Mitutoyo

Catalog No. US-1004



Measuring Instruments Catalog

Notes on Use

Export Compliance

All products in this catalog are subject to the Foreign Exchange and Foreign Trade Control laws of Japan, US Export Administration Regulations (EAR) or the Canadian Export and Import Permits Act. Re-export or relocation of any of these products may require prior approval by an appropriate governing authority. If a purchased product is exported or re-exported, even if it is not considered a regulated item by a governing authority, Mitutoyo would like to be made aware, as the customer service available for that product may be affected. If you have any questions, please consult your local Mitutoyo sales office.

Safety Caution

Carefully read the specifications and functions in this catalog before selecting products. Safety may be compromised if you use products for purposes other than those stated here.

Feel free to contact your nearest Mitutoyo sales center if you wish to use a product for other purposes or in a special environment.

Appearance and Specifications

Appearance and specifications are subject to change without prior notice for product improvement. The product names in this catalog are registered trademarks or trademarks of Mitutoyo or their respective companies.

Mitutoyo Precision Measuring Machines Trusted Throughout the World

Table of Contents

		Pages	
A	Measurement Data Management	A-1 – 20	
B	Micrometers	B-1 – 54	
	Micrometer Heads	B-55 – 76	
C	Holtests	C-1 – 10	
	Inside Micrometers	C-11 – 19	
	Bore Gages	C-20 – 30	
D	Calipers	D-1 – 35	
	Height Gages	D-36 – 49	
	Depth Gages	D-50 – 58	
E	Gage Blocks	E-1 – 24	
	Height Master	E-25 – 31	
	Reference Gages	E-32 – 44	
	Granite Surface Plates	E-44 – 46	
F	Digimatic Indicators	F-1 – 14	
	Dial Indicators	F-15 – 38	
	Dial Test Indicators	F-39 – 49	
	Thickness Gages	F-50 – 52	
	Other Gages	F-53 – 61	
	Stands	F-62 – 66	
G	Linear Gages	G-1 – 33	
	Laser Scan Micrometers	G-34 – 51	
			
H	Digimatic Scale Units	H-1 – 8	
	Linear Scales	H-9 – 35	
I	Profile Projectors	I-1 – 13	
	Microscopes	I-14 – 40	
J	Surftest	J-1 – 13	
	Formtracer	J-14 – 27	
	Contracer	J-28 – 38	
	Roundtest	J-39 – 54	
K	Hardness Testing Machines	K-1 – 8	
	Rockwell Hardness Testing Machines	K-9 – 12	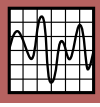
	Portable Hardness Testing Machines	K-13 – 17	
L	Coordinate Measuring Machines	L-1 – 15	
	Software and Probes	L-16 – 27	
	Accessories	L-28 – 29	
M	Vision Measuring Systems	M-1 – 19	
N	INDEX	N-1 – 14	

Mitutoyo

Mitutoyo North America Operations



Mitutoyo America Corporation
Corporate Headquarters
Aurora, Illinois USA

Aurora
965 Corporate Blvd
Aurora, IL 60502
M³ Solution Center
Calibration Lab
Mitutoyo Institute of Metrology
CT Lab
Repair and Field Service

Seattle

Los Angeles



Mitutoyo Mexico
Corporate Headquarters
Estado de Mexico, Mexico
(0155) 5312-5612

Mitutoyo America Corporation

Established in 1963, Mitutoyo America Corporation has locations all across the United States and Canada, including corporate offices, sales offices, M³ Solution Centers, calibration and repair laboratories, and research and development facilities. Mitutoyo America offers a full product line of precision measuring tools, instruments and equipment. Mitutoyo provides a comprehensive metrology organization, with dependable product and technical support, state-of-the-art calibration and repair services, unmatched education and training programs and cutting-edge research and development.

As the leading metrology company in the world, Mitutoyo is committed to future product development that applies breakthrough technologies to its full range of dimensional measurement tools, instruments and systems. With the belief that providing high-quality metrology goods and services to its customers will in turn, allow its customers to provide high-quality product to theirs, Mitutoyo continues to develop the most advanced and sophisticated metrology equipment available. **"Precision is our profession"** is not just the company motto, but also the principle by which every Mitutoyo employee stands when serving our customers.

M³ Solution Centers

Mitutoyo Tools and instruments can be seen and demonstrated conveniently at any one of nine Mitutoyo M³ Centers nationwide. These centers are fully equipped featuring operational models of the latest Mitutoyo tools and instruments. By appointment or walk-in basis, product demonstrations at M³ Solution Centers are carried out by our experienced, highly trained staff. Contact your Mitutoyo distributor or the Mitutoyo regional office near you for more information.

Mcube

*M³ = Mitutoyo, Measurement, Metrology



Mitutoyo Canada Inc.
Corporate Headquarters
Mississauga, Ontario Canada
(905) 821-1261



Birmingham
2100 Riverchase Ctr, Suite 106
Birmingham, AL 35244
M³ Solution Center



Boston
753 Forest Street, Suite 110
Marlborough, MA 01752
M³ Solution Center



Charlotte
11515 Vanstory Drive, Suite 140
Huntersville, NC 28078
M³ Solution Center



Cincinnati
6220 Hi-Tek Court
Mason, OH 45040
M³ Solution Center



Detroit
44768 Helm Street
Plymouth, MI 48170
M³ Solution Center



Houston
4560 Kendrick Plaza Dr., Suite 120
Houston, TX 77032
M³ Solution Center



Los Angeles
16925 East Gale Ave.
City of Industry, CA 91745
M³ Solution Center
CT Lab
Repair and Field Service



Seattle
1000 SW 34th Street
Renton, WA 98057
M³ Solution Center
CT Lab



Toronto
2121 Meadowvale Blvd.
Mississauga, Ontario Canada
L5N 5N1
M³ Solution Center
Calibration Laboratory
Repair and Field Service



Montréal
7075 Place, Robert-Joncas, Suite 129
Montreal, Quebec Canada
H4M 2Z2
M³ Solution Center
Repair and Field Service

Mitutoyo

Company Profile



Product Demonstration / Application Support (M³ Solutions Centers)

With several locations across North America, Mitutoyo's M³ Solutions Centers provide hands-on access to the full range of Mitutoyo precision tools and instruments, including the latest technologies Mitutoyo has to offer. Available to walk-ins or by appointment, highly trained and industry-experienced applications engineers will provide product demonstrations, answer questions and assist in the development of application-specific solutions. Contact your Mitutoyo distributor or the M³ Solutions Center in your area for additional information.

Sales Support / Customer Service

To ensure fast, dependable responses to all product-related questions and needs, Mitutoyo America Corporation's Sales Support group is available to assist with information on all Mitutoyo precision tools and instruments. Friendly, knowledgeable customer service representatives can provide product specifications, availability, and pricing, as well as recommend a local authorized Mitutoyo distributor.

Technical Support Services

Fast technical support for all Mitutoyo precision tools, instruments and software applications is available to distributors and customers though Mitutoyo's technical support services and is only a phone call away. Highly skilled engineers and technicians with knowledge of all Mitutoyo products can provide product information, answer technical questions, and offer application guidance. Contract programming and inspection services utilizing our most advanced technologies are also available.

Software Application Training

To maximize the value of Mitutoyo precision instrument purchases, Mitutoyo America Corporation provides customized training for all CMM, Vision, Form, and data management (MeasurLink) software applications it provides. Highly trained software instructors provide hands-on, one-on-one or group training with content appropriate for all customer needs. Training classes can be arranged at locations throughout North America.







Calibration Services

Mitutoyo America Corporation's calibration laboratory utilizes state-of-the-art technology to calibrate virtually any metrology tool. A2LA accredited (Certificate 0750.01) to ISO/IEC 17025 for testing and calibration labs, this facility employs professional calibration technicians to provide NIST-traceable accuracy certification, as well as calibration services for Mitutoyo and other manufacturer's gages and gage blocks. Canadian calibration laboratory is CLAS accredited to ISO/IEC 17025.

Field Service

Committed to ensuring value and longevity in its products, Mitutoyo America Corporation provides field service for all of its major measuring instrument products. A fully-staffed field service department arranges the installation, repair, and A2LA-accredited calibration (Certificate 1643.01) of Mitutoyo metrology instruments. Capable of certifying calibration on any service visit, Mitutoyo's accredited field service technicians get equipment back into production quickly. Service agreements are available at the time of equipment purchase. Canadian field service laboratory is CLAS accredited to ISO/IEC 17025.



Repair Services

Mitutoyo America Corporation's in-house repair facilities are capable of repairing the full range of Mitutoyo precision tools. Skilled technicians provide quality repairs backed by a full 90-day warranty on parts and labor. Repairs are done in either the Aurora, IL, facility or the City of Industry, CA, facility. Repair service is also available in Canada.

Parts Center

Mitutoyo America Corporation's parts center stocks more than 10,000 individual parts for Mitutoyo products. Same day and 24-hour shipping is available for most part requests. For CMM parts, a specialized group is available to provide additional CMM support services. A Mitutoyo product parts catalog is available on CD-ROM through the Parts Center or through a local Mitutoyo distributor.

Company Profile



Mitutoyo Institute of Metrology

The Mitutoyo Institute of Metrology provides training and metrology seminars on topics ranging from basic principles of metrology to advanced QC studies. The institute is a premier educational facility within the quality field with more than 5,000 students taking courses every year. Seminars are led by experienced, industry professionals at locations across the United States and Canada. Seminars can also be arranged for customers to be held at their own facilities. All courses are approved for CEU credits (Continuing Education Units).





CT Lab / MEI (R&D and Software Development)

Mitutoyo America's CTLabs and Micro Encoder Inc. are part of an international network of Mitutoyo research and development facilities charged with developing breakthrough technologies for the company's range of dimensional measurement tools, instruments and systems and for the advancement of the field of metrology. Highly skilled developers and engineers utilize cutting-edge development tools to produce the most advanced and sophisticated metrology software and equipment available. Mitutoyo America Corporation is a Microsoft® Gold Certified Partner, providing the entire organization access to a host of Microsoft® development tools and support, and ensuring that Mitutoyo software applications work reliably in Microsoft® OS and network environments.

Sales Solutions / System Design and Integration

Standard products alone cannot always solve our customers' measuring challenges. That is why we established an engineering group to integrate our equipment into application-engineered custom solutions. Called Sales Solutions, this group can create a solution as simple as fixturing. Other times, the answer may require integration of the latest metrology equipment, process control software and robotics to create an automated metrology cell. Whatever the level of complexity, for application and integration of measurement technologies simple or complex – proven or newly emerging – you can count on Sales Solutions to develop a plan to improve your process capability, productivity and bottom line.



Global Network

Following the establishment of MTI Corporation (U.S.) in 1963, Mitutoyo has been expanding its market throughout the world. Currently, the company has R&D, manufacturing, sales, and engineering service bases in 30 countries, as well as network of distributors in some 80 countries. Mitutoyo maintains its rock-solid status as a leading global manufacturer providing services tailored to each regional society.


Sendai Sales Office


Utsunomiya Sales Office


Suwa Sales Office


Osaka Sales Office


Fukuoka Sales Office


Kawasaki Plant


Tsukuba Laboratory


Utsunomiya Operations


Gohara Production Department


Kiyohara Production Department


Kure Production Department


Nakatsugawa Plant


Miyazaki Plant


Shiwa Production Department



- Global Headquarters
- Sales
- Service Center
- Calibration Center
- M³ Solution Center
- Mitutoyo Institute of Metrology
- Research and Development Facility
- Manufacturing Facility

Headquarters
TEL (044) 813-8201 FAX (044) 813-8210

Sales

Sendai Sales Office
TEL (022) 231-6881 FAX (022) 231-6884
Koriyama Resident Office TEL (024) 931-4331

Utsunomiya Sales Office
TEL (028) 660-6240 FAX (028) 660-6248
Tsukuba Resident Office TEL (029) 839-9139

Isesaki Sales Office
TEL (0270) 21-5471 FAX (0270) 21-5613
Niigata Resident Office TEL (025) 281-4360
Saitama Resident Office TEL (048) 667-1431

Kawasaki Sales Office
TEL (044) 813-1611 FAX (044) 813-1610
Tokyo Resident Office TEL (03) 3452-0481

Atsugi Sales Office
TEL (046) 226-1020 FAX (046) 229-5450
Fuji Resident Office TEL (0545) 55-1677

Suwa Sales Office
TEL (0266) 53-6414 FAX (0266) 58-1830
Ueda Resident Office TEL (0268) 26-4531

Hamamatsu Sales Office
TEL (053) 464-1451 FAX (053) 464-1683

Anjo Sales Office
TEL (0566) 98-7070 FAX (0566) 98-6761

Nagoya Sales Office
TEL (052) 741-0382 FAX (052) 733-0921

Kanazawa Sales Office
TEL (076) 222-1160 FAX (076) 222-1161

Osaka Sales Office
TEL (06) 6613-8801 FAX (06) 6613-8817
Kobe Resident Office TEL (078) 924-4560

Keiji Sales Office
TEL (077) 569-4171 FAX (077) 569-4172

Okayama Sales Office
TEL (086) 242-5625 FAX (086) 242-5653

Hiroshima Sales Office
TEL (082) 427 -1161 FAX (082) 427-1163

Fukuoka Sales Office
TEL (092) 411-2911 FAX (092) 473-1470

Service Centers

Techno-Service Business Division
TEL (044) 813-8213 FAX (044) 822-4136

Utsunomiya Service Center
TEL (028) 660-6280 FAX (028) 660-6257

Yokohama Service Center
TEL (045) 938-5718 FAX (045) 938-5721

Suwa Service Center
TEL (0266)53-5495 FAX (0266)58-1830

Nagoya Service Center
TEL (052) 731-7100 FAX (052) 731-6110

Anjo Service Center
TEL (0566) 96-0745 FAX (0566) 96-0747

Osaka Service Center
TEL (06) 6613-8813 FAX (06) 6613-8818

Hiroshima Service Center
TEL (082) 427-1164 FAX (082) 427-1163

Fukuoka Service Center
TEL (092) 411-2909 FAX (092) 482-7894

Seismic monitoring system Service Section
Testing machine Service Section
TEL (045) 938-5718 FAX (045) 938-5721

Overseas Service Support Section
TEL (044) 813-8247 FAX (044) 822-4136

Calibration Centers

Utsunomiya Measurement Standards Calibration Center
TEL (028) 656-1432 FAX (028) 656-8443

Kawasaki Calibration Center
TEL (044) 813-8214 FAX (044) 813-8223

Hiroshima Calibration Center
TEL (0823) 70-3820 FAX (0823) 70-3833

M³ Solution Centers

UTSUNOMIYA
TEL (028) 660-6240 FAX (028) 660-6248

TOKYO
TEL (044) 813-1611 FAX (044) 813-1610

SUWA
TEL (0266) 53-6414 FAX (0266) 58-1830

ANJO
TEL (0566) 98-7070 FAX (0566) 98-6761

OSAKA
TEL (06) 6613-8801 FAX (06) 6613-8817

HIROSHIMA
Please contact to M³ Solution Center FUKUOKA.
Or Please contact to Hiroshima Sales Office.

FUKUOKA
TEL (092) 411-2911 FAX (092) 473-1470

Mitutoyo Metrology Institute

Mitutoyo Metrology Institute (Tokyo)
TEL (044) 822-4124 FAX (044) 822-4000

Mitutoyo Metrology Institute (Osaka)
TEL (06) 6613-8810 FAX (06) 6613-8821

Research and Development Facilities

Tsukuba Laboratory
TEL (029) 839-1022 FAX (029) 839-1023

Research & Development Division
TEL (044) 822-4137 FAX (044) 822-4127

Manufacturing Facilities

Kawasaki Plant Production Department
TEL (044) 822-4132 FAX (044) 844-9835

Utsunomiya Operations Production Department 1
TEL (028) 656-1117 FAX (028) 656-2164

Utsunomiya Operations Production Department 2
TEL (028) 656-1309 FAX (028) 656-2164

Utsunomiya Operations Kiyohara Production Department
TEL (028) 667-4811 FAX (028) 667-4810

Nakatsugawa Plant Production Department
TEL (0573) 68-8201 FAX (0573) 68-8210

Hiroshima Operations Kure Production Department
TEL (0823) 71-6111 FAX (0823) 73-2193

Hiroshima Operations Shiwa Production Department
TEL (082) 433-2077 FAX (082) 433-2695

Hiroshima Operations Gohara Production Department
TEL (0823) 77-1721 FAX (0823) 77-1724

Miyazaki Plant
TEL (0985) 86-2591 FAX (0985) 86-0827

Onomi Plant
TEL (0889) 57-2036 FAX (0889) 57-2178

Mitutoyo

Global Network

Headquarters (Overseas Sales Division)
20-1, Sakado 1-chome, Takatsu-ku, Kawasaki-shi
213-8533
TEL: 81(044)813-8201 FAX: 81(044)813-8210

Europe
Mitutoyo Europe GmbH
Borsigstrasse 8-10, 41469 Neuss, GERMANY
TEL: 49(2137)102-0 FAX: 49(2137)102-351


Mitutoyo Europe GmbH

Mitutoyo CTL Germany GmbH
Neckarstrasse 1/8, 78727 Oberndorf, GERMANY
TEL: 49(7423)8776-0 FAX: 49(7423)8776-99


Mitutoyo Research Center Europe B.V.

KOMEG Industrielle Messtechnik GmbH
Zum Wasserwerk 3 66333 Völklingen, GERMANY
TEL: 49(6898)91110 FAX: 49(6898)9111100

Germany
Mitutoyo Deutschland GmbH
Borsigstrasse 8-10, 41469 Neuss, GERMANY
TEL: 49(2137)102-0 FAX: 49(2137)86 85
M³ Solution Center Hamburg
Tempowerkring 9·im HIT-Technologiepark 21079
Hamburg, GERMANY
TEL: 49(40)791894-0 FAX: 49(40)791894-50
M³ Solution Center Berlin
Paradiesstrasse 208, 12526 Berlin, GERMANY
TEL: 49(30)2611 267 FAX: 49(30)26 29 209
M³ Solution Center Eisenach
im tbz Eisenach, Heinrich-Ehrhardt-Platz, 99817
Eisenach, GERMANY
TEL: 49(3691)88909-0 FAX: 49(3691)88909-9
M³ Solution Center Ingolstadt
Marie-Curie-Strasse 1A, 85055 Ingolstadt, GERMANY
TEL: 49(841)954920 FAX: 49(841)9549250
M³ Solution Center Leonberg
Steinbeisstrasse 2, 71229 Leonberg, GERMANY
TEL: 49(7152)6080-0 FAX: 49(7152)608060
Mitutoyo-Messgeräte Leonberg GmbH
Heidenheimer Strasse 14, 71229 Leonberg, GERMANY
TEL: 49(7152)9237-0 FAX: 49(7152)9237-29

U.K.
Mitutoyo (UK) Ltd.
Joule Road, West Point Business Park, Andover,
Hampshire SP10 3UX UNITED KINGDOM
TEL: 44(1264)353123 FAX: 44(1264)354883


Mitutoyo (UK) L.td.

M³ Solution Center Coventry
Unit6, Banner Park, Wickmans Drive, Coventry,
Warwickshire CV4 9XA, UNITED KINGDOM
TEL: 44(2476)426300 FAX: 44(2476)426339
M³ Solution Center Halifax
Lowfields Business Park, Navigation Close, Elland,
West Yorkshire HX5 9HB, UNITED KINGDOM
TEL: 44(1422)375566 FAX: 44(1422)328025
M³ Solution Center East Kilbride
The Baird Bulding, Rankine Avenue, Scottish Enterprise
Technology Park, East Killbride G75 0QF,
UNITED KINGDOM
TEL: 44(1355)581170 FAX: 44(1355)581171

France
Mitutoyo France
Paris Nord 2-123 rue de la Belle Etoile, BP 59267 ROISSY
EN FRANCE 95957 ROISSY CDG CEDEX, FRANCE
TEL: 33(1) 49 38 35 00 FAX: 33(1) 48 63 27 70


Mitutoyo France S.A.R.L

M³ Solution Center LYON
Parc Mail 523, cours du 3éme millénaire, 69791
Saint-Priest Cedex, FRANCE
TEL: 33(1) 49 38 35 70 FAX: 33(1) 49 38 35 79
M³ Solution Center STRASBOURG
Parc de la porte Sud, Rue du pont du péage, 67118
Geispolsheim, FRANCE
TEL: 33(1) 49 38 35 80 FAX: 33(1) 49 38 35 89
M³ Solution Center CLUSES
Espace Scionzier 480 Avenue, des Lacs, 74950
Scionzier, FRANCE
TEL: 33(1) 49 38 35 90 FAX: 33(1) 49 38 35 99
M³ Solution Center TOULOUSE
Aeroparc Saint-Martin ZAC de Saint Martin du Touch, 12
rue de Caulet, Cellule B08, 31300 TOULOUSE, FRANCE
TEL: 33(5) 82 95 60 69

Italy
Mitutoyo ITALIANA S.r.l.
Corso Europa, 7 - 20020 Lainate (MI), ITALY
TEL: 39(02)935781 FAX: 39(02)9373290•93578255


Mitutoyo Italiana S.R.L

M³ Solution Center TORINO
Via Brandizzo, 133/F - 10088 Volpiano (TO), ITALY
TEL: 39(0)11 9123995 FAX: 39(0)11 9953202
M³ Solution Center CHIETI
Contrada Santa Calcagna - 66020 Rocca S. Giovanni (CH),
ITALY
TEL/FAX: 39(0872)709217

Netherlands
Mitutoyo Nederland B.V.
Storkstraat 40, 3905 KX Veenendaal, THE NETHERLANDS
TEL: 31(0)318-534911 FAX: 31(0)318-534811


Mitutoyo Nederland B.V.

Mitutoyo Research Center Europe B.V.
De Rijn 18, 5684 PJ Best, THE NETHERLANDS
TEL: 31(0)499-320200 FAX: 31(0)499-320299

Belgium
Mitutoyo Belgium N.V.
Hogenakkerhoek straat 8, 9150 Kruibeke, BELGIUM
TEL: 32(0)3-2540444 FAX: 32(0)3-2540445


Mitutoyo Belgium N.V.

Sweden
Mitutoyo Scandinavia AB
Släntvägen 6, 194 54 Upplands Väsby, SWEDEN
TEL: 46(0)8 594 109 50 FAX: 46(0)8 590 924 10
M³ Solution Center Alingsas
Kristineholmsvägen 26, 441 39 Alingsas, SWEDEN
TEL: 46(0)8 594 109 50 FAX: 46(0)322 63 31 62
M³ Solution Center Värnamo
Storgatsbacken 9, 331 30 Värnamo, SWEDEN
TEL: 46(0)8 594 109 50 FAX: 46(0)370 463 34


Mitutoyo Scandinavia AB

Finland
Mitutoyo Scandinavia Aktiebolag Finnish Branch
Viherkiitäjä 2A, FI-33960, Pirkkala, FINLAND
TEL: 358 207 929 640

Switzerland
Mitutoyo Schweiz AG
Steinackerstrasse 35, 8902 Urdorf, SWITZERLAND
TEL: 41(0)447361150 FAX: 41(0)447361151


Mitutoyo Schweiz AG

Poland
Mitutoyo Polska Sp.z o.o.
Ul.Graniczna 8A 54-610 Wroclaw, POLAND
TEL: 48(71)354 83 50 FAX: 48(71)354 83 55


Mitutoyo Polska Sp.Z o.o.

Czech Republic
Mitutoyo Cesko, s.r.o.
Dubska 1626, 415 01 Teplice, CZECH REP
TEL: 420-417-579-866 FAX: 420-417-579-867


Mitutoyo Cesko, s.r.o.

Hungary
Mitutoyo Hungária Kft.
Záhony utca 7, D-building /Groundfloor, H-1031
Budapest, HUNGARY
TEL: 36(1)2141447 FAX: 36(1)2141448


Mitutoyo Hungária Kft.

Romania
Mitutoyo Romania SRL
1A Drumul Garii Odai Street, showroom, Ground Floor,
OTOPENI-ILFOV, ROMANIA
TEL: 40(0)311012088 FAX: 40(0)311012089

Russian Federation
Mitutoyo RUS LLC
13 Sharikopodshipnikovskaya, bld.2, 115088 Moscow,
RUSSIAN FEDERATION
TEL: (7)495 7450752 FAX: (7)495 7450752

Austria
Mitutoyo Austria GmbH
Johann Roithner Straße 131 A-4050 Traun, AUSTRIA
TEL: 43(0)7229/23850 FAX: 43(0)7229/23850-90

Singapore
Mitutoyo Asia Pacific Pte. Ltd.
Head Office / M³ Solution Center
24 Kallang Avenue, Mitutoyo Building, SINGAPORE
339415
TEL: (65)6294 2211 FAX: (65)6299 6666


Mitutoyo Asia Pacific Pte. Ltd.
Regional Headquarters

Malaysia
Mitutoyo (Malaysia) Sdn. Bhd.
Kuala Lumpur Head Office / M³ Solution Center
Mah Sing Intergrated Industrial Park, 4, Jalan Utarid
U5/14, Section U5, 40150 Shah Alam, Selangor,
MALAYSIA
TEL: (60)3-7845 9318 FAX: (60)3-7845 9346


Mitutoyo (Malaysia) Sdn. Bhd.

Penang Branch office / M³ Solution Center
30, Persiaran Mahsuri 1/2, Sunway Tunas, 11900 Bayan
Lepas, Penang, MALAYSIA
TEL: (60)4-641 1998 FAX: (60)4-641 2998
Johor Branch office / M³ Solution Center
70 (Ground Floor), Jalan Molek 1/28, Taman Molek,
81100 Johor Bahru, Johor, MALAYSIA
TEL: (60)7-352 1626 FAX: (60)7-352 1628

Indonesia
PT. Mitutoyo Indonesia
Head Office / M³ Solution Center
Jalan Sriwijaya No.26 Desa cibatu Kec. Cikarang Selatan
Kab. Bekasi 17530, INDONESIA
TEL: (62)21-2962 8600 FAX: (62)21-2962 8604


PT. Mitutoyo Indonesia

Thailand
Mitutoyo (Thailand) Co., Ltd.
Bangkok Head Office / M³ Solution Center
76/3-5, Chaengwattana Road, Kwaeng Anusaowaree,
Khet Bangkaen, Bangkok 10220, THAILAND
TEL: (66)2-521 6130 FAX: (66)2-521 6136


Mitutoyo (Thailand) Co., Ltd.

Cholburi Branch / M³ Solution Center
7/1, Moo 3, Tambon Bowin, Amphur Sriracha, Cholburi
20230, THAILAND
TEL: (66)3-834 5783 FAX: (66)3-834 5788
Amata Nakorn Branch / M³ Solution Center
700/199, Moo 1, Tambon BanKao, Amphur PhanThong,
Cholburi 20160, THAILAND
TEL: (66)3-846 8976 FAX: (66)3-846 8978

Vietnam
Mitutoyo Vietnam Co., Ltd.
Hanoi Head Office / M³ Solution Center
No. 07-TT4, My Dinh - Me Tri Urban Zone, My Dinh 1
Ward, Nam Tu Liem District, Hanoi, VIETNAM
TEL: (84)4-3768 8963 FAX: (84)4-3768 8960
Ho Chi Minh City Branch Office /
M³ Solution Center
31 Phan Xich Long Street, Ward 2, Phu Nhuan District,
Ho Chi Minh City, VIETNAM
TEL: (84)8-3517 4561 FAX: (84)8-3517 4582

Global Network



Mitutoyo Vietnam Co., Ltd.

Philippines

Mitutoyo Philippines, Inc.
Unit 2103, Bldg 2 GMV Center, 107 North Main Avenue,
Laguna Technopark, Binan, Laguna 4028, PHILIPPINES
TEL/FAX: 63 49 544 0272

India

Mitutoyo South Asia Pvt. Ltd.
Head Office / M³ Solution Center
C-122, Okhla Industrial Area, Phase-I,
New Delhi-110 020, INDIA
TEL:91(11)2637-2090 FAX:91(11)2637-2636
MSA Gurgaon technical center



Mitutoyo South Asia Pvt. Ltd.

Plot No. 65, Phase-IV, Udyog Vihar,
Gurgaon – 122016, INDIA
TEL:(91)0124-2340294
Mumbai Region Head office
303, Sentinel Hiranandani Business Park Powai,
Mumbai-400 076, INDIA
TEL:91(22)2570-0684, 837, 839 FAX:91(22)2570-0685
Pune Office / M³ Solution Center
G2/G3, Pride Kumar Senate, F.P. No. 402 Off. Senapati
Bapat Road, Pune-411 016, INDIA
TEL:91(20)6603-3643, 45, 46 FAX:91(20)6603-3644
Vadodara office
S-1&S-2, Olive Complex, Nr. Haveli, Nizampura,
Vadodara-390 002, INDIA
TEL: (91) 265-2750781 FAX: (91) 265-2750782
Bengaluru Region Head office / M³ Solution Center
No. 5, 100 Ft. Road, 17th Main, Koramangala, 4th Block,
Bengaluru-560 034, INDIA
TEL:91(80)2563-0946, 47, 48 FAX:91(80)2563-0949
Chennai Office / M³ Solution Center
No. 624, Anna Salai Teynampet, Chennai-600 018, INDIA
TEL:91(44)2432-8823, 24, 27, 28 FAX:91(44)2432-8825
Kolkata Office
Unit No. 1208, Om Tower, 32, J.L.Nehru Road,
Kolkata-700 071, INDIA
TEL:(91)33-22267088/40060635 FAX:(91)33-22266817

Taiwan

Mitutoyo Taiwan Co., Ltd. / M³ Solution Center Taipei
4F., No.71, Zhouzi St., Neihu Dist., Taipei City 114, TAIWAN(R.O.C.)
TEL:886(2)5573-5902 FAX:886(2)8752-3267



Mitutoyo Taiwan Co., Ltd.

Taichung Branch / M³ Solution Center Taichung
1F., No.758, Zhongming S. Rd., South Dist., Taichung City
402, TAIWAN(R.O.C.)
TEL:886(4)2262-9188 FAX:886(4)2262-9166
Kaohsiung Branch / M³ Solution Center Kaohsiung
13F.-3, No.31, Haibian Rd., Lingya1 Dist.,
Kaohsuung City 802, TAIWAN(R.O.C.)
TEL:886(7)334-6168 FAX:886(7)334-6160

South Korea

Mitutoyo Korea Corporation
Head Office / M³ Solution Center
(Sanbon-dong, Geumjeong high view Build.), 6F, 153-8,
Ls-ro, Gunpo-si, Gyeonggi-do, 15808 KOREA
TEL: 82(31)361-4200 FAX: 82(31)361-4201
Busan Office / M³ Solution Center
(3150-3, Daejeo 2-dong) 8, Yutongdanji 1-ro 49beon-gil,
Gangseo-gu, Busan, 46721 KOREA
TEL: 82(51)718-2140 FAX: 82(51)324-0104



Mitutoyo Korea Corporation

Daegu Office / M³ Solution Center
(Galsan-dong, Daegu Business Center), 301-Ho, 217,
Seongseogongdan-ro, Dalseo-gu, Daegu 42704 KOREA
TEL: 82(53)593-5602 FAX: 82(53)593-5603

China

Mitutoyo Measuring Instruments (Shanghai) Co., Ltd.
12F, Nextage Business Center, No.1111, Pudong South
Road, Pudong New District, Shanghai 200120, CHINA
TEL: 86(21)5836-0718 FAX: 86(21)5836-0717



Mitutoyo Measuring Instruments
(Shanghai) Co., Ltd.

Suzhou Office / M³ Solution Center China (Suzhou)
No. 46 Baiyu Road, Suzhou 215021, CHINA
TEL: 86(512)6522-1790 FAX: 86(512)6251-3420
Wuhan Office
RM. 1701, Wuhan Wanda Center, No. 96, Linjiang Road,
Wuchang District, Wuhan Hubei 430060, CHINA
TEL: 86(27)8544-8631 FAX: 86(27)8544-6227



Mitutoyo Measuring
Instruments (Suzhou) Co., Ltd.

Chengdu Office
1-705, New Angle Plaza, 668# Jindong Road,
Jinjiang District, Chengdu, Sichuan 610066, CHINA
TEL: 86(28)8671-8936 FAX: 86(28)8671-9086
Hangzhou Office
RM.804, Eastern International Business Center Building 1,
No.600 Jinsha Road Hangzhou Economic and
Technological Development Zone, 310018, CHINA
TEL: 86(571)8288-0319 FAX: 86(571)8288-0320
Tianjin Office / M³ Solution Center Tianjin
RM. A+B+C 15/F, TEDA Building, No.256 Jie-fang Nan
Road Hexi District, Tianjin 300042, CHINA
TEL: 86(22)5888-1700 FAX: 86(22)5888-1701



Tianjin Office

Changchun Office
RM.1801, Kaifa Dasha,No. 5188 Ziyou Avenue,
Changchun 130013, CHINA
TEL: 86(431)84612510 FAX: 86(431)84644411
Qingdao Office / M³ Solution Center Qingdao
Room 638, 6F, No.192 Zhengyang Road, Chengyang
District, Qingdao, Shandong, 266109, CHINA
TEL: 86(532)80961936 FAX: 86(532)80961937
Xi'an Office
RM. 805, Xi'an International Trade Center, No. 196
Xiaozhai East Road, Xi'an, 710061, CHINA
TEL: 86(29)85381380 FAX: 86(29)85381381
Dalian Office
RM.1008, Grand Central IFC, No.128 Jin ma Road,
Economic Development Zone,Dalian 116600, CHINA
TEL: 86(411)8718 1212 FAX: 86(411)8754-7587
Zhengzhou Office
Room1801,18/F,Unit1,Building No.23, Shangwu Inner
Ring Road, Zhengdong New District,Zhengzhou City,
Henan Province, 450018, CHINA
TEL: 86(371)6097-6436 FAX:86(371)6097-6981
Mitutoyo Leeport Metrology (Hong Kong) Limited
Room 818, 8/F, Vanta Industrial Centre, No.21-33,
Tai Lin Pai Road, Kwai Chung, NT, HONG KONG
TEL: (852)2992-2088 FAX: (852)2670-2488
Mitutoyo Leeport Metrology (Dongguan) Limited / M³ Solution Center Dongguan
No.26, Guang Chang Road, Chong Tou Zone,
Chang An Town, Dongguan, 523855, CHINA
TEL: 86(769)8541 7715 FAX: 86(769)-8541 7745
Mitutoyo Leeport Metrology (Dongguan) Limited – Fuzhou office
Rm 2104, City Commercial Centre, No.129 Wu Yi Road
N., Fuzhou City, Fujian Province, CHINA
TEL: (86) 591 8761 8095 FAX: (86) 591 8761 8096
Mitutoyo Leeport Metrology (Dongguan) Limited – Changsha office
Rm 2207, Shiner International Plaza, No. 88, Kaiyuan
Middle Road, Changsha City, Hunan Province, CHINA
TEL: (86) 731 8401 9276 FAX: (86) 731 8401 9376
Mitutoyo Measuring Instruments (Suzhou) Co., Ltd.
No. 46 Baiyu Road, Suzhou 215021, CHINA
TEL: 86(512)6252-2660 FAX: 86(512)6252-2580

U.S.A.

Mitutoyo America Corporation
965 Corporate Blvd., Aurora, IL 60502, U.S.A.
TEL: 1-(630)-820-9666 Toll Free No. 1-888-648-8869



Mitutoyo America Corporation
Head Office

M³ Solution Center-Illinois
965 Corporate Blvd., Aurora, IL 60502, U.S.A.
Toll Free No. 1-888-648-8869
M³ Solution Center-Ohio
6220 Hi-Tek Ct., Mason, OH 45040, U.S.A.
Toll Free No. 1-888-648-8869
M³ Solution Center-Michigan
44768 Helm Street, Plymouth, MI 48170, U.S.A.
Toll Free No. 1-888-648-8869
M³ Solution Center-California
16925 E. Gale Ave., City of Industry, CA 91745, U.S.A.
Toll Free No. 1-888-648-8869
M³ Solution Center-Massachusetts
753 Forest Street, Suite 110, Marlborough, MA 01752, U.S.A.
Toll Free No. 1-888-648-8869
M³ Solution Center-North Carolina
11515 Vanstory Dr., Suite 150, Huntersville, NC 28078, U.S.A.
Toll Free No. 1-888-648-8869
M³ Solution Center-Alabama
2100 Riverchase Center Suite 106 Hoover, AL 35244, U.S.A.
Toll Free No. 1-888-648-8869
M³ Solution Center-Washington
1000 SW 34th Street Suite G, Renton WA 98057, U.S.A.
Toll Free No. 1-888-648-8869
M³ Solution Center-Texas
4560 Kendrick Plaza Drive Suite 120, Houston, TX 77032, U.S.A.
Toll Free No. 1-888-648-8869
Mitutoyo America Corporation Calibration Lab
965 Corporate Blvd., Aurora, IL 60502, U.S.A.
Toll Free No. 1-888-648-8869
Micro Encoder, Inc.
11533 NE 118th St., bldg. M, Kirkland, WA 98034, U.S.A.
TEL: 1-(425)-821-3906
Micro Encoder Los Angeles, Inc.
16925 E. Gale Ave. City of Industry, CA 91745, U.S.A.
TEL: 1-626-961-9661

Canada

Mitutoyo Canada Inc.
2121 Meadowvale Blvd., Mississauga, Ont. L5N 5N1.,
CANADA
TEL: 1-(905)821-1261 FAX: 1-(905)821-4968



Mitutoyo Canada Inc.

Montreal Office
7075 Place Robert-Joncas Suite 129, Montreal,
Quebec H4M 2Z2, CANADA
TEL: 1-(514)337-5994 FAX: 1-(514)337-4498

Argentina

Mitutoyo Sul Americana Ltda.
Argentina Branch
Av. B. Mitre 891/899 – C.P. (B1603CQI) Vicente
López –Pcia. Buenos Aires – ARGENTINA
TEL: 54(11)4730-1433 FAX: 54(11)4730-1411



Mitutoyo Sul Americana Ltda.
Argentina Branch

Sucursal Cordoba
Av. Amadeo Sabattini, 1296, esq. Madrid
B° Crisol Sur – CP 5000, Cordoba, ARGENTINA
TEL/FAX: 54 (351) 456-6251

Brazil

Mitutoyo Sul Americana Ltda.
AV. Joao Carlos da Silva Borges, 1240 - CEP 04726-002
- Santo Amaro - São Paulo - SP, BRASIL
TEL: 55(11)5643-0000 FAX: 55(11)5641-3722



Mitutoyo Sul Americana Ltda.
Factory (Suzano)

Regional Office
Belo Horizonte - MG
TEL: 55(31)3531-5511 FAX: 55(31)3594-4482
Rio Grande do Sul / PR, SC
TEL/FAX: 55(51)3342-1498 TEL: 55(51)3337-0206
Rio de Janeiro - RJ
TEL: 55(21)3333-4899 TEL/FAX: 55(21)2401-9958
Santa Barbara D'Oeste - SP
TEL: 55(19)3455-2062 FAX: 55(19)3454-6103
Norte, Nordeste, Centro Oeste
TEL: 55(11)5643-0060 FAX: 55(11)5641-9029
Escritorio BA / SE
TEL/FAX: 55(71)3326-5232
Factory(Suzano)
Rodovia Indio Tibirica 1555, BAIRRO RAFFO,
CEP 08620-000, SUZANO-SP, BRASIL
TEL: 55(11)4746-5858 FAX: 55(11)4746-5936

Mexico

Mitutoyo Mexicana S. A. de C. V.
Prolongación Industria Eléctrica No. 15 Parque Industrial
Naucalpan, Naucalpan de Juárez, Estado de México
C.P. 53370, MÉXICO



Mitutoyo Mexicana S.A. de C.V

TEL: 52 (01-55) 5312-5612
Monterrey Office / M³ Solution Center
Av. Morones Prieto No 914. Oriente Local, 105 Plaza Matz
Col. La Huerta, C.P. 67140 Guadalupe, N.L., MÉXICO
TEL: 52 (01-81) 8398-8227, 8398-8228, 8398-8244,
8398-8245 and 8398-8246
FAX: 52 (01-81) 8398-8245
Tijuana Office / M³ Solution Center
Av. 2o. eje Oriente-Poniente No. 19075 Int. 18
Col. Cd. Industrial Nueva Tijuana
C.P. 22500 Tijuana, B. C., MÉXICO
TEL: 52 (01-664) 647- 5024
Querétaro Office / M³ Solution Center
Av. Constituyentes Ote. 71-B,
Fraccionamiento Observatorio
C.P. 76040 Querétaro, Qro. MÉXICO
TEL: 52 (01-442) 340-8018, 340-8019 and 340-8020
FAX: 52 (01-442) 340-8017
Aguascalientes Office / M³ Solution Center
Av. Aguascalientes No. 622, Local 15 Centro Comercial
El Cilindro, Fracc. Pulgas Pandas Norte, C.P. 20138
Aguascalientes Ags, MÉXICO
TEL: 52 (01-449) 174-4140 and 174-4143
Irapuato Office / M³ Solution Center Irapuato
Boulevard a Villas de Irapuato No. 1460 L.1 Col. Ejido
Irapuato C.P. 36643 Irapuato, Gto., MÉXICO
TEL: 52 (01-462) 144-1200 and 144-1400

Mitutoyo

Meaning of Symbols

ABSOLUTE™

ABSOLUTE is a trademark of Mitutoyo Corporation.

ABSOLUTE Linear Encoder

This is an electronic measuring scale that provides a direct readout of absolute linear position when switched on, without needing to be zeroed or reset. Electrostatic, electromagnetic and a combination of electrostatic and optical methods are used in implementing this capability but the key feature is Mitutoyo's patented technology of building absolute positional information into the scale so it can be read at start up. These linear encoders are widely used in Mitutoyo's measuring instruments as the in-built length standard and their use greatly contributes to the generation of highly reliable measurement data, particularly in harsh environments where contamination by cutting fluids, coolants and dust must not affect performance.

Advantages:

1. No count error occurs even if you move the slider or spindle extremely rapidly.
2. You do not have to reset the system to zero when turning on the system after turning it off*1.
3. As this type of encoder can drive with less power than the incremental encoder, the battery life is prolonged to about 3.5 years (continuous operation of 20,000 hours)*2 under normal use.

*1: Unless the battery is removed.
*2: In the case of the ABSOLUTE Digimatic caliper (electrostatic capacitance model).

IP65

IP66

IP67

IP is a trademark of Mitutoyo Corporation.

IP Codes

These codes indicate the degree of protection provided (by an enclosure) for the electrical function of a product against the ingress of foreign bodies, dust and water as defined in IEC standards (IEC 60529: 2001) and JIS C 0920: 2003.
[IEC: International Electrotechnical Commission]

First characteristic numeral	Degrees of protection against solid foreign objects	
	Brief description	Definition
0	Unprotected	—
1	Protected against solid foreign objects of Sø50mm and greater	A Sø50mm object probe shall not fully penetrate enclosure*
2	Protected against solid foreign objects of Sø12.5mm and greater	A Sø12.5mm object probe shall not fully penetrate enclosure*
3	Protected against solid foreign objects of Sø2.5mm and greater	A Sø2.5mm object probe shall not fully penetrate enclosure*
4	Protected against solid foreign objects of Sø1.0mm and greater	A Sø1.0mm object probe shall not fully penetrate enclosure*
5	Protected against dust	Ingress of dust is not totally prevented, but dust that does penetrate must not interfere with satisfactory operation of the apparatus or impair safety.
6	Dust-proof	No ingress of dust allowed.

*: For details of the test conditions used in evaluating each degree of protection, please refer to the original standard.

Second characteristic numeral	Degrees of protection against water	
	Brief description	Definition
0	Unprotected	—
1	Protected against vertical water drops	Vertically falling water drops shall have no harmful effects.
2	Protected against vertical water drops within a tilt angle of 15 degrees	Vertically falling water drops shall have no harmful effects when the enclosure is tilted at any angle up to 15° on either side of the vertical.
3	Protected against spraying water	Water sprayed at an angle up to 60° either side of the vertical shall have no harmful effects.
4	Protected against splashing water	Water splashed against the enclosure from any direction shall have no harmful effects.
5	Protected against water jets	Water projected in jets against the enclosure from any direction shall have no harmful effects.
6	Protected against powerful water jets	Water projected in powerful jets against the enclosure from any direction shall have no harmful effects.
7	Protection against water penetration	Ingress of water in quantities causing harmful effects shall not be possible when the enclosure is temporarily immersed in water under standardized conditions of pressure and time.
8	Protected against the effects of continuous immersion in water	Ingress of water in quantities causing harmful effects shall not be possible when the enclosure is continuously immersed in water under conditions which shall be agreed between manufacturer and user but which are more severe than for IPX7.

TÜVRheinland CERTIFIED
www.tuv.com
ID 0000006683

About the TÜV Rheinland certification marks

All products with the marks shown on the left have passed the IP test carried out by the German accreditation organization, TÜV Rheinland.

Mitutoyo guarantees the product quality
PROPRIETARY INSPECTION CERTIFICATE

Measuring Instruments Shipped with Inspection Certificate

Mitutoyo guarantees product quality as a leading precision measuring instrument manufacturer and ships measuring instruments with an inspection certificate that includes inspection data so that customers can use them with confidence.

*For the meaning of inspection marks shown at the left, refer to the detailed description of each product.

Mitutoyo CALIBRATION SERVICES

Accredited Calibration Certificates

Mitutoyo America offers calibration services accredited to ISO/IEC 17025 by A2LA for almost all products we sell (additional fees may apply). In addition to our world class calibration laboratory (A2LA Certificate 0750.01) we also offer field calibrations for many products (A2LA Certificate 1643.01).

Main Unit Startup System

Installation of Main Unit Startup System

As a part of the enhancement of our export control system, the large CNC measuring machines (all the CNC Coordinate Measuring Machines, Vision Measuring Systems, and Form Measuring Machines) are now equipped with a Main Unit Startup System (relocation detecting system) before export.
This system is designed to take a machine out of operation upon detecting the mechanical shock that accompanies relocation. If you intend to relocate a measuring machine fitted with this system, please contact us beforehand so that our service engineers can assist you.
On the other hand, the system may be triggered in the event of a natural event such as a powerful earthquake. In this case, our service engineers will deal with the situation at the earliest opportunity.

Traceability Mitutoyo North America

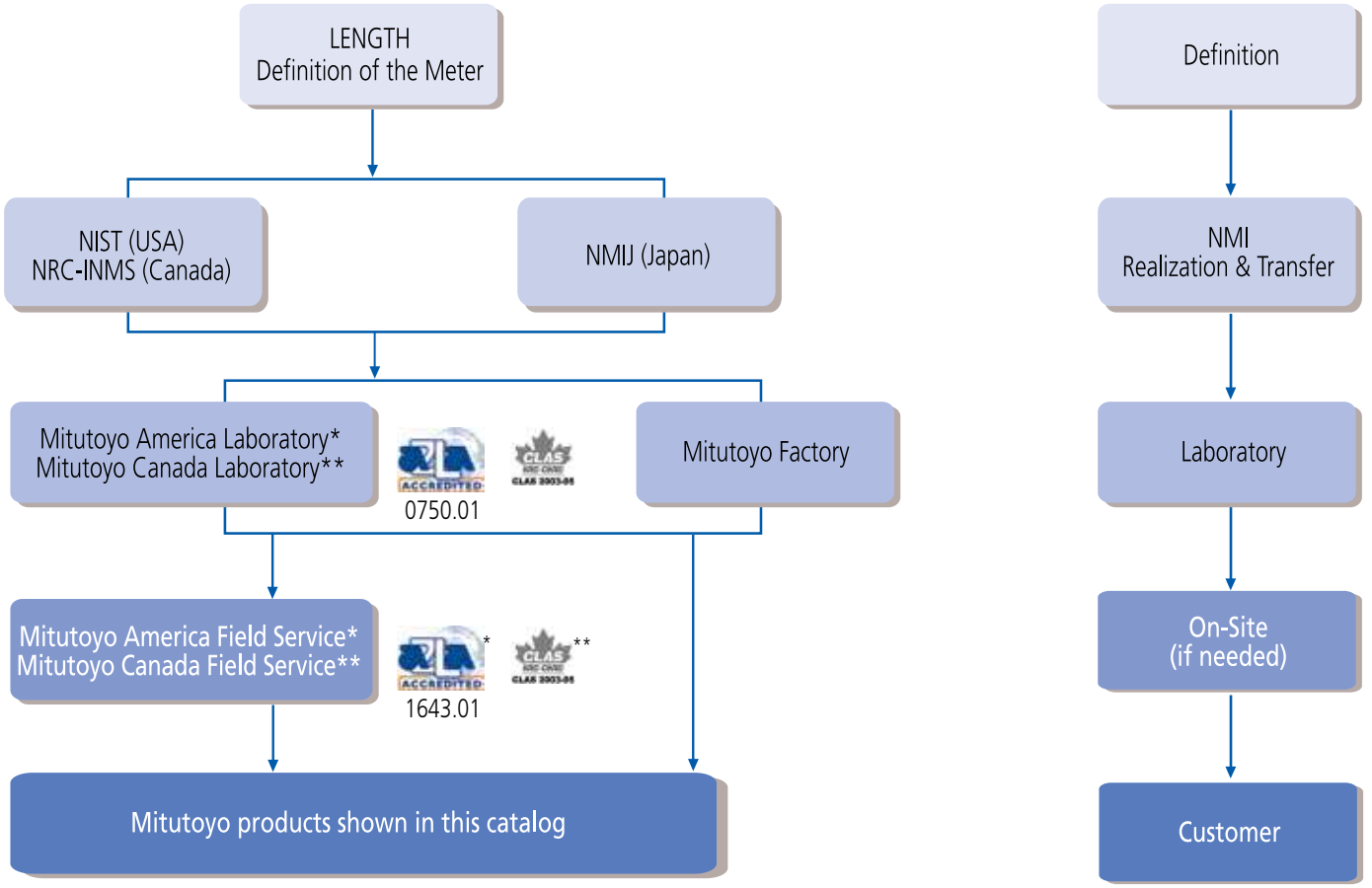

Traceability is an essential requirement for all measurements. At Mitutoyo, we consider providing traceability to our customers to be a critical part of our business. Traceability is often referred to as a "chain of comparisons," and that chain always starts with a precise definition. For length measurements, the meter is defined by how far light moves in a vacuum in a defined amount of time. The job of reducing that definition into a practical measurement belongs to the world's National Metrology Institutes (NMI). The NMI in the United States is the National Institute of Standards and Technology (NIST), where they realize and transfer the definition of length to physical measurements of gage blocks, line scales, and other primary standards. From there, traceable measurements at other laboratories and factories are possible. Mitutoyo factories and calibration labs regularly send their standards to NIST; however, traceability can also be established through other recognized NMIs, such as the National Metrology Institute of Japan (NMIJ). The world's leading NMIs, such as NIST and NMIJ, routinely participate in intercomparisons to ensure global traceability to the same unit of length.

The requirements for demonstrating traceability vary from industry to industry. In the past, some industries required NIST test numbers, but that practice is now obsolete and has been replaced in many industries by the much more demanding requirement of ISO 17025 accreditation. To meet these needs, Mitutoyo America offers our customers A2LA-accredited calibrations either in our labs (Certificate 0750.01), or at your facility (Certificate 1643.01). None of our competitors can match the range and accuracy of accredited calibration services offered by Mitutoyo. Not every quality system requires accreditation, and for the less demanding needs, our standard factory issued certificates can still be used to ensure the required traceability.

Whatever the measurement, whatever the requirements for traceability, Mitutoyo has the most technically advanced metrology products and calibration services to meet your specific needs.

Offering Reliable Traceability Worldwide

Calibration laboratories worldwide

Mitutoyo has built a network for comprehensive support of calibration of precision measuring products in the global market. To provide calibration services on a global scale, Mitutoyo has calibration laboratories that have received ISO/IEC 17025 certification, an international standard, from accredited organizations in each of the countries in which Mitutoyo operates in Japan and abroad.

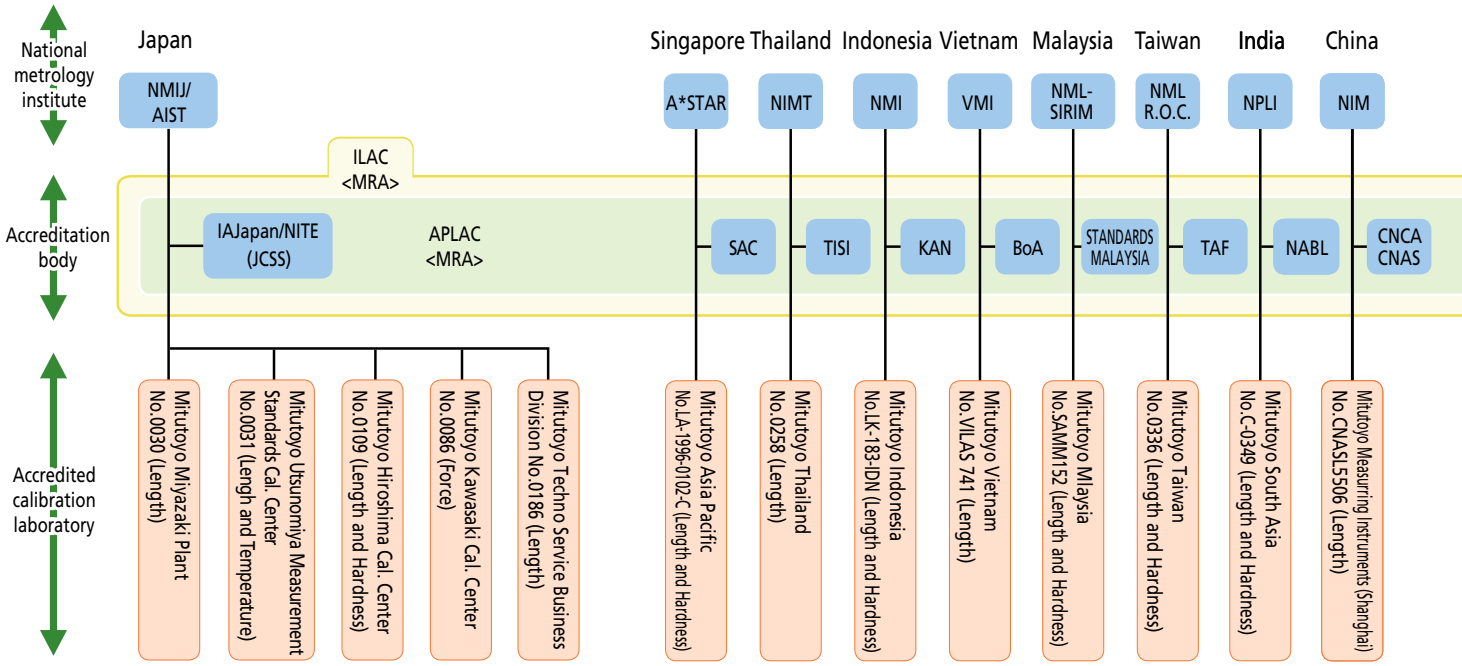

- Japan
  - AIST :National Institute of Advanced Industrial Science and Technology
  - NMIJ :National Metrology Institute of Japan
  - IAJapan :International Accreditation Japan
  - NITE :National Institute of Technology and Evaluation
  - JCSS :Japan Calibration Service System
- Singapore
  - A*STAR :Agency for Science, Technology and Research
  - SAC :Singapore Accreditation Council
- Thailand
  - NIMT :National Institute of Metrology (Thailand)
  - TISI :Thai Industrial Standard Institute
- Indonesia
  - NMI :Puslit Metrologi-LPI
  - KAN :Komite Akreditasi Nasional
- Vietnam
  - VMI :Vietnam Metrology Institute
  - NABL :BUREAU OF ACCREDITATION
- Malaysia
  - NML-SIRIM :National Metrology Laboratory-Standards and Industrial Research Institute of Malaysia
  - STANDARDS MALAYSIA :Department of Standards Malaysia
- Taiwan
  - NML R.O.C. :National Measurement Laboratory R.O.C.
  - TAF :Taiwan Accreditation Foundation
- India
  - NPLI :National Physical Laboratory of India
  - NABL :National Accreditation Board for Testing and Calibration Laboratories
- China
  - NIM :National Institute of Metrology
  - CNCA :Certification and Accreditation Administration of the People's Republic of China
  - CNAS :China National Accreditation Service for Conformity Assesment
- USA
  - NIST :National Institute of Standards and Technology
  - A2LA :American Association for Laboratory Accreditation
- Canada
  - NRC-INMS :National Research Council Canada -Institute for National Measurement Standards
  - CLAS/SCC :Calibration Laboratory Assessment Service / Standards Council of Canada
- Mexico
  - CENAM :Centro Nacional de Metrología
  - EMA :Entidad Mexicana de Acreditación, a.c.
- UK
  - NPL :National Physical Laboratory
  - UKAS :United Kingdom Accreditation Service
- The Netherlands
  - VSL :Van Swinden Laboratorium
  - RvA :Raad voor Accreditatie
- Germany
  - PTB :Physikalisch-Technische Bundesanstalt
  - DAkkS :Deutsche Akkreditierungsstelle GmbH

Note: The above are domestic and international locations where Mitutoyo provides ISO/IEC 17025 accredited calibration services.
(As of 18th December, 2015)

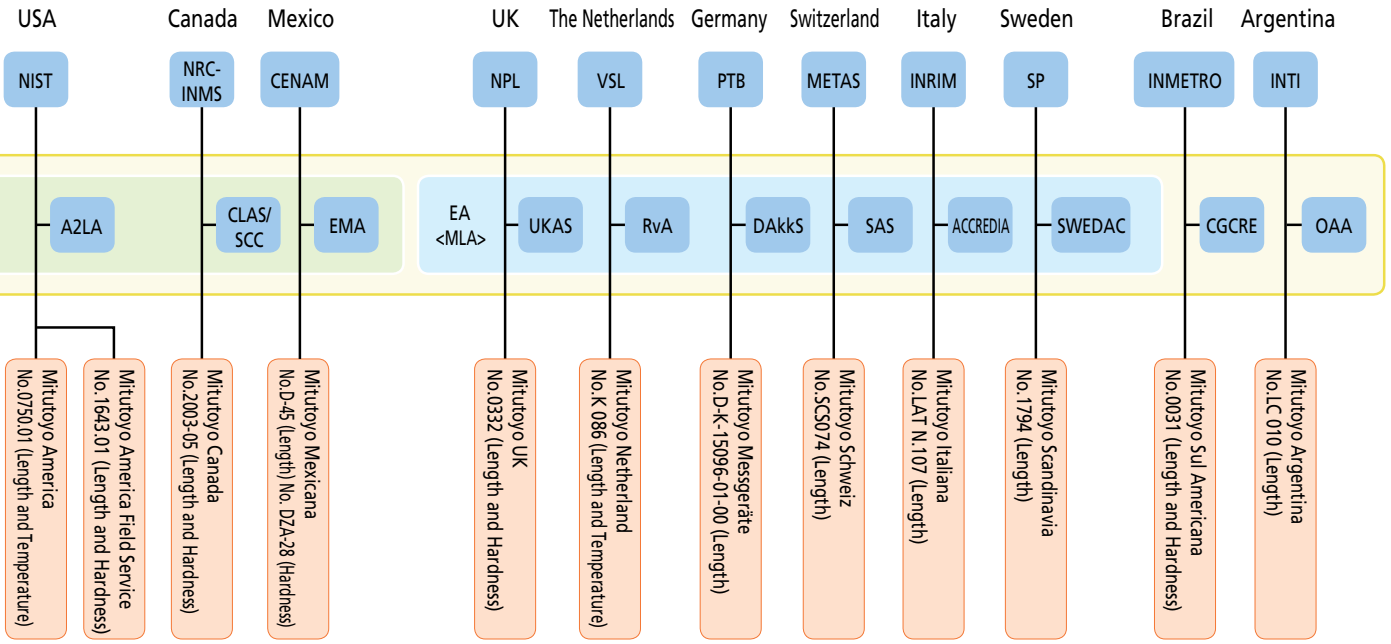

- Switzerland
  METAS :Federal Institute of Metrology
  SAS :Swiss Accreditation Service
- Italy
  INRIM :Istituto Nazionale di Ricerca Metrologica
  ACCREDIA :L'ENTE ITALIANO DI ACCREDITAMENTO
- Sweden
  SP :SP Technical Research Institute of Sweden
  OSWEDAC :Swedish Board for Accreditation and Conformity Assessment
- Brazil
  INMETRO :Instituto Nacional de Metrologia Qualidade e Tecnologia
  CGCRE :Coordenação Geral de Acreditação do INMETRO
- Argentina
  INTI :Instituto Nacional de Tecnologia Industrial
  OAA :Organismo Argentino de Acreditación

ILAC :International Laboratory Accreditation Cooperation
APLAC :Asia-Pacific Laboratory Accreditation Cooperation
MRA :Mutual Recognition Arrangement
EA :European co-operation for Accreditation
MLA :Multilateral Agreement



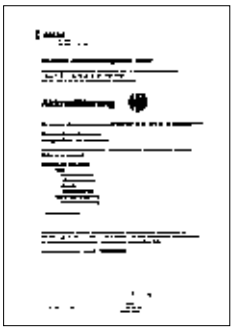







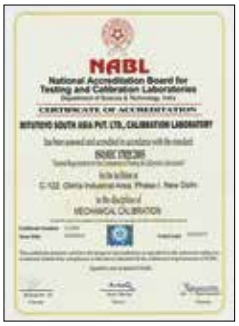

Offering High-level Calibration Services Worldwide

Based on highest measurement capabilities of the same level as national standards

Traceability system

Mitutoyo's traceability system is made possible through an in-house calibration organization certified by the ISO/IEC 17025 international standard, with length standards directly related to national standards (atomic clock synchronized to UTC and the optical frequency comb) at the highest level. National standards are mutually recognized by CIPM, and the certified calibration organization is mutually recognized by ILAC, so that the establishment and maintenance of traceability for Mitutoyo products is achieved both in Japan and globally.



Certificate of JCSS accredited laboratory (Mitutoyo Utsunomiya Measurement Standards Calibration Center)

Traceability of Length Field

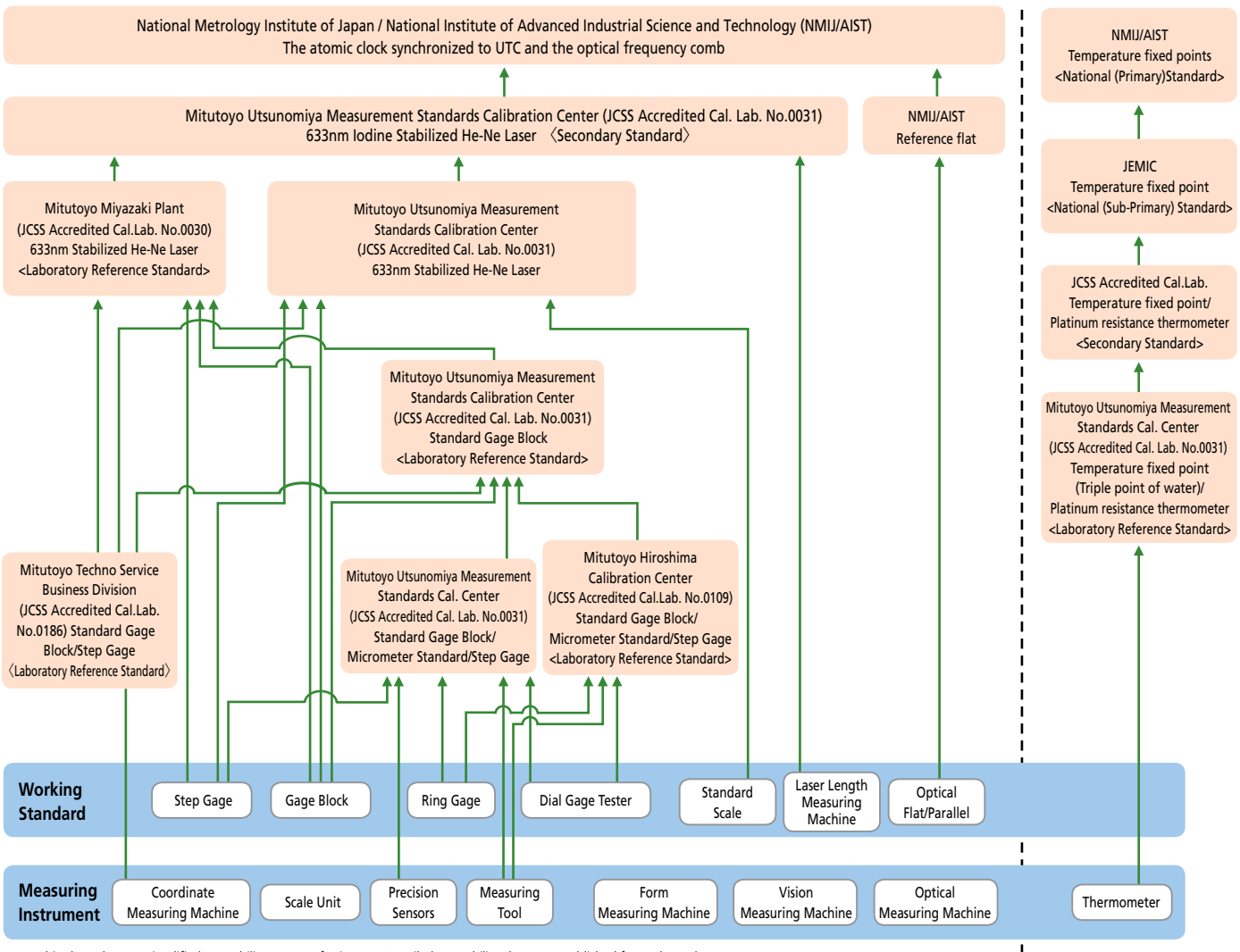

Note: This chart shows a simplified traceability system of Mitutoyo. Detailed traceability charts are published for each product.

Traceability of Test Equipment

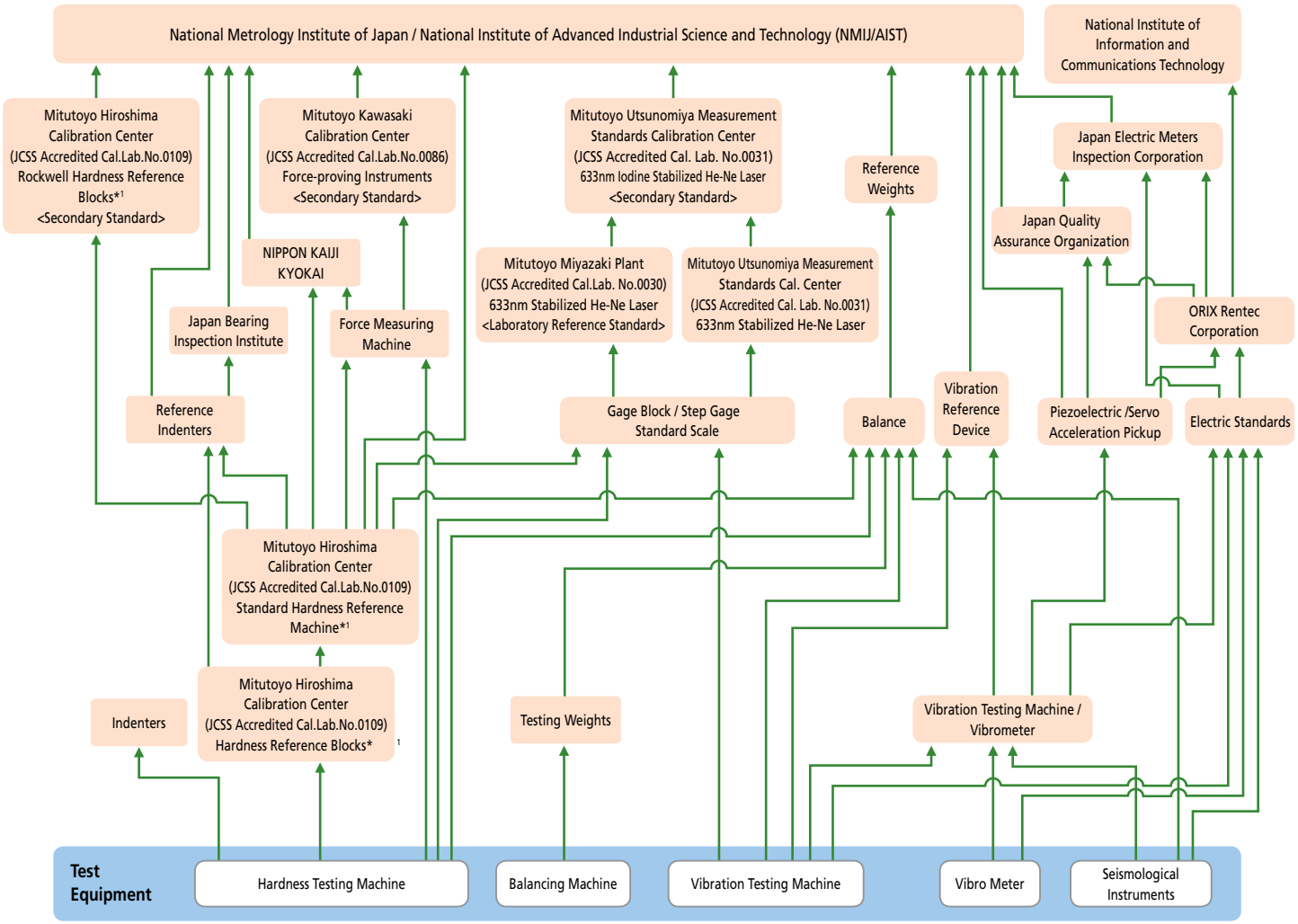

*1 The scope of JCSS accreditation is from 20HRC up to 65HRC in the Rockwell Hardness Testing Machines and the Hardness Reference Blocks.
Note: This chart shows a simplified traceability system of Mitutoyo. Detailed traceability charts are published for each product.
(As of December, 2015)

Conformance to CE Marking

Conformance to CE Marking

In order to improve safety, each plant has programs to comply with the Machinery Directives, the EMC Directives, and the Low Voltage Directives. Compliance to CE marking is also met. CE stands for "Conformité Européenne." CE marking indicates that a product complies with the essential requirements of the relevant European health, safety and environmental protection legislation.



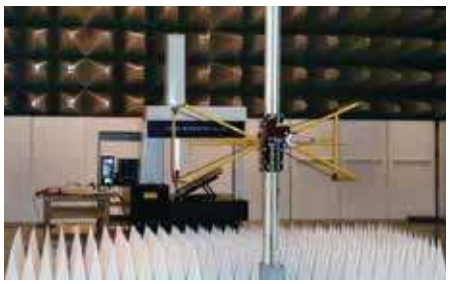

Conformity evaluation for CE marking (EMC Directives)

Major EC Directives relating to Mitutoyo products

Name of EC Directive	Applicable range
Machinery Directive	A part of a machine that may cause injury to human body if it moves due to movement of an actuator such as a motor
EMC Directive (Electromagnetic Compatibility Directive)	Equipment (device) that may produce electro-magnetic interference or whose performance is liable to be affected by electromagnetic interference
Low Voltage Directive	Equipment (device) that uses AC voltage of 50 - 1000V or DC voltage of 75 - 1500V , and may pose a potential danger to the human body, animals or property

Response to RoHS Directive

The RoHS Directive*1 restricts the use of chemical substances in Europe. Certain electronic equipment containing the specified 6 substances (lead, cadmium, mercury, hexavalent chromium, polybrominated biphenyls (PBB) and polybrominated diphenyl ether (PBDE)) over the quantities determined in the Directive have been prohibited for sale in Europe since July 1, 2006.
The RoHS Directive was revised on July 1, 2011. We will continue to contribute to global environment protection and work so all of our products conform to the RoHS Directive.

*1 RoHS Directive: Directive 2011/65/EU of the European Parliament and of the Council on the restriction of the use of certain hazardous substances in electrical and electronic equipment.

Response to WEEE Directive

The WEEE Directive*2 is a directive that mandates appropriate collection and recycling of electrical and electronic equipment waste. The purpose of this directive is to increase the reuse and recycling of these products, and seeks eco-friendly product design.
To differentiate between equipment waste and household waste, a crossed-out wheeled-bin symbol is marked on a product.
We will promote eco-friendly design for our products.

*2 WEEE Directive: Directive 2002/96/EC of the European Parliament and of the Council on waste electrical and electronic equipment.

Response to REACH Regulation

REACH Regulation*3 is a regulation governing registration, evaluation, authorization and restriction of chemical substances in Europe, and all products such as substances, mixtures and molded products (including accessories and packaging materials) are regulated.
Chemical substances scientifically proven to be substances that are hazardous to human health and the global environment (a substance of very high concern (SVHC)) are prohibited to be sold or information concerning them disclosed is mandated in Europe.
We will actively disclose information about our products and provide replacement if we find our products contain any of the listed substances.

*3 REACH Regulation: Regulation (EC) No1907/2006 of the European Parliament and of the Council concerning the Registration, Evaluation, Authorization and Restriction of Chemicals



Measurement Data Management

INDEX

Data Management (SPC)	
MeasurLink	A-2-10
Input Tools	A-11
USB Input Tool Direct: USB-ITN	A-12,13
U-WAVE	A-14,15
Multiplexers – MIG-8USB, MIG-4USB	A-16
Gage Selector 3	A-17
EC Counter	A-17
DP-1VR	A-18
SPC Connecting Cables	A-19

Mitutoyo

MeasurLink®

An Integrated Solution for Quality Data Management

MeasurLink® meets the challenge of centralizing your quality data with the most versatile tool and instrument interface options available. This high-end statistical platform delivers real-time data—when you need it most—with instant message capabilities and comprehensive quality reporting. MeasurLink® provides part inspection visualizations that are second to none, ensuring a clear view of your inspection process and your measurement results.

Whether used as an enterprisewide quality data solution or as a stand-alone quality data station, MeasurLink® provides the complete situational awareness that you need to successfully manage your process improvement and defect prevention efforts.

MeasurLink® is backed by Mitutoyo, the global leader in metrology, combining a full product line of precision measuring tools, instruments and equipment with a worldwide information network that understands the unique precision measurement and quality management needs of every industry that it serves.

Most of Mitutoyo's electronic instruments can output data via optional connecting cables or wireless transmitters and receivers in the form of the Digimatic code. The Digimatic code can also be converted into RS-232C format with several available gage multiplexers. In this way, digital data can be sent to PCs for data acquisition and advanced statistical analysis.

As a client/server application, MeasurLink gives you the performance you need through distributed processing. Combined with a multi-user relational database, MeasurLink® delivers a safe and organized data warehousing system, making quality data available for viewing and analysis by any member of the production, engineering and managerial staff throughout your company. Inspection in the factory produces data for analysis, corrective action and various reporting needs. As the backbone of your quality efforts, MeasurLink® is guaranteed to reduce your production costs and increase your bottom line.

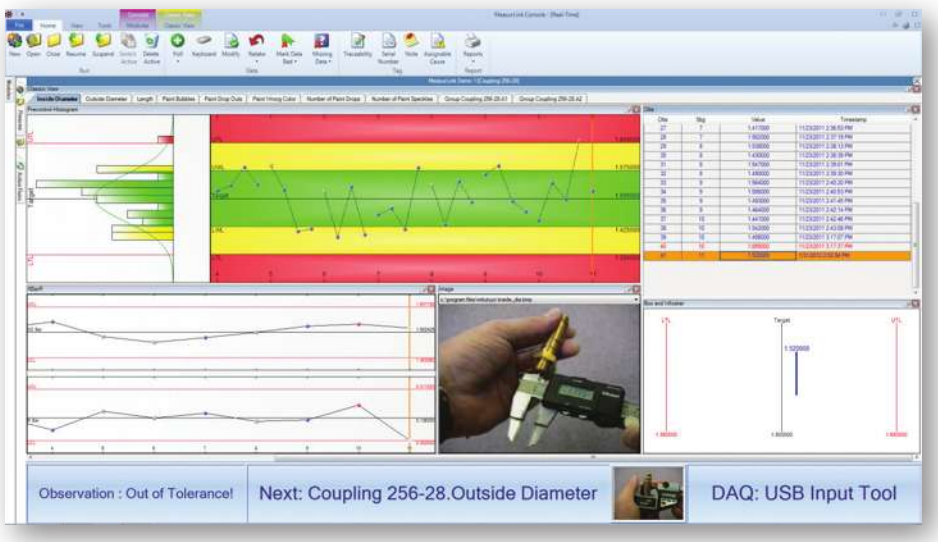

MeasurLink Suite of Software

MeasurLink is an easy-to-use, Windows-based family of quality data management software applications. MeasurLink combines real-time data acquisition, on-line statistical analysis, integrated networking and quality information sharing into a comprehensive data management solution.

- **Real-Time**
  Real-time data collection
- **Process Analyzer**
  Analysis of all data
- **Process Manager**
  Network monitoring dashboard
- **Gage R&R**
  Gage repeatability and reproducibility
- **Gage Management**
  Gage inventory and calibration control



MeasurLink 8 System Requirements

Database Management System (DBMS) Requirements

MeasurLink 8 ships with a copy of Microsoft® SQL Server 2014 SP1, which can be for a standalone or a workgroup installation. MeasurLink 8 also supports:

- Microsoft® SQL Server 2014
- Microsoft® SQL Server 2012
- Microsoft® SQL Server 2008

Operating System Requirements

All MeasurLink 8 products are supported on the following Microsoft® Windows Operating System versions:

- All Windows® 10 versions
- All Windows® 8 versions
- All Windows® 7 versions
- 32-bit and 64-bit supported

www.measurlink.com

Microsoft Partner
Gold Application Development

Windows 10 Compatible
Windows 8 Compatible
Compatible with Windows 7

MeasurLink®

An Integrated Solution for Quality Data Management

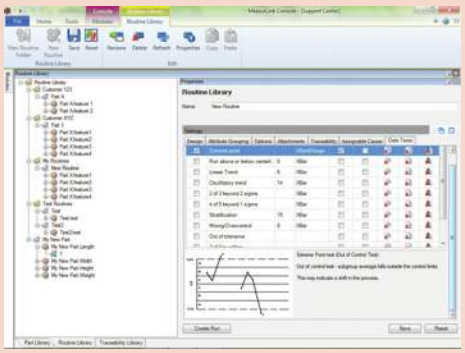

Easy-to-use MeasurLink® provides you the most intuitive interface with complete SPC functionality to help monitor and manage your manufacturing processes. With MeasurLink®, you can easily manage the quality levels of your parts, identify problem areas and apply corrective action to areas in need of attention.

www.measurlink.com

Microsoft Partner
Gold Application Development

Windows 10 Compatible | Windows 8 Compatible | Compatible with Windows 7

User-friendly

Click a gage button and watch the charts update in real-time. This helps the operator stay on top of the process. Begin collecting data in minutes with Inspection Wizard.

Data acquisition

Collects data from digital micrometers, calipers, indicators, bore gages, etc. Keyboard entry is a snap. Collect data for one or a million parts.

Comprehensive SPC

Easy-to-use control charts, histograms, capability, detailed statistics, assignable causes, corrective actions and traceability make this software best in class.

Variable data

Collect dimensional data (length, width, height, outside diameter, inside diameter weight, etc.). Supports derived features (calculations for run out, volume, true position, etc.) .

Attribute data

Collect data from visual inspections (burrs, cracks, dents, missing holes, etc.) to determine the fitness of a part. Track failures using a go/no-go style or count the defects on a characteristic to determine if a part is defective. There is complete flexibility to study the individual characteristics and as a group.

Engineering specifications

Attach drawings to parts, routines or individual characteristics for viewing. Most file formats are supported as an attachment (e.g. Word, PDF, CAD).

Multimedia aids

Attach movies (AVI, MOV, MPG), sound (WAV) and images (BMP, JPG, TIF) to parts, routines or individual characteristics as instructional aides for an operator.

Revision history

Track specification adjustments and preserve historical data.

Mathematically derived characteristics

Full functioning real-time calculator with standard math functions including square root, exponential, trigonometric, sum, average, max, min, calculations.

Variable collection frequency

Allows characteristics of the same routine to be measured at different intervals while maintaining appropriate prompted guided sequencing.

Part pictures

View scanned blueprints and digital photographs at a glance. On-screen guided sequencing keeps the operator moving to the right feature.

Data tests

Full support of Western Electric and Nelson Tests for pattern recognition in control charts (e.g. extreme point, trend, stratification, oscillation, etc.) along with various alerts for each failed test.

Forced assignable cause

Force assignable cause tags on inspector during collection if process is out of control. Empower operator to build on existing pick list.

Corrective action plans

Operators choose corrective action as applied to the part or process. Multiple corrective actions can be applied to any subgroup. Empower operator to build on existing corrective action list.

Sequenced and random gage input

Flexible data input. Collect data by feature, by part or randomly. Guided sequencing minimizes inspection errors.

Time-stamped data

All observation data is marked with the data and time from the computer clock.

Flexible reporting

Build report templates with company logos and free form text. Select and position chart types to customer specification.

Mixed variable/attribute data

Mix your dimensions and non-conformances in the same inspection routine. Track defects and defectives along with your dimensional data.

Crystal Reports

Create your own customized Crystal Reports for use with part or run data.

FDA 21CFR Part11 support

Provides support for medical and pharmaceutical manufacturers electronic records, including audit trails, e-signatures (Process Analyzer Professional only) and advanced security.

Inspection wizard

Begin collecting data in 60 seconds with a "Quick Run" by defining features, tolerances and input method.

MeasurLink® Real-Time

On-line Real-Time Data Collection

FEATURES

MeasurLink Real-Time performs as a data acquisition clearinghouse by enabling you to connect and acquire data from virtually any measuring device. It supports the full range of metrology technology, including calipers, micrometers, indicators, CMMs, vision systems and more. Select the edition to fit the device and the needs.

Real-Time Standard Edition

Designed for customers who want to acquire and analyze data in real-time and check variable and attribute inspection to maximize production and minimize defects. It has views to allow the user to create parts, characteristics with nominal and tolerance, and traceability lists. The data collection interface provides real-time graphics for Run charts, Control charts, Histograms and Statistics. Standard views include Datasheet (observations and charts), Classic View (chart windows), and 2D view (part images with callouts that include charts and statistical data) along with a customizable Info View and additional Manager views. Full reporting template functionality is provided.

Supported data sources: *keyboard, RS232 and USB devices.*

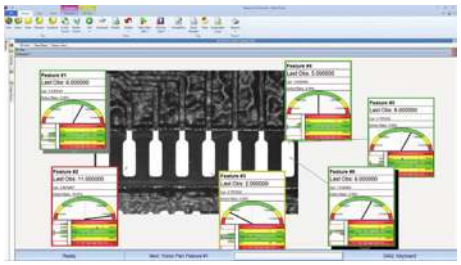

SPECIFICATIONS

Order No.	Description
64AAB470	MeasurLink 8 Real-Time Standard Edition

Real-Time Professional Edition

Enables customers to connect and acquire data from Mitutoyo coordinate measuring machines, vision and form measuring systems via native integration (DDE). ASCII and QMD (xml-based) file import are also supported. In addition to all of the features supported by **MeasurLink 8 Real-Time Standard Edition,** this application also supports data filters. Full reporting functionality with templates is also provided.

Supported data sources: *keyboard, RS232 and USB devices, native Mitutoyo integration (DDE), ASCII and QMD (xml-based) file import.*

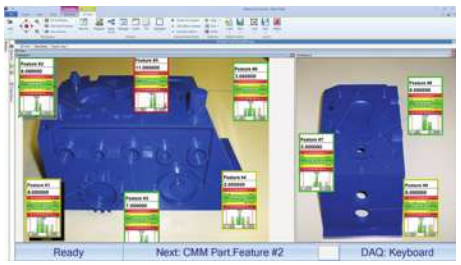

Import templates

Easily create an import template that maps data in a text file to MeasurLink information. Templates are saved to the database for everyone to use and can be added as data sources to data collection stations. An import template can be verified against the source file without adding data to the system.

SPECIFICATIONS

Order No.	Description
64AAB471	MeasurLink 8 Real-Time Professional Edition

Direct data transfer

Collect data into MeasurLink from MeasurLink enabled Mitutoyo capital equipment. This provides a tighter and more robust interface than importing data from files.

Filter data

All data collected within a Real-Time run is related. Often, especially for runs containing a large volume of subgroups, requests are made for subsets of data that are further related from the entire run's population. MeasurLink provides robust filtering capabilities to comply with these requests.

Import data

When set up as a data source, import templates are readily available to the operator, or periodic imports can be executed.

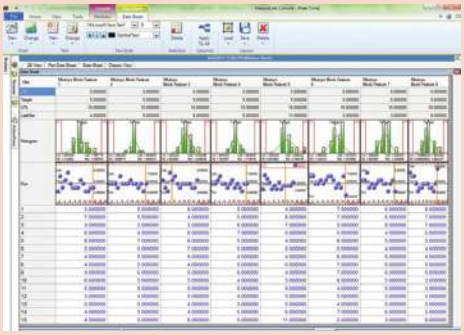

MeasurLink is designed to detect and display patterns and provide additional statistical information. Many patterns can be seen appearing on SPC charts, including:

- Cycles
- Trends
- Freaks
- Mixtures
- Grouping or "bunching" of measurements
- Gradual change in level
- Sudden shift in level
- Instability (abnormally large fluctuations)
- Stratification (abnormally small fluctuations)
- Interactions (two or more variables acting together)
- Systematic variation
- Tendency of one chart to follow another
- Attribute data tests

www.measurlink.com

MeasurLink®
An Integrated Solution for Quality Data Management

Real-Time Professional 3D Edition

Designed for customers who wish to collect data using the Hoops 3D graphics view, in addition to all features offered by MeasurLink 8 Real-Time Professional Edition. Hoops 3D files can be exported from most CAD systems and provides the operator with a real view of the part. Camera angle and position can be saved for each characteristic providing for an intuitive prompted guided sequencing for the inspector.

Supported data sources: *keyboard, RS232, and USB devices, native Mitutoyo integration (DDE), ASCII and QMD (xml-based) file import.*



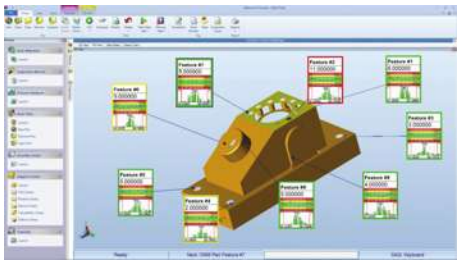

3D view

True three-dimensional model support with Hoops streaming files (*.HSF). Export your part's model from Catia, Solidworks or other CAD software and place callouts in the 3D space.

Flexible callout design

Callouts provide part acceptability at a glance. You can design them the same way as for the two-dimensional view to include charts or statistical information with the ability to size any element inside the callout.

Guided sequence

The display can automatically change during data collection to show the next or last observation point, providing a simple guided sequence for the inspection procedure. By saving a different view for each characteristic to be inspected, you can have the model rotate, pan or zoom to show the operator details of the part.

SPECIFICATIONS

Order No.	Description
64AAB472	MeasurLink 8 Real-Time Professional 3D Edition

Edition Definitions

Function	Real-Time Standard Edition	Real-Time Professional Edition	Real-Time Professional 3D Edition	Process Analyzer Lite Edition	Process Analyzer Professional Edition
Classic SPC views	x	x	x	x	x
Datasheet	x	x	x	x	x
2D View	x	x	x	x	x
Manager Views	x	x	x		
Hoops 3D View			x		
Filter		x	x		x
CMM/Vision/Form connectivity		x	x		
Import (ASCII)		x	x		
Audit Trails	x	x	x	x	x
Merge, Copy and Edit Data					x
Scatter Chart					x
Archive Data					x
Electronic Signatures					x
Summary Analysis					x
Test for Normality					x

www.measurlink.com

Microsoft Partner
Gold Application Development

Windows 10 Compatible | Windows 8 Compatible | Compatible with Windows 7

Mitutoyo

MeasurLink® Process Analyzer

Data Analysis Software for Windows

MeasurLink®
An Integrated Solution for Quality Data Management

FEATURES

Process Analyzer is an invaluable tool for your quality team. It gives you the flexibility to analyze your processes, identify problem areas and take corrective action to improve your product's quality. Inspection runs can be sorted by inspection station, routine or part, and are displayed with the look and feel of the Windows Explorer. Inspection data can be merged, filtered, grouped, charted and printed to the user's preferences.

Process Analyzer Lite Edition

Designed for offline viewing of real-time data in a networked environment. All views that are available in Real-Time Standard Edition are supported, with the exception of the Manager Views. Full reporting template functionality is also provided.



Review inspection data

Analyze inspection data, view notes and traceability. Open data from different runs to compare the data and process behavior.

Switch between databases

For larger installations that use different databases, the ability to switch the connection allows an engineer to analyze data from all sources.

Tree control navigation

Self-organized inspection data provided in an easy to use navigation tree. Sort data by station or inspection routine, part, year, month or day.

Reporting

Reporting is made easy through the use of a "what you see is what you get" style of template creation that allows you to pick chart and data through drag and drop with resizing. Several standard report templates are provided out of the box.

SPECIFICATIONS

Order No.	Description
64AAB474	MeasurLink 8 Process Analyzer Lite Edition

Process Analyzer Professional Edition

Designed for more robust manipulation of real-time data in a networked environment using advanced features not available in MeasurLink Process Analyzer Lite Edition. It enables quality engineering to slice and dice data in meaningful ways that contribute to quality control initiatives.

For larger installations that use different databases, the ability to switch the connection allows an engineer to analyze data from all sources.

Group, Search and Sort data

View data by part, routine, station, year, month, day. Apply saved filters to data and search for specific traceability or serial number criteria.

Merge Data

Combine lot based or just in time collected data to get a bigger picture of process variation and production quality.

Scatter Plots

Perform correlation studies to identify process interactions.

Summary Analysis

Use wizard to view and print a grid with capability and statistical information.

Electronic Signatures

The e-signatures can be applied to runs only in Process Analyzer Professional. When combined with audit trails available in Real-Time, and security is implemented, then MeasurLink provides support for FDA requirements for the medical and pharmaceutical manufacturers.

Filter Data

Robust filtering capabilities are provided. Often, for runs containing a large volume of data, requests are made for subsets of data.

Compare Capability to Traceability

Easily view charts showing the capability of a characteristic based on the traceability, subgroup or time. Compare the capability of machines, for example. The Cpk shows green for exceeding requirements and red for failing.

Process Analyzer Professional is known as the quality manager's favorite tool. Analyze and report on data collected across all machines. For example, merge three months of data together and easily compare operators, suppliers or machines.



SPECIFICATIONS

Order No.	Description
64AAB475	MeasurLink 8 Process Analyzer Professional Edition

MeasurLink® Process Manager

Network Monitoring Software for Windows

FEATURES

Real-time monitoring of data as it is collected. Provides the QC/production manager with the perfect tool to organize and maintain a shop-wide quality program at a glance.

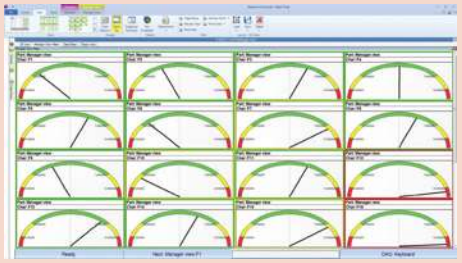

MeasurLink Process Manager displays snapshot windows of characteristics that are currently being collected in MeasurLink Real-Time. The data can be sorted by station, process, capability or timestamp.

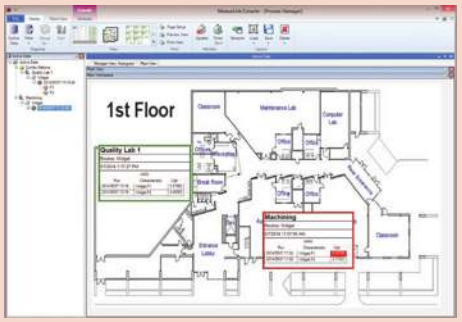

Plant View allows users the highest level view of their shop floor processes. Callouts have a meaningful border color related to tests for capability that have been enabled in each routine's properties.

Process Manager Standard Edition

Process Manager provides a method to audit the entire shop floor inspection activity from a single PC. Easily see process information without walking from one inspection area to another by viewing current production across all machines. Show clients your quality operation for the entire facility.

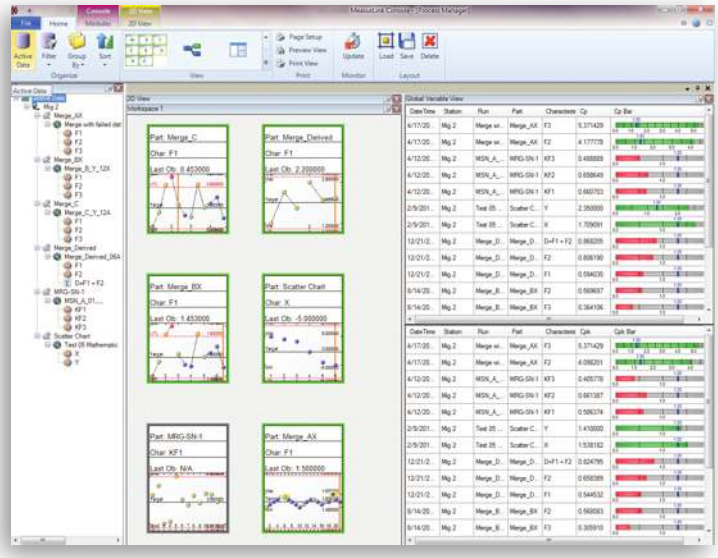

Log View

Designed to display information from multiple stations in a tabular view format. The user can select the type of events to be monitored.

Group, Search and Sort Data

View data by part, routine, or station. Apply saved filters to data so you monitor only the data that you are responsible for.

Manager View

Display a snapshot window of characteristics that are currently being collected in MeasurLink Real-Time. The data can be sorted by station, capability or timestamp.

Global Variable View

Display process capability across all operations in your plant.

Remote viewing

See what the operators see and what your customers will see before product is delivered. Drill down through data to see detailed information. View traceability, assignable causes, corrective action, notes and raw data for current production across all machines.

Ticker View

Display capability values that continuously scroll on the screen.

SPECIFICATIONS

Order No.	Description
64AAB476	MeasurLink 8 Process Manager Standard Edition

www.measurlink.com

Microsoft Partner
Gold Application Development

Windows 10 Compatible
Windows 8 Compatible
Compatible with Windows 7

Mitutoyo

MeasurLink® Gage R&R

Measurement Systems Analysis

MeasurLink®
An Integrated Solution for Quality Data Management

FEATURES

Determines the repeatability and reproducibility, linearity, bias and stability of inspection systems, allowing you to isolate gaging problems.

Gage R&R

Measure the capability of a measurement system for a measurement task. These techniques provide information about a measurement system's reproducibility, repeatability, location or stability. Graphical tools allow for isolation of gaging problems including inconsistencies in technique between operators or inspectors.

Study Wizard
User-guided study setup helps the user define the study that needs to be performed in order to determine the measurement system's capabilities. All elements required for the selected study are captured before the study is created, and the user is warned to provide any missing information before beginning the study.

Data Input
The data for the study can be collected directly from a gage connected to the system or transferred from Mitutoyo coordinate measuring machines, vision and form measuring systems via native integration (DDE). Users can also key in data.

Group Studies
All studies in the database are visible and can be organized using different criteria.

Randomized Collection Sequence
As recommended by the academic community, the collection sequence can be automatically randomized.

Study Types
MeasurLink Gage R&R uses calculation methods based on AIAG's Measurement Systems Analysis, Fourth Edition (commonly known as MSA 4). The following study types are supported:

Location
- Bias
- Linearity

Reproducibility
- Type I
- Variable Range Method

Repeatability & Reproducibility
- Crossed ANOVA
- Crossed Average & Range
- Nested ANOVA
- Nested Average & Range

Stability
- Stability

Attribute Studies
- Attribute MSA 4
- Attribute Short Method



In addition to the standard calculations this software also provides graphical tools for analysis of the measurement system. The Xbar and R chart can show whether there is adequate gage discrimination to record part-to-part variation in production and operator consistency. The Part-by-Appraiser plot can show a lack of consistency between operator inspection techniques.

SPECIFICATIONS

Order No.	Description
64AAB477	MeasurLink 8 Gage R&R

MeasurLink® Gage Management

Gage Inventory and Calibration Control

FEATURES

Gage Management is essential for monitoring the calibration history of a gage. Periodic adjustments may be required to bring a gage into specification.

Gage Management Standard Edition

Gage Inventory Management
Easily enter and view details on all gages in a grid that can be grouped, filtered and sorted.

Email List of Gages Due or Overdue
Once the gage calibrations are scheduled, the list of gages due or overdue for calibration can be viewed as a report, and those lists are available for scheduled email notifications. Also available for gages due for Gage R&R studies (requires purchase of Gage R&R).

Gage Calibration
Perform and track calibrations using customizable gage calibration procedures. Also track outside calibration results. A "smart" calendar allows definition of working days.

Gage Tracking and History
Track gage movement as gages are transferred to various activities, locations and users. Supports vendor contact and user lists.

Print Gage Labels
Interface with a Brother's P-touch printer for printing labels for gages.



- Gage inventory management
- Gage calibration recall system
- Gage calibration procedure
- Assessment and reporting
- Gage vendor management
- Gage location management
- Gage R&R history

SPECIFICATIONS

Order No.	Description
64AAB478	MeasurLink 8 Gage Management

MeasurLink® Workgroup and Site License Packages

Packages and Bundles

The MeasurLink suite is best acquired as a Workgroup or Site License. These packages are a mix and match bundle of any module. Workgroups are 5, 10 and 15 seats. A site license is 30 or more seats of MeasurLink. The package can be any combination of Real-Time*, Process Analyzer, Process Manager, Gage R&R and/or Gage Management modules. All of the stations in the installation store their data in an SQL database located on the user's network.

**Real-Time Professional 3D Edition has an additional surcharge per seat.*

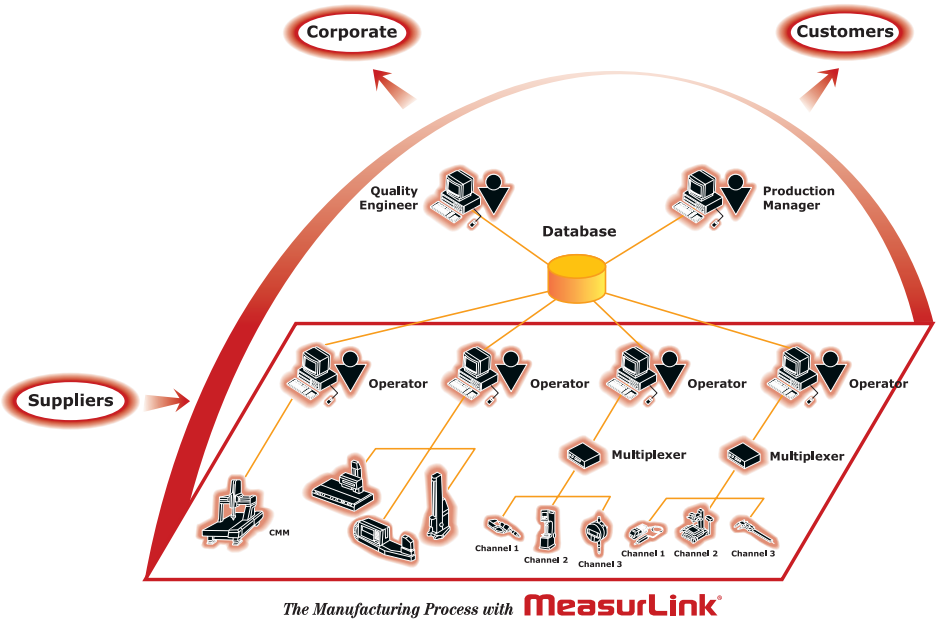

MeasurLink Group Licensing

SPECIFICATIONS

Order No.	Description
64AAB479	MeasurLink 8 Site License

MeasurLink 8 Site License is a bundle package that provides the customer with the ability to install up to and including 30 copies (any combination) of any application in the MeasurLink 8 suite.

Order No.	Description
64AAB480	MeasurLink 8 Workgroup License

MeasurLink 8 Workgroup License is a bundle package that provides the customer with the ability to install up to and including 15 copies (any combination) of any application in the MeasurLink 8 suite.

Order No.	Description
64AAB482	MeasurLink 8 Workgroup License – 10 Pack

MeasurLink 8 Workgroup License – 10 Pack is a bundle package that provides the customer with the ability to install up to and including 10 copies (any combination) of any application in the MeasurLink 8 suite.

Order No.	Description
64AAB483	MeasurLink 8 Workgroup License – 5 Pack

MeasurLink 8 Workgroup License – 5 Pack is a bundle package that provides the customer with the ability to install up to and including 5 copies (any combination) of any application in the MeasurLink 8 suite.

Order No.	Description
64AAB484	MeasurLink 8 Academic License

MeasurLink 8 Academic License a bundle package that provides universities and technical colleges with the ability to install up to and including 20 copies (any combination) of any application in the MeasurLink 8 suite for educational purposes.

Note: Upgrade packages are also available.
Please contact our sales department for details.



www.measurlink.com

Benefits include:

- Better unit cost.
- Mix and match desired modules.
- Site licenses can be shared among multiple facilities.
- Security center can manage users access with each module.
- Support Center allows users to manage the suite through the network, eliminating interruption in data collection.

MeasurLink® Floating License

Floating License Upgrade Option

Users who want to use MeasurLink in a terminal server environment or want to have a number of concurrent users should consider the Floating License add-on. This upgrade is available in packs of 5, 10, 15 and 30. This upgrade includes a licensing sever that manages the number of seats available.



This type of installation is common in modern IT infrastructure. Thin-Client hardware or traditional PCs can utilize this option. A user could choose to upgrade a portion of or their entire number of seats to the Floating License upgrade option.

Benefits include:

- Easier maintenance of installations.
- Most flexible use of modules.
- Cost-effective way to include more users without purchasing additional seats.
- Can be added to an existing installation or integrated during the initial installation.

Microsoft Partner
Gold Application Development

Windows 10 Compatible
Windows 8 Compatible
Compatible with Windows 7

MeasurLink Floating Option

SPECIFICATIONS

Order No.	Description
64AAB479F	MeasurLink 8 Floating License Option 30

MeasurLink 8 Floating License Option 30 adds the Floating Option to a new or an existing installation. Must already have a minimum of 30 seats to add this option.

Order No.	Description
64AAB480F	MeasurLink 8 Floating License Option 15

MeasurLink 8 Floating License Option 15 adds the Floating Option to a new or an existing installation. Must already have a minimum of 15 seats to add this option.

Order No.	Description
64AAB482F	MeasurLink 8 Floating License Option 10

MeasurLink 8 Floating License Option 10 adds the Floating Option to a new or an existing installation. Must already have a minimum of 10 seats to add this option.

Order No.	Description
64AAB483F	MeasurLink 8 Floating License Option 5

MeasurLink 8 Floating License Option 5 adds the Floating Option to a new or an existing installation. Must already have a minimum of 5 seats to add this option.

Note: Upgrade packages are also available.
Please contact our sales department for details.

MeasurLink® ENABLED
Data Management Software by Mitutoyo

Input Tools

SERIES 264 — Digimatic Gage/PC Data Input Device

FEATURES

- The input tool allows you to connect any Mitutoyo gage, with SPC output, directly to your PC.
- An USB keyboard signal conversion input tool, IT-016U converts measurement data to keyboard signals and directly inputs them to cells in off-the-shelf spreadsheet software such as Excel.
- An RS-232C communication input tool, IT-007R is also available to input data through RS-232C communication.
- More accurate measurement is possible using an optional foot switch.





Optional Accessories

937179T: Foot switch
939039: Gage selector

SPC connecting cables refer to page A-19.



SPECIFICATIONS

Product **Code No.**	Input Tool for RS-232C **264-007**	Input Tool for USB **264-016**
Measuring Tools Required*1	Mitutoyo Digimatic measuring tools with SPC output	
PC Requirement	PC Compatible, (including laptops) with RS-232C Interface Connects to RS-232C port on CPU (D-sub 9-pin connector)	PC Compatible, (including laptops) with USB 2.0 or 1.1 port
Outside Dimensions HxWxD	2.8″ x 1.7″ x .9″ (72 x 44 x 23.5 mm)	2.5″ x 1.5″ x .83″ (64 x 38 x 21 mm)
Mass	3.2oz. (91g)(including cable and connector)	2.0oz (56g)

*1: Connecting cable (optional accessory) is required for a connection to a digimatic measuring tool.
*2: Cannot be used for computers that use USB keyboard. When using a IBM Think Pad Series, a commercial keyboard adapter is required. When using AT style keyboard, adapter for conversion is required.

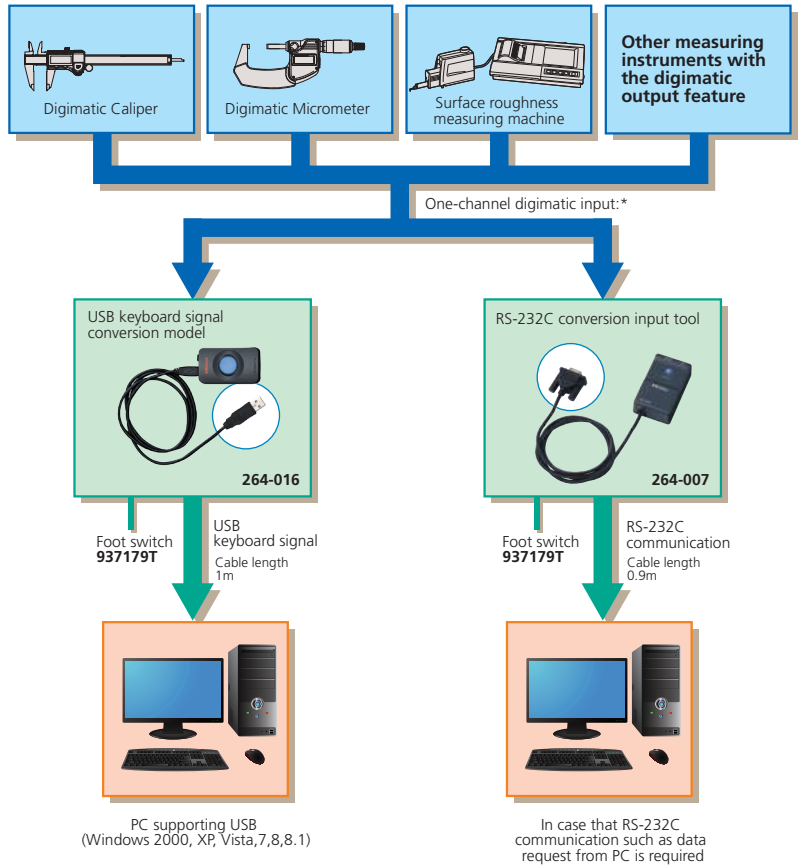

* When you use an optional gage selector 3, you can connect up to three measuring gages and select an input by switching them. When using **264-016**, you can connect multiple input tools at the same time with an off-the-shelf USB hub. Simultaneous input, however, is not supported.
For cables used to connect each measuring gage and input tool, refer to page A-15.

Mitutoyo

USB Input Tool Direct: USB-ITN

Our USB Input Tool Direct has been streamlined into a range of dedicated models for each type of measuring instrument.

MeasurLink® ENABLED
Data Management Software by Mitutoyo

Data collection can start immediately after connecting the measuring instrument to a computer.

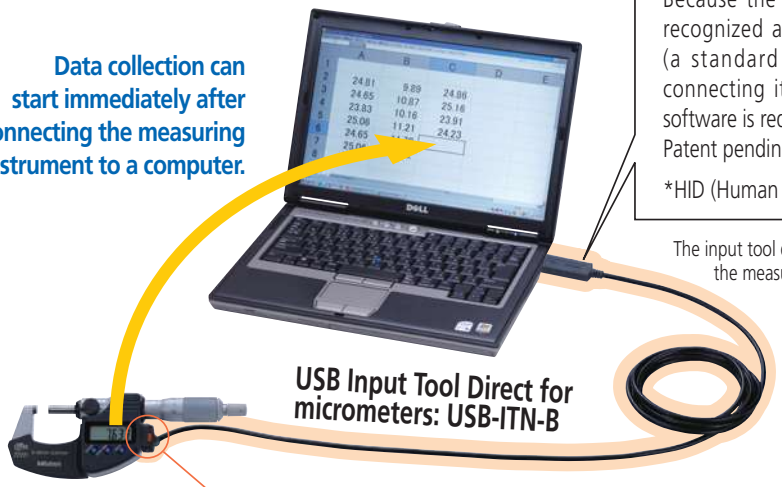

Because the input tool is automatically recognized as an *HID keyboard device (a standard Windows driver) just by connecting it to a USB port, no special software is required.
Patent pending (Japan)

*HID (Human Interface Device)

The input tool directly connects the measuring instrument to a USB port on a computer.

The values displayed on the measuring instrument can be sent to the computer just by pressing the data switch.

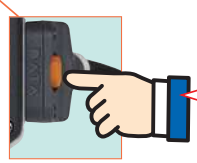

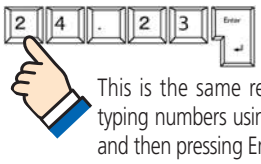

This is the same result as that of typing numbers using the keyboard and then pressing Enter.

Note on using a foot switch with USB-ITN

The USB-ITPAK and USB-FSW options are required (see below).
If not using optional software the IT-016U input tool can be used with a foot switch.

Although measurement data can be simply loaded directly into an Excel spreadsheet by connecting the instrument and input tool to a computer, using the optional USB-ITPAK software enables time-saving operations and procedures that significantly improve reliability and efficiency.

Measurement data collection software: USB-ITPAK® 2.0 Order No. 06AEN846

This setup and data collection software is used to input data from one or more measuring instruments (connected by way of **USB-ITN**) to any Excel sheet. Supports U-Wave. (This software package cannot be used with **IT-016U**.)

USB-ITPAK 2.0



USB dongle



Software use requires USB dongle.

Major features

- Excel input settings: The input destination (a workbook, sheet, or cell), cell-fill direction (right or down), cell-fill interval, and other settings can be specified.
- Measurement method selection: Any of the following three methods can be selected: Sequential measurement, batch measurement, or individual measurement.
- Data input control: Data can be requested, canceled, or skipped by using mouse buttons, function keys, or foot switch.
- Character string input by the USB foot switch adapter, USB-FSW: Any previously specified character string can be input using the foot switch. Examples: *pass* or *fail*
- Number of units that can be connected (total number for both USB-ITN and USB-FSW): Up to 20 units for Windows Vista, Windows 7 and Windows 8/8.1, and up to 100 units for Windows 2000 or Windows XP.
  However, the above numbers might be less depending on the system configuration.
- Data importation time: About 0.2 to 0.3 seconds per unit. However, this value differs depending on the connected measuring instruments and measurement environment.
- Driver software: The VCP (virtual COM port) drivers for USB-ITN and USB-FSW are individually recognized using a built-in COM number. • Patent pending (Japan)

Optional:
USB-FSW
06ADV384

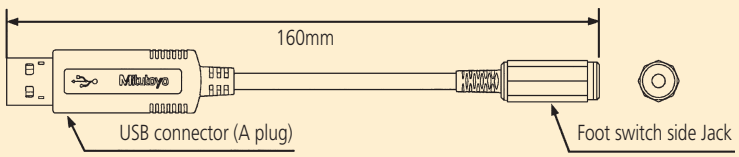

Major specifications of USB Input Tool Direct

- Output specifications: USB 2.0 or 1.1
- Communication speed: 12 Mbps (full speed)
- Power supply: USB bus power
- Mass: 59 g
- USB 2.0 certification obtained
- Complies with the EU EMC Directive
- Illustration (Example: **USB-ITN-A**)

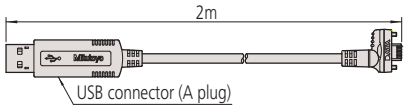

Note: It is recommended to use a commercially available USB hub that has USB certification.

USB-ITPAK usage environment

Supported operating systems*	Windows 2000 SP4, Windows XP SP2 or later, Windows Vista, Windows 7 and Windows 8
Supported Excel versions	Excel 2000, 2002, 2003, and 2007
Hard disk	At least 20 MB of free space (required for installation)
CD-ROM drive	Required for installation
USB ports	At least two ports (for the USB dongle and USB-ITN)
Resolution	At least 800 x 600 pixels, and at least 256 displayable colors

*• 64-bit operating systems are not supported.
• The natural language selected in USB-ITPAK must be the same as that used in the operating system.

Codes for the main measuring instruments classified according to the USB Input Tool Direct code, part number, and plug type

Determine the plug type suitable for your measuring instrument (one of the seven types from **A** to **G**) in the following table, and then select the corresponding USB Input Tool Direct.

Model	USB-ITN-A	USB-ITN-B	USB-ITN-C	USB-ITN-D	USB-ITN-E	USB-ITN-F	USB-ITN-G
Order No.	06ADV380A	06ADV380B	06ADV380C	06ADV380D	06ADV380E	06ADV380F	06ADV380G
Whether the existence of a data switch affects usability	Incorporates a data switch, so the tool is usable regardless of whether or not the measuring instrument has a switch.			Does not incorporate a data switch, so an instrument fitted with a switch is required in order to use the instrument alone. (However, the tool can be used with USB-ITPAK.)			
Cable type	**A** Water-proof with switch	**B** Water-proof with switch	**C** With switch	**D** 10-pin plain	**E** 6-pin round	**F** Straight type	**G** Water-proof straight type
Illustration of the plug that connects to the measuring instrument	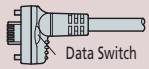	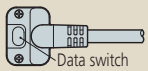	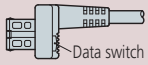	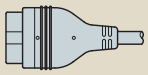		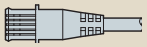	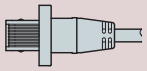
Socket type on the measuring instrument							
Codes of major compatible measuring instruments	[Digimatic Caliper /Super Caliper] **-500 series CD67-S_PM CD-PMX/PM/GM -550/551 series CDC-P_PMX CDN-P_PMX** [Digimatic Carbon Fiber Caliper] **-552 series CFC-G/GL/GC/GU** [Digimatic Depth Gage] **-571 series VDS-PMX** [Digimatic Scale Unit] **-572 series SD-G** [Digimatic Exclusive Caliper] **-573 series NTD-PMX/PM** 	[Digimatic Micrometer, QuantuMike] **-293series MDC-MJ/MJB/MJT MDE-MJ** [Tubular Inside Micrometer] **-337 series IMZ-MJ -339 series IMJ-MJ** [Digimatic Micrometer Head] **-350 series MHN-MB/MJB/MJNB** [Digimatic Exclusive Micrometer] (The end of the mark is– **MJ/MJB/M/MB/PM/PMB**) **[Digimatic Holtest] -468 series HTD-R** 	[Digimatic Micrometer Head] **-164 series MHD-MB** [Digimatic Caliper] **-500 series CD-CX/C/S_C - 550/ 551 CDC-C/CX, CDN-C/CX** [Digimatic Depth Gage] **-571 series VDS-DCX/DC** [Digimatic Scale Unit] **-572 series SD-D/SDV-D** [Digimatic Exclusive Caliper] **-573 series** The end of the mark is **-CX/C** 	Measuring instrument models that incorporate a data switch [Surface Roughness Tester] **-178 series SJ-201/210/301/ 400/500** [Coating Thickness Gage] **-179 series DGE-745/755** [Linear Height] **-518 series QMH-S** [Reference Gage] **-515 series HMD-C** [Digimatic Indicator] **-543 series ID-H** [Laser Scan Micrometer] **-544 series LSM-9506/6100/ 6200/6900** [μ-checker] **Digital μ-checker** (Using the foot switch)	[Digimatic Micrometer] **-121 series BD -164 series MHD-M -227 series CLM -293 series MDQ-M MDC-M** [Tubular Inside Micrometer] **-337 series IMZ-M** [Tubular Inside Micrometer] **-339 series IMJ-M** [Digimatic Holtest] **-468 series HTD** [Reference Gage] **-515 series HME-DM** [Boremastic] **-568 series SBM-C** [Hardness Testing Machines] **-810 series HM-100/200 HV-100/HH-411 HR-500**	[Digimatic Height Gage] **-192/570/574 series HDM-A/AX, HD-A/AX HDS-H_C/C HDF-N** [Digimatic Caliper] **-500/550/551 series CD/CDC/CDN** [Digimatic Bore Gage] **-511 series CG-D** [Digimatic Indicator] **-543 seires ID-C_X/_RB/_GB** [Digimatic Depth Gage/ Digimatic Thickness Gage] **-547 series** Digimatic model (**ID-CX**) [Digimatic Carbon Fiber Caliper] **-552 series CFC-P/-L/-C/-U** [Digimatic Scale Unit] **-572 series SD-E, SDV-E SD-F, SDV-F** [Portable Hardness Testing Instruments] **-811 series HH-300**	[Digimatic Indicator] **-543 series ID-N ID-B** 
				Measuring instrument models that do not have a data switch [Digimatic Indicator] **-543 series ID-F** [Linear Gage/Counter] **-542 series EF-PRH/ZR, EH-P/Z/S/D EB-P/Z/D EC-D** [Litematic] **-318 series VL-A/AS/AH**	No corresponding models	[Digimatic Indicator] **-543 series ID-C/S/C_A** [Digimatic Depth Gage/ Digimatic Thickness Gage] **-547 series** Digimatic model (**ID-C**) **-575 series ID-U**	No corresponding models

U-WAVE

Measurement Data Wireless Communication System

MeasurLink® ENABLED
Data Management Software by Mitutoyo

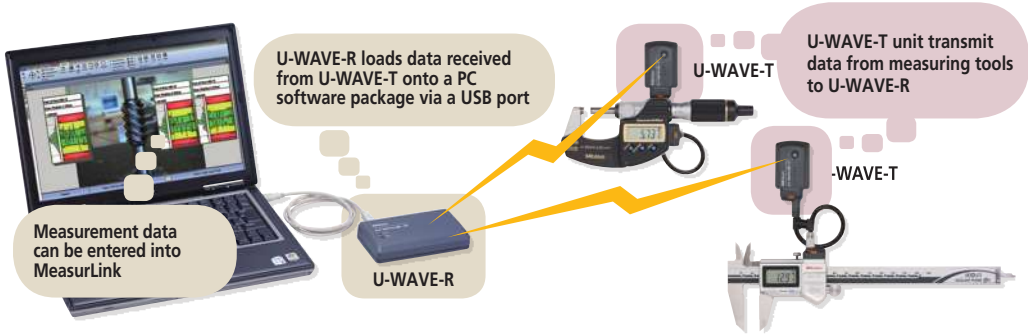

The **U-WAVE** system enables easy wireless data communication from a measuring tool to a PC using the digimatic protocol. Measurement efficiency is improved by eliminating the long and cumbersome data cables. The user-friendly interface allows data to be loaded into any software product that accepts keyboard input, such as Excel* or Notepad.

1 U-WAVE-R · Registered Design (Japan)

Major Specifications of U-WAVE-R

Model	**U-WAVE-R**
Order No.	**02AZD810D***
Power supply	USB bus power system
Number of **U-WAVE-R** units that can be connected to one PC	Up to 16
Number of **U-WAVE-T** units that can be connected	Up to 100
External dimensions	5.51″ x 3.15″ x 1.24″ (140 x 80 x 31.6mm)
Mass	.29 lbs (130g)



*Detailed information on conformity standards of wireless communication specification is given below.

2 U-WAVE-T · Registered Design (Japan)

U-WAVE-T sends measurement data to **U-WAVE-R**.

Actual size



Standard accessory: screwdriver

Major specifications of U-WAVE-T

Model	**U-WAVE-T** (IP67 model)	**U-WAVE-T** (Buzzer)
Order No.	**02AZD730D***	**02AZD880D***
Protection Rating	IP67	–
Data reception indication	LEDs	LEDs and Buzzer
Power supply	Lithium battery CR2032✳1	
Battery life	Approx. 400,000 transmissions	
External dimensions	1.73″ x 1.17″ x .73″ (44 x 29.6 x 18.5 mm)	
Mass	.05 lbs (23g)	

*Detailed information on conformity standards of wireless communication specification is given below.

Installation Bracket Kit

Order No. 02AZE200



(optional)



500 Series Caliper



293 Series Micrometer



543 Series Indicator

Dimensions of Each Part

Unit: mm

U-WAVE-T

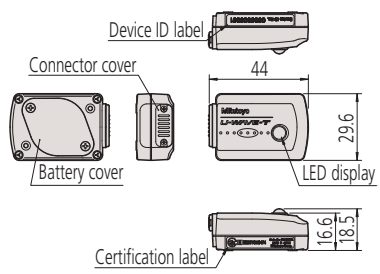

U-WAVE-R

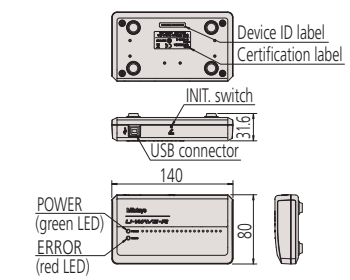

Specifications of wireless communication

Conformity standards	·European conformity standards* EN 50371:2002 EN 300 440-1 V1.3.1 EN 300 440-2 V1.1.2 EN 301 489-01 V1.6.1 EN 301 489-03 V1.4.1 ·U.S.A. conformity standards 47 CFR Part 15.247:(Subpart :C) 47 CFR Part 15,(Subpart :B) ·Canada conformity standards RSS-210 (Issue 7) RSS-Gen (Issue 2) ICES 003 (Issue 4)

Wireless standards	Conform to IEEE802.15.4
Wireless communication distance	Approx. 60ft (within visible range)
Wireless communication speed	250 kbps
Transmission output	1 mW (0 dBm) or less
Modulation method	DS-SS (direct sequence spread spectrum) Resistant to interfering signal or noise.
Communication frequency	2.4 GHz band (ISM band: universal frequency)
Used band	15 channels (2.405 to 2.475GHz at intervals of 5MHz) The noise search function can avoid interference with other communication devices.

Note: In accordance with wireless regulations the use of this product is permitted in Japan, Europe (a total of 32 countries including 27 EU members, 4 EFTA members and Turkey), U.S.A. and Canada. This product must not be used in other countries or areas.
· This product is not compatible with the conventional Mu-WAVE, for which communication specifications are different.
* Japan conformity standards: ARIB STD-T66

U-WAVE

MeasurLink® ENABLED
Data Management Software by Mitutoyo

Measurement Data Wireless Communication System

List of U-WAVE-T Connecting Cables

Select one from cables **A** to **G**, referring to the part number of connecting cable for wired connection in your measuring tool catalog or manual. If you are unsure which cable is appropriate, check the cable connectors, the shapes of terminal on the measuring tool side, or the codes of compatible measuring tool for cables **A** to **G** below.
It is not possible to connect to EF and EH counters.

From seven types of cables (**A** to **G**), select one compatible with your measuring tool.

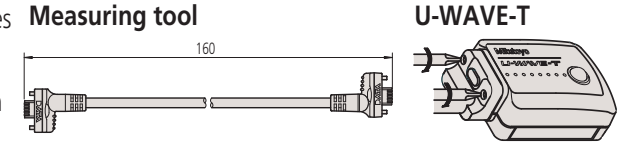

When connected with U-WAVE-T Select one of the USB input tool direct from table below to fit the connector (A to G) and also select either standard type (fig.1) or foot switch type (fig.2) dependent on usage.
Note: Not connectable to these Mitutoyo products: Litematic VL, Linear Gage Counter EF/EH, Surftest SJ-500.


Fig.1 Standard type connecting cable

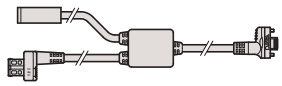
Fig.2 Connecting cable for foot switch

Reference Order No. of connecting cable		A	B	C	D	E	F	G
	1m	05CZA624	05CZA662	959149	936937	937387	905338	21EAA194
	2m	05CZA625	05CZA663	959150	965014	965013	905409	21EAA190

		A	B	C	D	E	F	G
For standard	Order No.	02AZD790A	02AZD790B	02AZD790C	02AZD790D	02AZD790E	02AZD790F	02AZD790G
For foot switch	Order No.	02AZE140A	02AZE140B	02AZE140C	02AZE140D	02AZE140E	02AZE140F	02AZE140G

Cable type	A Water-proof model with output button	B Water-proof model with output button	C With data-out button type	D 10-pin plain type	E 6-pin round	F Plain type straight	G Plain type straight water-proof model
Connector shape on the measuring tool side	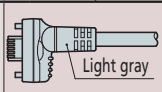 Light gray	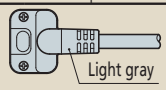 Light gray	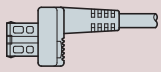	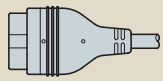		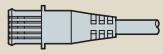	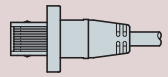
Socket shape on the measuring tool							
Codes of major compatible measuring tools and instruments	[Digimatic Caliper] **CD67-S_PM** **CD-PMX** **CD-PM/GM** **CDC-P_PMX** **CDN-P_PMX** **CFC-G/GL/GC/GU** [Digimatic Caliper] **NTD-PMX** [Digimatic Depth Gage] **VDS-PMX** [Digital Scale and DRO Systems] **SD-G**	[Digimatic Micrometer] **MDE-MJ** **MDC-MJ/MJT** [Digimatic Micrometer] The code suffix is -MJ. **BLM-M** **OMV-M** **OMP-M** **PDM-M** **IMP-M** **VM-M** [Digimatic Micrometer Heads] **MHN-M/MJ/MJN** [Digimatic Holtest] **HTD-R** [Digimatic Depth Gage] **DMC-M**	[Digimatic Caliper] **CD-CX/-C** **CD-S_C** **CDC-CX/C** **CDN-CX/C** [Digimatic Caliper] **NTD-CX/C** [Digimatic Depth Gage] **VDS-DCX** [Digital Scale and DRO Systems] **SD-D, SDV-D**	[Digimatic Indicator] **ID-H/F** [Linear Height] **QMH-S** [Linear Gage/Counter] **EB,EC-D** [µ-checker] **Digital µ-checker** [Laser Scan Micrometer] **LSM-9506** [Reference Gage] **HDM-C** [Coating Thickness Gage] **DGE-745/755** [Form Measurement] **SJ-201/301/401**	[Digimatic Micrometer] **MDQ-M** **MDC-M** **CLM1-QM/DK** **PDM-QM** **PMU-DM** **BD-M** [Digimatic Holtest] **HTD** [Reference Gage] **HDM-DM** [Hardness Testing Machines] **HM-100/200** **HV-100** **HR-500** **HH-411**	[Digimatic Caliper] **CD, CFC-P/-L/-C/-U** [Digimatic Height Gages] **HD-AX, HDM-AX** **HDS-H_C/-C** **HDM-A** **HDF-N** [Digimatic Indicator] **ID-C/_RB/_A/_GB** **ID-S/U** [Digimatic Depth Gage] **Digimatic model (ID-C)** [Digital Scale and DRO Systems] **SD-E, SDV-E** **SD-F, SDV-F** [Portable Hardness Testing Instruments] **HH-300**	[Digimatic Indicator] **ID-N** **ID-B**

Note on Wireless Communication Environment

Although the communication range for **U-WAVE** is approximately 60 ft. line-of-sight, performance may be affected by obstacles or environmental factors.

Item	Contents
Concrete wall	Communication is not possible in a completely enclosed room.
Metal partition	Communication speed may drop or communication may be interrupted.
Wireless LAN, communication device such as ZigBee Bluetooth, and microwave oven	Communication speed may drop or communication may be interrupted. Maintain the set frequency and installation distance if at all possible.
Medical instrument	Do not use this product near a medical instrument such as a laser knife or electronic scale.

Cautions

- **Safety caution:** Do not use this device near medical equipment that might malfunction due to radio interference.
- **Caution on radio law:** This device is certified as a 2.4 GHz band wide-band low-power data communication system based on the radio regulations in Japan, Europe, U.S.A. and Canada. It is prohibited by law to disassemble or modify this device or peel off the certification label from it.

Mitutoyo

Multiplexers – MIG-8USB, MIG-4USB

SERIES 982 — Digimatic/RS-232C Interface Unit

MeasurLink® ENABLED
Data Management Software by Mitutoyo

FEATURES

- A measurement data transfer device, multiplexer MIG-8USB and MIG-4USB converts digimatic output measurement data to RS-232C or USB-HID and outputs it to an external device such as PC.
- Up to eight/four measuring instruments with the digimatic output feature can be connected.
- Units can be daisy-chained to meet any size needs.
- MIG-4USB includes toggle switch for each input.

MIG-8USB



64AAB386
Front view



64AAB386
Back view

SPECIFICATIONS

Model No.	MIG-8USB	MIG-4USB
Order No.	**64AAB386**	**64AAB387**
Gage Capacity	8	4
Dimension (mm) W x D x H	146 x 150 x 45	146 x 150 x 70
Mass (g)	540	710

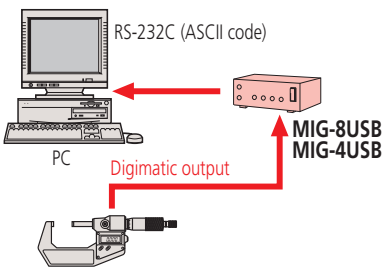

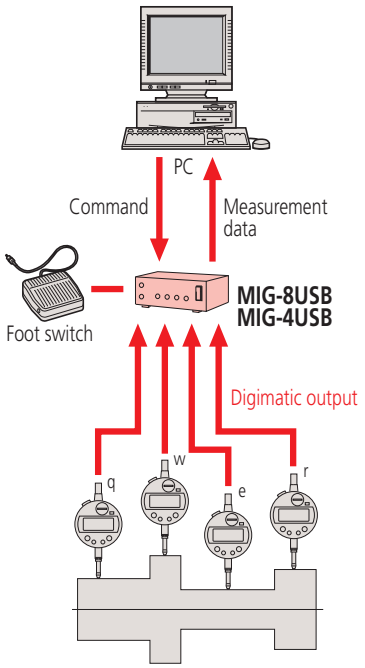

Technical Data

Data output: Via RS-232C interface / USB

Default Configuration

Data length: 8 bits
Start bit: 1 bit
Stop bit: 1 bit
Parity check: None
Baud rate: 4800

Standard Accessory

06AEG302JA: AC Adapter
RS232C: Cable (1.5m / 5ft)
USB Cable

Optional Accessories

937179T: Foot switch

Gage Selector 3

3-channel Switching Box for Data Transmission

Technical Data

Connection: Up to three gages
Signal: Digimatic code format
Connection: Bidirectional
External dimensions (W x D x H): 100 x 70 x 33mm

FEATURES

- Thee digimatic gages can be connected.
- You can specify the gage which outputs the data with the channel switch.



939039

SPECIFICATIONS

Order No.	Description
939039:	Gage Selector 3

Examples of Connections

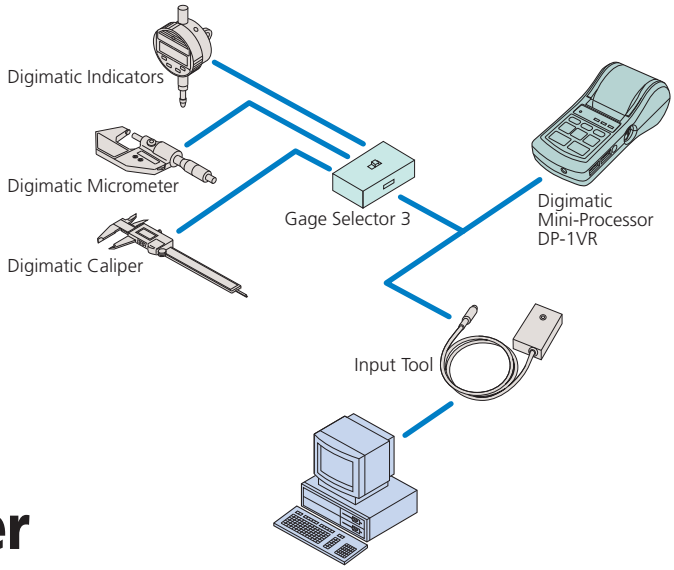

EC Counter

SERIES 542 — Assembly-type Display Unit

Technical Data

Applicable gage: LGD, LGS, All SPC output gages
Resolution: .00005"/.0001"/0.001mm,
.0005"/.001"/0.01mm
No. of gage input: 1
Display: 6-digit LED and a negative [-] sign
Function: Preset
Go-no-go judgment
Output (open-collector): 3-step limit signal, Normal signal
External control: Preset, Data hold
Power supply: Via AC adaptor
Dimensions (W x D x H): 96 x 48 x 84.6mm
Mass: 50g

Standard Accessory

06AEG302JA: AC Adapter

FEATURES

- Compact panel mounting type and DIN size. It can be easily incorporated into each system.



542-007A

SPECIFICATIONS

Order No.	Description
542-007A	EC Counter

DIMENSIONS

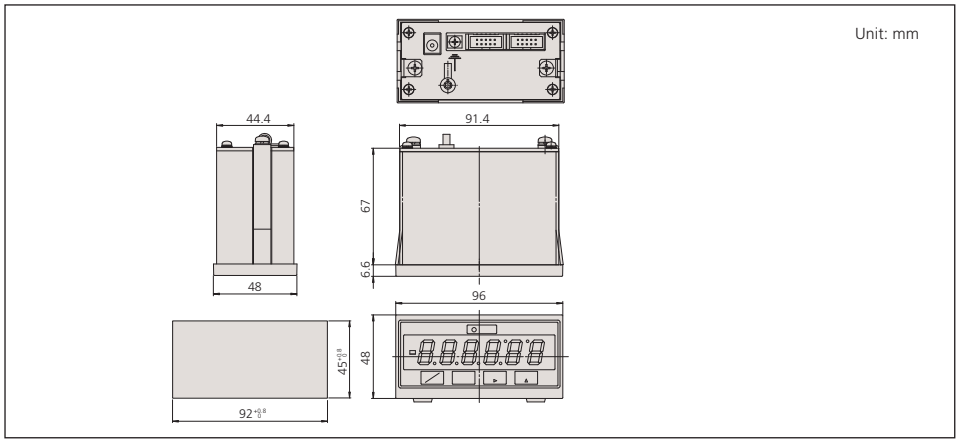

Mitutoyo

DP-1VR

SERIES 264 — Digimatic Mini-Processor

FEATURES

- This is a palm-sized printer used to print measurement data from the digimatic gage or to perform statistical analysis.
- This printer offers excellent functionality. You can use it not only to print measurement data, perform a variety of statistical analyses, and draw a histogram or D chart but also to perform complicated operations for X-R control chart.
- Equipped with RS-232C output and go/no-go judgment output as standard functions, this processor ensures high reliability as an advanced quality inspection machine.
- The line thermal printer enables fast and quiet printing.

SPECIFICATIONS

Order No.	Description
264-504-5A	DP - 1VR



264-504-5A

Technical Data

Printing method: Thermal line printer
Printing dot: 384dot (8dot/mm)
Printing speed: 6.5mm/s (using AC adapter)
Printing paper: 48m
Printing line: Approx. 6500 lines for large characters
Approx. 12000 lines for normal characters
Processing capacity: 9999 data (mode 1/2/3)
100000 data (mode 0)
Printing data: Measurement data, go/no-go judgment, No. of data, Max/min value, Range, Average, Standard deviation, No. of defective, Fraction defective, Process capability index, Histogram, D-chart, Control chart generation for Xd-bar and control limit data, date and time
Output function: Output the measuring data (RS232C) or go/no-go judgment
Input timer: 0.25s, 1s, 5s, 30s, 1min, 30min, 60min
Power: AC adapter 6V
Electric battery: LR6 (alkaline), Ni-Mh (AA size)
Battery life: 10 years (clock battery), 10000 lines (1600mA 1time/5 sec. using the nickel hydrofluoric battery)
Dimensions (W x D x H): 94 x 201 x 75.2mm
Mass: 390g

Standard Accessory

06AEG302JA: AC Adapter

Optional Accessories

09EAA084*: RS-232C changing cable (1m, 9pin)
965516*: GO/±NG judgment cable
937179T: Foot switch
09EAA082: (10 rolls)

*It is impossible to use the both RS-232C cable and GO/±NG judgment cable at the same time.



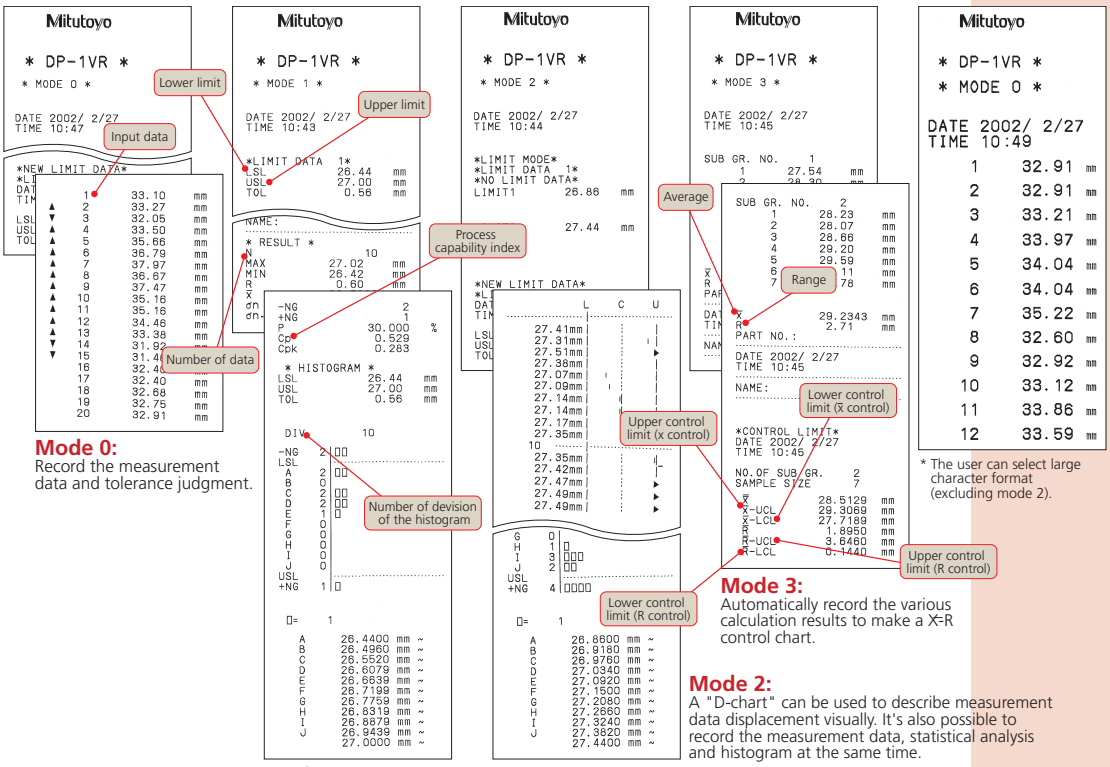

SPC Connecting Cables

- These cables are used to output measurement data from the digimatic gage with the output feature to the digimatic mini processor, digimatic display unit, multiplexer or other device.
- Cables of one or two meters are available.
- Note that the shape of connector differs depending on the model.

Input plug to Data Processor 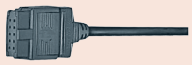	
Order No.	Applicable gages
Straight type  **905338**: 1m (40") **905409**: 2m (80")	**All CALIPERS WITHOUT ABSOLUTE ENCODER** Height Gage **570-2XX, 192-6XX, 192-67X** Indicators **575-XXX, 543-6XX, 543-2XX, 543-4XX** Depth Gages **547-21X, 547-25X, 571-2XX** Scale Unit **572-XXX** Thickness Gages **547-3XX, 547-4XX**
Back type  **905689**: 1m (40") **905690**: 2m (80")	
Right type  **905691**: 1m (40") **905692**: 2m (80")	
Left type  **905693**: 1m (40") **905694**: 2m (80")	
With data out switch type  **959149**: 1m (40") **959150**: 2m (80") **04AZB512**: 1m (40") L-Type **04AZB513**: 2m (80") L-Type	**ALL DIGIMATIC CALIPERS WITH ABSOLUTE ENCODER** Height Gage **570-2XX** Depth Gages **571-2XX** Scale Unit **572-XXX** Micrometers over 12"/300mm
With data out switch type  **05CZA624**: 1m (40") **05CZA625**: 2m (80")	Coolant-Proof Caliper **500-68X, 500-76X, 500-78X.** Coolant-Proof Digimatic scale units **572-61X.**
With data out switch type  **05CZA662**: 1m (40") **05CZA663**: 2m (80")	**Digimatic Micrometer IP65**
6 pins type  **937387**: 1m (40") **965013**: 2m (80")	**ALL MICROMETERS (not for IP65 mics)** Indicators **543-11X, 543-13X, 543-14X, 543-18X, 543-17X** Holtest **468-2XX, 468-9XX** Micrometer Head **164-162, 164-172, 350-71X, 329-71X** Boremetics **568-XXX** Others Mikematic, Quickmike Bench Mike **121-XXX**
10 pins type  **936937**: 1m (40") **965014**: 2m (80")	Indicators **543-5XX** MU-Checkers **519-4XX, 519-621A** MU-Gages **179-204, 179-205, 179-206** Display **542-022-5A, 542-032-5A, 542-036-5A** Display **572-011A, 572-031A** Linear Height **518-3XX** Litematic **318-2XX** Heightmatic **57X SERIES**. Digi Derm **179-7XX** Hardness Tester (**Micro Hardness Type**)
Flat straight type  **21EAA194:** SPC cable (40" / 1m) **21EAA190**: SPC cable (80" / 2m)	ID-N/ID-B coolant proof digimatic Indicators

Mitutoyo

Measuring System Implementation

The following introduces system implementation principles showing how measurement results from various Mitutoyo measuring instruments are recorded and used for quality control purposes.

Implementation Step 1

- **Recording and storing measurement results**

Eliminating writing by hand

Prints out measurement data easily, providing the statistical calculation function.

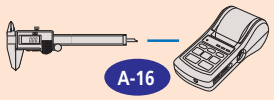

A-16

Digimatic Mini-Processor DP-1VR

To perform wireless communication

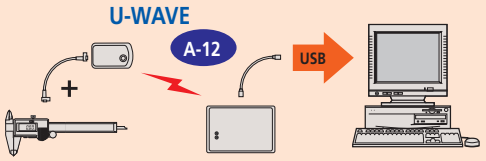

To input data to a PC

A keyboard signal conversion type Input tool can input measurement data directly into spreadsheet software such as Excel.

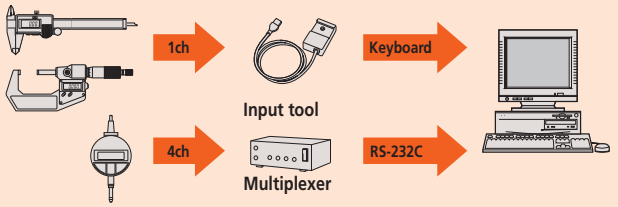

RS-232C conversion type unit requires separate communication software.

Input tool series A-10

Multiplexers A-14

Implementation Step 2

- **Using dedicated inspection and quality control software**

Setup for statistical process control

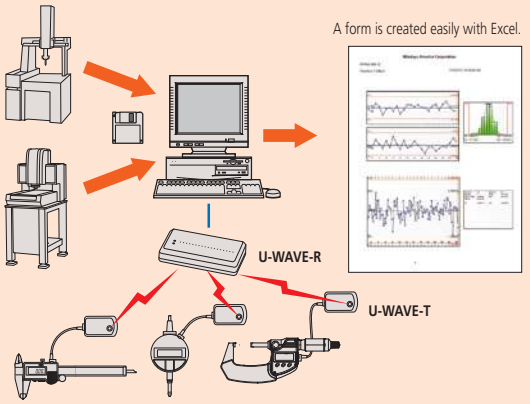

Performing statistical process control

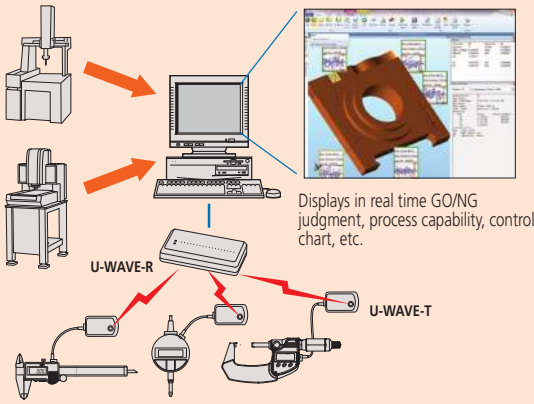

MeasurLink Real-Time A-4

Implementation Step 3

- **Networking quality control data gathered from various locations**

Centralizing and analyzing measurement results

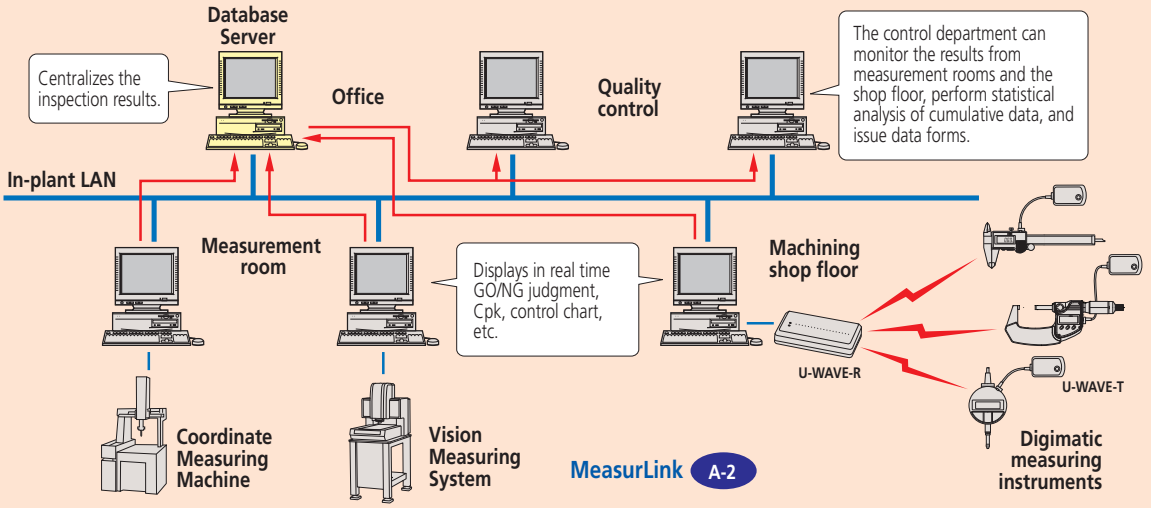





Micrometers



Micrometer Heads



MDC Micrometer



MDH Micrometer



QuantuMike



Digimatic Outside Micrometer

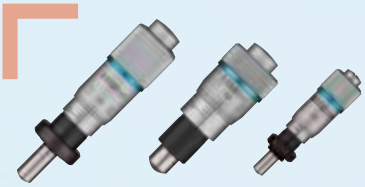

Micrometer Heads
fine spindle feed

INDEX

Micrometers	
Coolant-Proof Micrometer	B-2,3
Digimatic Micrometer	B-4
Digimatic Micrometer- MDC- Lite	B-4
MDH Micrometer	B-5
QuantuMike	B-6
ABSOLUTE Digimatic Micrometers	B-7
Quickmike	B-8
Outside Micrometers	B-9
Ratchet-Thimble Micrometer	B-10
Outside Micrometers	B-11-19
Spline Micrometers	B-20
Point Micrometers	B-21
Crimp Height Micrometers	B-22
V-Anvil Micrometers	B-23,24
Limit Micrometers	B-25
Pana Micrometers	B-26
Spherical Face Micrometers	B-27
Tube Micrometers	B-28
Uni-Mike	B-29
Sheet Metal Micrometers	B-30
Blade Micrometers	B-31
Disk Micrometers	B-32
Paper Thickness Micrometers	B-33
Disk Micrometers	B-34,35
Gear-Tooth Micrometers	B-36
Screw Thread Micrometers	B-37,38
3-Wire Thread Measuring System	B-39
Can Seam Micrometers	B-40
Hub Micrometers	B-41
Wire Micrometers	B-41
Digit Outside Micrometers	B-42
Indicating Micrometers	B-43
Snap Meters	B-43
Dial Snap Meters	B-44
Caliper-Type Micrometers	B-45
Groove Micrometers	B-46
Small-Hole Gage Set	B-47
Telescoping Gage Set	B-47
Micrometer Stands	B-48
Color Ratchet & Color Speeder	B-49
Spindle Attachment Tip	B-49
Micrometer Oil	B-49
Optical Parallels	B-50
Optical Flats	B-50
Micrometer Standards	B-51
Standards for Screw Thread Micrometers	B-52
Standards for V-Anvil Micrometers	B-52
Tool Kits	B-53,54
Micrometer Heads	
Micrometer Head Selection Guide	B-55
Digimatic Micrometer Heads	B-56
Digimatic Micrometer Heads	B-57
Micrometer Heads	B-58-71
Digital Micrometer Heads	B-72
Micrometer Heads	B-73
Micro Jack	B-72
Precision Lead Screw	B-73
Fixtures for Micrometer Heads	B-74,75

Coolant-proof Micrometer

SERIES 293 — with Dust/Water Protection Conforming to IP65 Level

FEATURES

- IP65 protection level, enabling use in environments exposed to cutting oil, etc*.
  *Anti-corrosion treatment is required after use.
- Measurement data output function is available with a water-resistant connection cable.
- Auto power ON/OFF function.
- A nonslip surface with raised dots is employed for the frame cover and surface panel to achieve stable handheld measurement.
- Certificate of inspection* is included. (2" /50mm or less range models)**
  *It is not the type used to obtain calibration certificates.
  ** except 293-349-30
- With a standard bar except for 0-1"/0-25mm model.
- Supplied in fitted case. Plastic case up to 6"/150mm, wooden box over 6"/150mm.





293-330-30



293-252-30

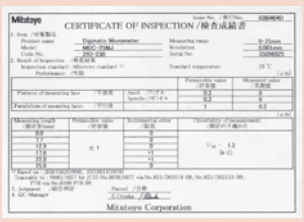

Certificate of inspection

Technical Data

Accuracy: Refer to the list of specifications.
Resolution: .00005"/0.001mm or 0.001mm (up to 4" models)
.0001" / 0.001mm (over 4" models)
Flatness: .000012"/0.3µm
Parallelism: .00004"/1µm for models up to 2"/50mm
.00008"/2µm for models up to 4"/100mm
.00012"/3µm for models up to 7"/175mm
.00016"/4µm for models up to 11"/275mm
.0002"/5µm for models over 12"/300mm
Measuring faces: Carbide tipped
Display: LCD
Battery: SR44 (1 pc.), **938882**
Battery life: Approx. 2.4 years under normal use
Dust/Water protection level: IP65

Function

Origin-set, Zero / ABS, Hold, Auto power on/off,
Data output (output models),
inch/mm conversion (on inch/metric models only)
Alarm: Low voltage, Counting value composition error

Optional Accessories

05CZA662: SPC cable with data switch (40"/1m)
05CZA663: SPC cable with data switch (80"/2m)



Oil-resistant materials are used in all plastic components.



Measurement data output function is available with a water-resistant connection cable.



SPC cable with data switch

SPECIFICATIONS

Metric With ratchet stop

Range	Resolution	Order No.	Accuracy
0 - 25mm	0.001mm	**293-230-30 / 293-240-30***	±1µm
25 - 50mm	0.001mm	**293-231-30 / 293-241-30***	±1µm
50 - 75mm	0.001mm	**293-232-30 / 293-242-30***	±1µm
75 - 100mm	0.001mm	**293-233-30 / 293-243-30***	±2µm
100 - 125mm	0.001mm	**293-250-30**	±2µm
125 - 150mm	0.001mm	**293-251-30**	±2µm
150 - 175mm	0.001mm	**293-252-30**	±3µm
175 - 200mm	0.001mm	**293-253-30**	±3µm
200 - 225mm	0.001mm	**293-254-30**	±3µm
225 - 250mm	0.001mm	**293-255-30**	±4µm
250 - 275mm	0.001mm	**293-256-30**	±4µm
275 - 300mm	0.001mm	**293-257-30**	±4µm

*without SPC data output

Metric With ratchet thimble

Range	Resolution	Order No.	Accuracy
0 - 25mm	0.001mm	**293-234-30 / 293-244-30***	±1µm
25 - 50mm	0.001mm	**293-235-30 / 293-245-30***	±1µm
50 - 75mm	0.001mm	**293-236-30 / 293-246-30***	±1µm
75 - 100mm	0.001mm	**293-237-30 / 293-247-30***	±2µm

*without SPC data output

Metric Micrometer Set

Range	Order No.	Included in set
0-50mm (2pcs. Set)	**293-966-30**	293-230-30, 293-231-30, 25mm CERA block, plastic case
0-75mm (3pcs. Set)	**293-962-30**	293-230-30, 293-231-30, 293-232-30, 2 standard bars, plastic case
0-100mm (4pcs. Set)	**293-963-30**	293-230-30, 293-231-30, 293-232-30, 293-233-30, 3 standard bars, wooden box

Inch/Metric With ratchet stop

Range	Resolution	Order No.	Accuracy
0 - 1" / 0 - 25.4mm	.00005"/0.001mm	**293-330-30 / 293-340-30***	±.00005"
1" - 2" / 25.4 - 50.8mm	.00005"/0.001mm	**293-331-30 / 293-341-30***	±.00005"
2" - 3" / 50.8 - 76.2mm	.00005"/0.001mm	**293-332-30 / 293-342-30***	±.00005"
3" - 4" / 76.2 - 101.6mm	.00005"/0.001mm	**293-333-30 / 293-343-30***	±.0001"
4" - 5" / 101.6 - 127.0mm	.0001"/0.001mm	**293-350-30**	±.0001"
5" - 6" / 127.0 - 152.4mm	.0001"/0.001mm	**293-351-30**	±.0001"
6" - 7" / 152.4 - 177.8mm	.0001"/0.001mm	**293-352-30**	±.00015"
7" - 8" / 177.8 - 203.2mm	.0001"/0.001mm	**293-353-30**	±.00015"
8" - 9" / 203.2 - 228.6mm	.0001"/0.001mm	**293-354-30**	±.00015"
9" - 10" / 228.6 - 254.0mm	.0001"/0.001mm	**293-355-30**	±.0002"
10" - 11" / 254.0 - 279.4mm	.0001"/0.001mm	**293-356-30**	±.0002"
11" - 12" / 279.4 - 304.8mm	.0001"/0.001mm	**293-357-30**	±.0002"

*without SPC data output

Inch/Metric With ratchet thimble

Range	Resolution	Order No.	Accuracy
0 - 1" / 0 - 25.4mm	.00005" / 0.001mm	**293-334-30 / 293-344-30***	±.00005"
0 - 1" / 0 - 25.4mm	.0001" / 0.001mm	**293-349-30***	±.0001"
1" - 2"/ 25.4 - 50.8mm	.00005" / 0.001mm	**293-345-30***	±.00005"
2" - 3" / 50.8 - 76.2mm	.00005" / 0.001mm	**293-346-30***	±.00005"
3" - 4" / 76.2 - 101.6mm	.00005" / 0.001mm	**293-347-30***	±.0001"

*without SPC data output

Inch/Metric With friction thimble

Range	Resolution	Order No.	Accuracy
0 - 1" / 0 - 25.4mm	.00005" / 0.001mm	**293-335-30 / 293-348-30***	±.00005"
1" - 2"/ 25.4 - 50.8mm	.00005" / 0.001mm	**293-336-30**	±.00005"

*without SPC data output

Inch/Metric Micrometer Set .00005" / 0.001mm graduation model

Range	Order No.	Included in set
0 - 3" / 0 - 76.2mm (3 pcs. set)	**293-960-30**	293-330-30, 293-331-30, 293-332-30, 2 standard bars, plastic case
0 - 4" / 0 - 101.6mm (4 pcs. set)	**293-961-30**	293-330-30, 293-331-30, 293-332-30, 293-333-30, 3 standard bars, wooden box

DIMENSIONS AND MASS

Ratchet-stop type (up to 100mm/4")

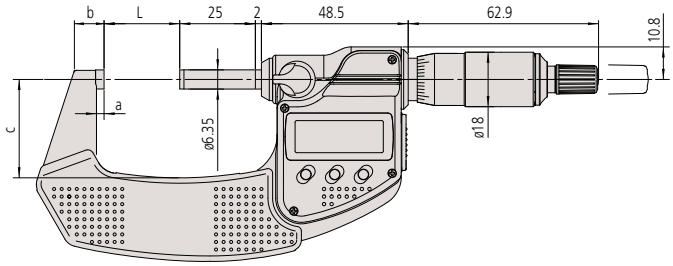

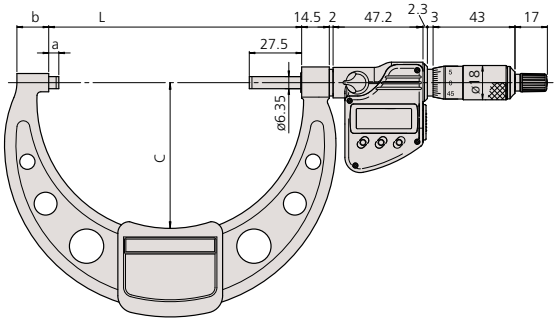

Ratchet stop type (over 100mm/4" to 300mm/12")

Ratchet-thimble type and friction-thimble type

Unit: mm

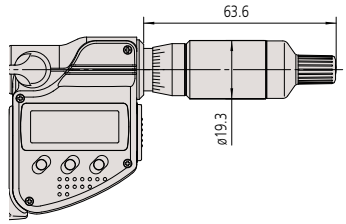

Range (Metric / Inch)	L	a	b	c	Mass (g)
0 - 25mm / 0-1"	0	2.5	9	(25)	270
25 - 50mm / 1-2"	25	2.5	9.8	(32.5)	330
50 - 75mm / 2-3"	50	2.5	12.6	(47)	470
75 - 100mm / 3-4"	75	2.5	14	(60)	625
100 - 125mm / 4-5"	132.8	5.3	16.7	(76.5)	600
125 - 150mm / 5-6"	158.2	5.7	18.8	(91)	740
150 - 175mm / 6-7"	183.6	6.1	19.1	(103.1)	800
175 - 200mm / 7-8"	208.8	6.3	18.2	(115.3)	970
200 - 225mm / 8-9"	234.2	6.7	16.8	(126.8)	1100
225 - 250mm / 9-10"	258	5.5	18	(139.8)	1270
250 - 275mm / 10-11"	284	18	28	(152.3)	1340
275 - 300mm / 11-12"	309	18	28	(166)	1540

Mitutoyo

Digimatic Micrometer

SERIES 293

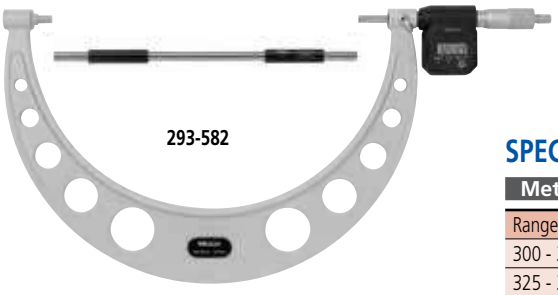

DIMENSIONS

Unit: mm

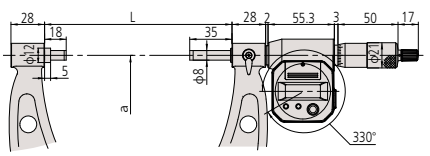

Range	L	a	Mass(g)
300 - 325mm/12-13"	353	187	2000
325 - 350mm/13-14"	378	199	2150
350 - 375mm/14-15"	403	212	2300
375 - 400mm/15-16"	428	224	2450
400 - 425mm/16-17"	453	236	2600
425 - 450mm/17-18"	478	248	2750
450 - 475mm/18-19"	503	261	2900
475 - 500mm/19-20"	528	273	3100

SPECIFICATIONS

Metric With ratchet stop

Range	Resolution	Order No.	Accuracy
300 - 325mm	0.001mm	**293-582**	±6μm
325 - 350mm	0.001mm	**293-583**	±6μm
350 - 375mm	0.001mm	**293-584**	±6μm
375 - 400mm	0.001mm	**293-585**	±7μm
400 - 425mm	0.001mm	**293-586**	±7μm
425 - 450mm	0.001mm	**293-587**	±7μm
450 - 475mm	0.001mm	**293-588**	±8μm
475 - 500mm	0.001mm	**293-589**	±8μm

Inch/Metric With ratchet stop

Range	Resolution	Order No.	Accuracy
12" - 13" / 304.8 - 330.2mm	.0001" / 0.001mm	**293-782**	±.0003"
13" - 14" / 330.2 - 355.6mm	.0001" / 0.001mm	**293-783**	±.0003"
14" - 15" / 355.6 - 381.0mm	.0001" / 0.001mm	**293-784**	±.0003"
15" - 16" / 381.0 - 406.4mm	.0001" / 0.001mm	**293-785**	±.00035"
16" - 17" / 406.4 - 431.8mm	.0001" / 0.001mm	**293-786**	±.00035"
17" - 18" / 431.8 - 457.2mm	.0001" / 0.001mm	**293-787**	±.00035"
18" - 19" / 457.2 - 482.6mm	.0001" / 0.001mm	**293-788**	±.0004"
19" - 20" / 482.6 - 508.0mm	.0001" / 0.001mm	**293-789**	±.0004"

Technical Data

Accuracy: Refer to the list of specifications.
Resolution: .0001"/0.001mm or 0.001mm
Flatness: .000024" / 0.6μm
Parallelism: .0002"/ 5μm for models up to 15"/ 375mm
.00024"/ 6μm for models up to 19"/ 475mm
.00028"/ 7μm for models over 20"/ 500mm
Measuring faces: Carbide tipped
Display: LCD
Battery: SR44 (2 pcs.), **938882**
Battery life: Approx. 1.8 years under normal use

Function

Preset, Zero-setting, Power ON/OFF, Data hold, Data output, inch/mm conversion (on inch/metric models only)
Alarm: Low voltage, Counting value composition error

Optional Accessories

959149: SPC cable (40"/1m) Straight type
959150: SPC cable (80"/2m) Straight type
04AZB512: SPC cable L-type (40"/1m)
04AZB513: SPC cable L-type (80"/2m)



Digimatic Micrometer

SERIES 293 MDC-Lite

FEATURES

- Provided only with zero set and in/mm (inch/metric models only) keys.
- A ratchet stop or friction thimble for a constant measuring force.
- Measurement readout with large characters on the LCD.
- No spindle clamp. No data output.
- Supplied in fitted plastic case.



293-831-30

SPECIFICATIONS

Metric With ratchet stop

Range	Resolution	Order No.	Accuracy
0 - 25mm	0.001mm	**293-821-30**	±2μm

Inch/Metric With ratchet stop

Range	Resolution	Order No.	Accuracy
0 - 1" / 0 - 25.4mm	.00005" / 0.001mm	**293-831-30**	±.0001"

Inch/Metric With friction thimble

Range	Resolution	Order No.	Accuracy
0 - 1" / 0 - 25.4mm	.00005" / 0.001mm	**293-832-30**	±.0001"

DIMENSIONS AND MASS

Unit: mm

Ratchet stop

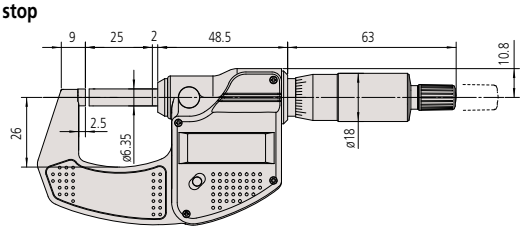

Friction thimble

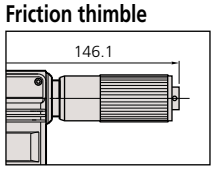

MASS: 270g

Technical Data

Accuracy: Refer to the list of specifications
Resolution: .00005"/0.001mm or 0.001mm
Flatness: .000012" / 0.3μm
Parallelism: .00008" / 2μm
Measuring faces: Carbide tipped
Display: LCD
Battery: SR44 (1 pc.), **938882**
Battery life: Approx. 2.4 years under normal use

Function

Origin-set, Automatic power on/off,
inch/mm conversion (on inch/metric models only)
Alarm: Low voltage, Counting value composition error



MDH Micrometer

SERIES 293 — High-Accuracy Sub-Micron Digimatic Micrometer

Technical Data

Flatness: 0.3µm/.000012"
Parallelism: 0.6µm/.000024
Measuring force: 7 to 9N
Power supply: Lithium battery **05SAA217** (CR2032) x 1
Battery life: Approx. two years when used under normal conditions

Functions

Preset (ABS measurement system)
Zero-setting (INC measurement system)
Hold, Resolution switching, Function lock, On/off, Auto power off, Measurement data output, Error alarm

Optional Accessories

05CZA662: SPC cable with data switch (1m/40")
05CZA663: SPC cable with data switch (2m/80")





Function lock

Heat shield





FEATURES

- Enabling .000005"/ 0.1µm resolution measurement, this micrometer is ideal for customers who need to make highly accurate measurements with a handheld tool.
- A highly rigid frame and high-performance constant-force mechanism* enable more stable measurements, while the clicks emitted while the workpiece is being measured assure the operator that measurement is proceeding normally.

* Patent pending in Japan, the United States of America, the European Union and China.

- Body heat transferred to the instrument is reduced by a (removable) heat shield, minimizing the error caused by thermal expansion of the frame when performing handheld measurements.
- The ABS (absolute) rotary sensor also eliminates the need to perform origin setting each time the power is turned on, letting you start measuring right away. With no possibility of overspeed errors, the High-Accuracy Digimatic Micrometer also delivers a high level of reliability.



293-130

SPECIFICATIONS

Metric

Order No.	Range	Resolution	Accuracy	Measuring surface	Mass
293-100	0 - 25mm	0.0001mm/ 0.0005mm (switchable)	±0.5µm	ø3.2mm	400g (440g w/Heat shield)

Inch/Metric

Order No.	Range	Resolution	Accuracy	Measuring surface	Mass
293-130	0 - 1" 0 - 25.4mm	.000005"/.00002" 0.0001mm/0.0005mm (switchable)	±.00002"	ø3.2mm	400g (440g w/Heat shield)

DIMENSIONS

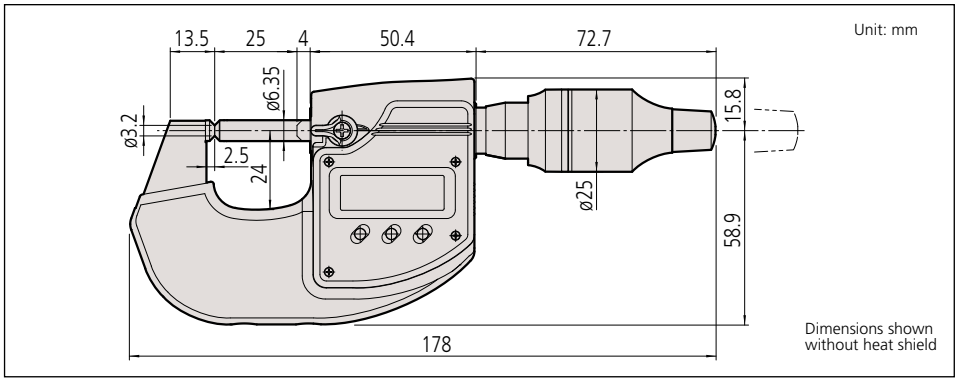

Mitutoyo

QuantuMike

SERIES 293 — Coolant-proof Micrometer

FEATURES

- Faster measurement with 2mm per revolution instead of the standard 0.5mm.
- A patented ratchet thimble mechanism helps ensure repeatability.
- A function lock helps prevent error.
- IP-65 protection level.
- Certificate of inspection provided.
- With a standard bar except for 0-25mm/0-1" model.
- Supplied in fitted plastic case.



293-180



293-142

SPECIFICATIONS

Metric

Range	Resolution	Order No.	Accuracy
0-25mm	0.001mm	**293-140**	1um
0-25mm	0.001mm	**293-145***	1um
25-50mm	0.001mm	**293-141**	1um
25-50mm	0.001mm	**293-146***	1um
50-75mm	0.001mm	**293-142**	2um
50-75mm	0.001mm	**293-147***	2um
75-100mm	0.001mm	**293-143**	2um
75-100mm	0.001mm	**293-148***	2um

* without SPC data output

Inch/Metric

Range	Resolution	Order No.	Accuracy
0-1"/0 - 25.4mm	.00005"/0.001mm	**293-180**	.00005"
0-1"/0 - 25.4mm	.00005"/0.001mm	**293-185***	.00005"
1-2"/25.4 - 50.8mm	.00005"/0.001mm	**293-181**	.00005"
1-2"/25.4 - 50.8mm	.00005"/0.001mm	**293-186***	.00005"
2-3"/50.8 - 76.2mm	.00005"/0.001mm	**293-182**	.0001"
2-3"/50.8 - 76.2mm	.00005"/0.001mm	**293-187***	.0001"
3-4"/76.2 - 101.6mm	.00005"/0.001mm	**293-183**	.0001"
3-4"/76.2 - 101.6mm	.00005"/0.001mm	**293-188***	.0001"

* without SPC data output

DIMENSIONS AND MASS

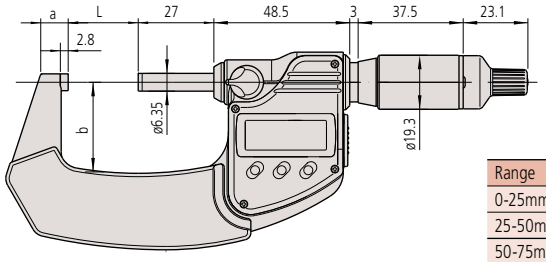

Unit: mm

Model=25-50mm/1-2"

Range	L	a	b	Mass(g)
0-25mm/0-1"	0	9	25	265
25-50mm/1-2"	25	9.8	32	325
50-75mm/2-3"	50	12.6	47	465
75-100mm/3-4"	75	14	60	620

PROPRIETARY INSPECTION CERTIFICATE



Certificate of inspection

Technical Data

Accuracy: Refer to the list of specifications
Resolution: 0.001mm or .00005"/0.001mm
Flatness: 0.3µm/.000012"
Parallelism: 1µm/.00004" for models up to 50mm/2"
2µm/.00008" for models up to 100mm/4"
Measuring force: 7-12N
Measuring faces: Carbide tipped
Display: LCD
Battery: SR44 (1 pc.), **938882**
Battery life: Approx. 1.2 years under normal use
Dust/Water protection level: IP65

Function

Origin-set, Zero / ABS, Hold, Function lock, Auto power on/off, Data output (output models), inch/mm conversion (on inch/metric models only)
Alarm: Low voltage, Counting value composition error

Optional Accessories

05CZA662: SPC cable with data switch (1m/40")
05CZA663: SPC cable with data switch (2m/80")



SPC cable with data switch

516-529-26 Inspection Gage Block Set
Rectangular Steel Gage Block
10 pc. blocks and 1 pc. optical parallel

516-319-26 Inspection Gage Block Set
Rectangular Cera Gage Block
10 pc. blocks and 1 pc. optical parallel



Ratchet-induced microvibrations along the spindle help ensure repeatable measurements.

Significant reduction in positioning time

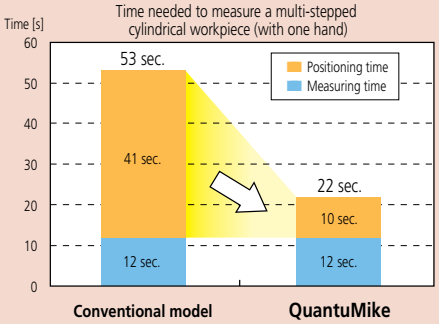

SPC

ABSOLUTE®
Absolute System Patented by MITUTOYO

ABSOLUTE Digimatic Micrometers

SERIES 227 — with Adjustable Measuring Force

Technical Data

Accuracy: Refer to the list of specifications
Resolution: .00005"/0.001mm or 0.001mm
Flatness: .000012" / 0.3µm
Parallelism: .00008" / 2µm
Accuracy of selected measuring force:
± (0.1+selected measuring force/10)N
for 0.5-2.5N models
± (0.4+selected measuring force/10)N
for 2-10N models

Measuring faces: Carbide tipped
Display: LCD
Battery: SR44 (1 pc.), **938882**
Battery life: Approx. 3 years under normal use
(1 year for .6 - 1.2" / 15-30mm, .4 -.8"/
10-20mm, .8-1.2"/20-30mm range model)

Function

Origin, Hold / Data, ON/OFF, Zero / ABS,
inch/mm conversion (on inch/metric models only)
Alarm: Low voltage, Counting value composition error

Optional Accessories

937387: SPC cable (40"/ 1m)
965013: SPC cable (80"/ 2m)





FEATURES

- Constant and low measuring force mechanism in the thimble.
- Adjustable measuring force* accommodates various types of work materials.
  *0.5-2.5N or 2-10N
- The measurement-value hold function automatically retains the data at a specified measuring force, ensuring accuracy.
- Non-rotating spindle and the new ratchet friction thimble.
- Speedy spindle feed by .4"/rev and 10mm/rev for inch/metric model.
- With absolute linear scale.
- With SPC data output.
- With a standard bar to set the origin point (except for 0-15mm, 0-10mm, 0-.6", and 0-.4" models).
- Supplied in fitted plastic case.



227-201

SPECIFICATIONS

Metric

Order No.	Range	Resolution	Accuracy	Measuring Force	Mass(g)
227-201	0-15mm	0.001mm	±2µm	0.5-2.5 (0.5, 1.0, 1.5, 2, 2.5) N	300
227-203	15-30mm	0.001mm	±2µm	0.5-2.5 (0.5, 1.0, 1.5, 2, 2.5) N	380
227-205	0-10mm	0.001mm	±2µm	2-10 (2, 4, 6, 8, 10) N	340
227-206	10-20mm	0.001mm	±2µm	2-10 (2, 4, 6, 8, 10) N	425
227-207	20-30mm	0.001mm	±2µm	2-10 (2, 4, 6, 8, 10) N	415

Inch/Metric

Order No.	Range	Resolution	Accuracy	Measuring Force	Mass(g)
227-211	0-.6"	.00005"/0.001mm	±.0001"	0.5-2.5 (0.5, 1.0, 1.5, 2, 2.5) N	300
227-213	.6-1.2"	.00005"/0.001mm	±.0001"	0.5-2.5 (0.5, 1.0, 1.5, 2, 2.5) N	380
227-215	0-.4"	.00005"/0.001mm	±.0001"	2-10 (2, 4, 6, 8, 10) N	340
227-216	.4-.8"	.00005"/0.001mm	±.0001"	2-10 (2, 4, 6, 8, 10) N	425
227-217	.8-1.2"	.00005"/0.001mm	±.0001"	2-10 (2, 4, 6, 8, 10) N	415

DIMENSIONS AND MASS

Unit: mm

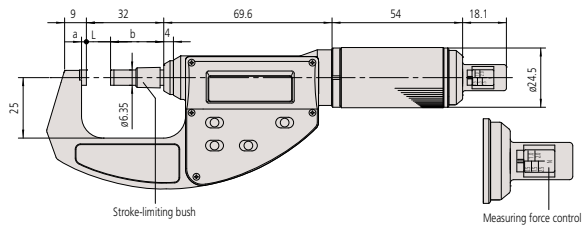

Range	L	a	b
0 - 15mm	15	2	17
0 - 10mm	10	2	22

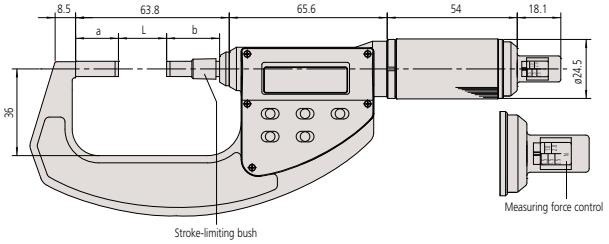

Range	L	a	b
15 - 30mm	30	12.8	17
10 - 20mm	20	17.8	22
20 - 30mm	30	7.8	22

Mitutoyo

Quickmike

SERIES 293 — IP-54 ABSOLUTE Digimatic Micrometers

The Quickmike provides a speedy spindle feed of 10mm / .4" per thimble rotation as compared to the conventional micrometer with 0.5mm / .025" per rotation. Its wide 30mm / 1.2" measuring range allows various workpieces with different shapes to be measured quickly.

FEATURES

- Non-rotating spindle and the new ratchet friction thimble.
- Speedy spindle feed by 10mm/rev and .4"/rev for inch/metric models.
- With absolute linear scale.
- IP54 dust/water protection (when not connected with data output cable).
- With SPC data output.
- With a standard bar to set the origin point (for models with a range over 30mm / 1.2").
- Supplied in fitted plastic case.



293-676



293-677



293-678



293-679

Technical Data

Accuracy: Refer to the list of specifications
Resolution: 0.001mm or .00005"/0.001mm
Flatness: 0.3µm / .000012"
Parallelism: 2µm / .00008" for models up to 80mm / 3.2"
3µm / .00012" for models up to 105mm / 4.2"
Measuring force: 5-10N
Measuring faces: Carbide tipped
Display: LCD
Battery: SR44 (1 pc.), **938882**
Battery life: Approx. 3 years under normal use
(1 year for models over 30mm / 1.2")
Dust/Water protection level: IP54

SPECIFICATIONS

Metric

Range	Resolution	Order No.	Accuracy
0 - 30mm	0.001mm	**293-666**	±2µm
25 - 55mm	0.001mm	**293-667**	±2µm
50 - 80mm	0.001mm	**293-668**	±3µm
75 - 105mm	0.001mm	**293-669**	±3µm

Inch/Metric

Range	Resolution	Order No.	Accuracy
0 - 1.2" / 0 - 30.48mm	.00005" / 0.001mm	**293-676**	±.0001"
1" - 2.2" / 25.4 - 55.88mm	.00005" / 0.001mm	**293-677**	±.0001"
2" - 3.2" / 50.8 - 81.28mm	.00005" / 0.001mm	**293-678**	±.00015"
3" - 4.2" / 76.2 - 106.68mm	.00005" / 0.001mm	**293-679**	±.00015"

DIMENSIONS AND MASS

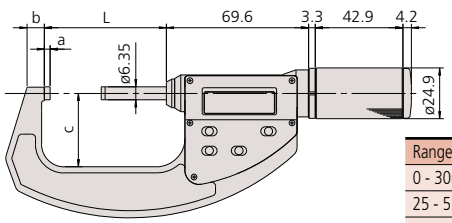

Unit: mm

Range	L	a	b	c	Mass
0 - 30mm / 0 - 1.2"	34.8	2.8	6.2	25	275
25 - 55mm / 1 - 2.2"	59.8	2.8	8.5	36	355
50 - 80mm / 2 - 3.2"	84.8	2.8	10.3	47	525
75 - 105mm / 3 - 4.2"	109.8	2.8	10.7	60	625

Function

Origin, Hold / Data, ON/OFF, Zero / ABS,
inch/mm conversion (on inch/metric models only)
Alarm: Low voltage, Counting value composition error

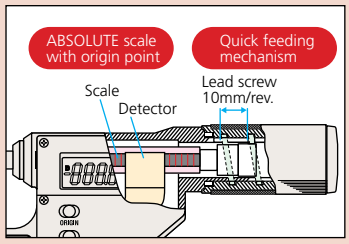

Optional Accessories

937387: SPC cable (1m / 40")
965013: SPC cable (2m / 80")

Outside Micrometers

SERIES 101

Technical Data

Graduation: .0001"
Flatness: .000024"
Parallelism: .00008" for models up to 3"
.00012" for models over 3"
Measuring faces: Carbide tipped

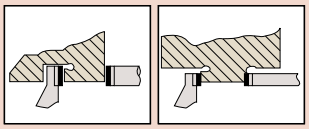

FEATURES

- Satin chrome-finished frame, tapered (on the anvil side) for hard-to-reach places.
- With a standard bar except for 0 - 1" models.
- Supplied in fitted plastic case.

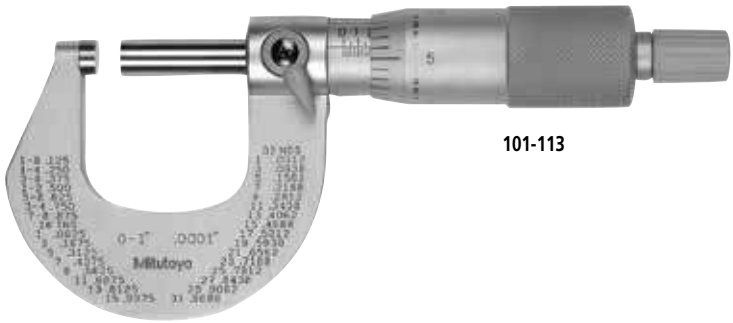

101-113

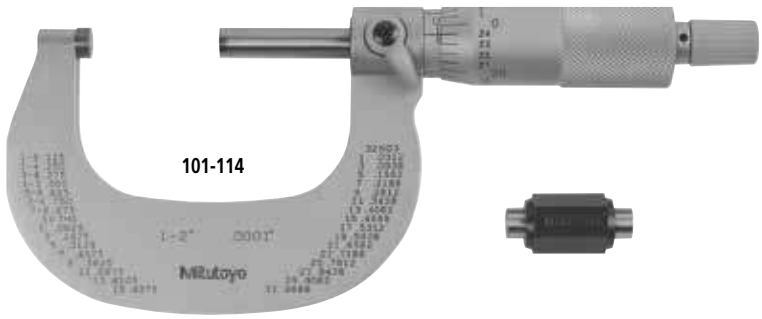

101-114

SPECIFICATIONS

Inch With friction thimble

Range	Graduation	Order No.	Accuracy	Mass (g)
0 - 1"	.0001"	**101-117***	±.0001"	180
1 - 2"	.0001"	**101-118***	±.0001"	245

*.0001" reading is obtained with vernier.

Inch With ratchet stop

Range	Graduation	Order No.	Accuracy	Mass (g)
0 - 1"	.0001"	**101-113***	±.0001"	180
1 - 2"	.0001"	**101-114***	±.0001"	245
2 - 3"	.0001"	**101-119***	±.0001"	410
3 - 4"	.0001"	**101-120***	±.00015"	550

*.0001" reading is obtained with vernier.

DIMENSIONS

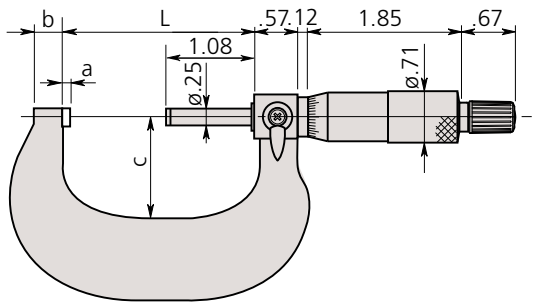

Unit: inch

Range	L	a	b	c
0 - 1"	1.18	.10	.20	1.10
1 - 2"	2.16	.08	.31	1.28
2 - 3"	3.19	.11	.33	1.77
3 - 4"	4.19	.11	.33	2.28

Note: The shape of the thimble changes on the model with friction thimble.

Mitutoyo

Ratchet Thimble Micrometer

SERIES 101, 102 — New smoother action ratchet thimble

FEATURES

- Ratchet function works both from the thimble and the speeder, allowing easy one-handed operation.
- Clearly audible ratchet operation for reassurance that measurement is being performed at constant, preset force.
- Provided with a Certificate of Inspection.
- With a standard bar except for 0 - 25mm and 0 - 1" models.
- Supplied in fitted plastic case.

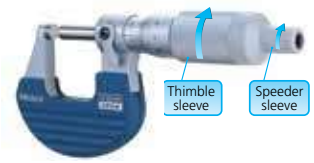



102-701



102-702

SPECIFICATIONS

Metric

Range	Graduation	Order No.	Accuracy
0 - 25mm	0.01mm	**102-701**	±2µm
0 - 25mm	0.001mm	**102-707***	±2µm
25 - 50mm	0.01mm	**102-702**	±2µm
25 - 50mm	0.001mm	**102-708***	±2µm

*0.001mm reading is obtained with vernier.

Inch

Range	Graduation	Order No.	Accuracy
0 - 1"	.001"	**101-711**	±.0001"
	.0001"	**101-717***	±.0001"
	.0001"	**102-717***	±.0001"
1 - 2"	.0001"	**102-718***	±.0001"

*.0001" reading is obtained with vernier.

DIMENSIONS AND MASS

Unit: mm

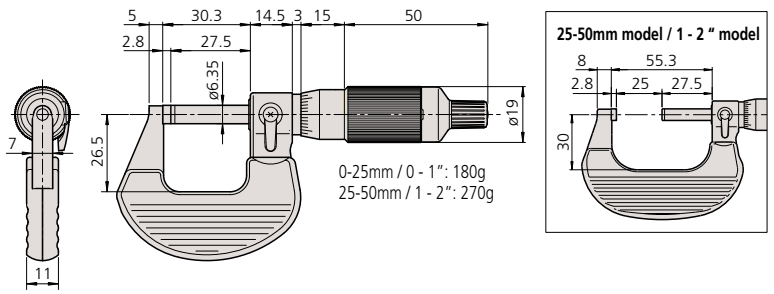

Technical Data

Graduation: 0.01mm, 0.001mm, .001" or .0001"
Flatness: 0.6µm / .000024"
Parallelism: 2µm / .00008"
Measuring faces: Carbide tipped
Measuring force: 5-10N

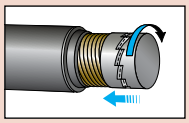

Rotating the thimble/speeder sleeve when the workpiece is between the anvil and spindle causes the ratchet mechanism to tap the spindle and apply a constant measuring force to the workpiece.

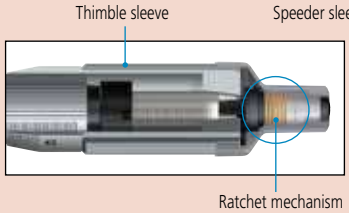







Outside Micrometers

SERIES 102

PROPRIETARY INSPECTION CERTIFICATE

Mitutoyo guarantees the product quality.

Technical Data

Graduation: 0.01mm
Flatness: 0.3µm
Parallelism: 1µm for 25mm model
3µm for models up to 100mm
Measuring faces: Carbide tipped

Ratchet-stop type



FEATURES

- Heat-insulated frame, tapered (on the anvil side) for hard-to-reach places.
- With a standard bar except for 0 - 25mm model.
- A ratchet stop for a constant measuring force.
- Supplied in a fitted plastic case.



102-301

SPECIFICATIONS

Metric With ratchet stop

Range	Graduation	Order No.	Accuracy
0 - 25mm	0.01mm	**102-301**	±2µm
25 - 50mm	0.01mm	**102-302**	±2µm
50 - 75mm	0.01mm	**102-303**	±2µm
75 - 100mm	0.01mm	**102-304**	±3µm

Metric Micrometer set 0.01mm Graduation model

Range	Order No.	Included in set
0 - 100mm (4 pcs/set)	**102-911-40**	• **102-301** **102-302** **102-303** **102-304** • 3 micrometer standards

DIMENSIONS AND MASS

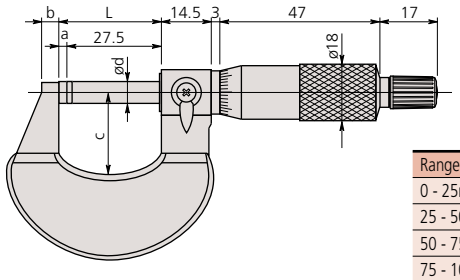

Unit: mm

Range	L	a	b	c	d	Mass (g)
0 - 25mm	30.3	2.8	5	26	6.35	180
25 - 50mm	55.3	2.8	8	32	6.35	270
50 - 75mm	80.3	2.8	9	45	6.35	375
75 - 100mm	105.3	2.8	10	58	6.35	490

Mitutoyo

Outside Micrometers

SERIES 103

Mitutoyo guarantees the product quality. PROPRIETARY INSPECTION CERTIFICATE Mitutoyo guarantees the product quality.

FEATURES

- Hammertone, baked-enamel-finished frame.
- Ratchet stop for exact repetitive readings.
- With a standard bar except for 0-25mm model.

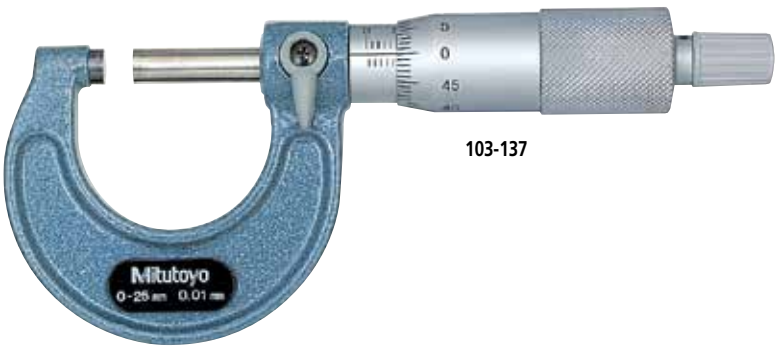

103-137

Technical Data

Graduation: 0.01mm, 0.001mm
Flatness: 0.6 µm for models up to 300mm/12"
1µm for models over 300mm/12"
Parallelism: (2+R/100)µm, R=max, range (mm)
Measuring faces: Carbide tipped

SPECIFICATIONS

Metric With ratchet stop

Range	Order No.	Accuracy	Mass (g)
0 - 25mm	**103-137**	±2µm	175
	103-129*	±2µm	175
25 - 50mm	**103-138**	±2µm	215
	103-130*	±2µm	215
50 - 75mm	**103-139-10**	±2µm	315
75 - 100mm	**103-140-10**	±3µm	375
100 - 125mm	**103-141-10**	±3µm	515
125 - 150mm	**103-142-10**	±3µm	665
150 - 175mm	**103-143-10**	±4µm	720
175 - 200mm	**103-144-10**	±4µm	920
200 - 225mm	**103-145-10**	±4µm	1080
225 - 250mm	**103-146-10**	±5µm	1255
250 - 275mm	**103-147-10**	±5µm	1405
275 - 300mm	**103-148-10**	±5µm	1565
300 - 325mm	**103-149**	±6µm	1985
325 - 350mm	**103-150**	±6µm	2155
350 - 375mm	**103-151**	±6µm	2305
375 - 400mm	**103-152**	±7µm	2455
400 - 425mm	**103-153**	±7µm	2715
425 - 450mm	**103-154**	±7µm	2965
450 - 475mm	**103-155**	±8µm	3215
475 - 500mm	**103-156**	±8µm	3450
(Models with a range up to 1000mm are available.)			

*0.001mm reading is obtained with vernier.

DIMENSIONS AND MASS

Up to 300mm / 12"

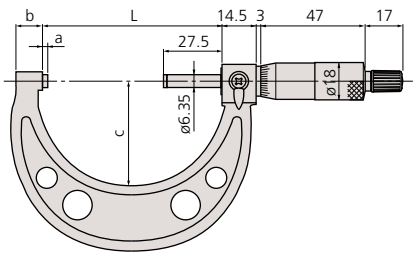

Range	L	a	b	c
0 - 25mm / 0 - 1"	30.3	2.8	9	28
25 - 50mm / 1 - 2"	55.3	2.8	10	38
50 - 75mm / 2 - 3"	80.3	2.8	12	49
75 - 100mm / 3 - 4"	105.3	2.8	14	60
100 - 125mm / 4 - 5"	132.8	5.3	17	79
125 - 150mm / 5 - 6"	158.2	5.7	19	94
150 - 175mm / 6 - 7"	183.6	6.1	20	106
175 - 200mm / 7 - 8"	208.8	6.3	19	118
200 - 225mm / 8 - 9"	234.2	6.7	18	130
225 - 250mm / 9 - 10"	258	5.5	18	143
250 - 275mm / 10 - 11"	284	6.5	18	156
275 - 300mm / 11 - 12"	309	6.5	18	169

Over 300mm / 12"

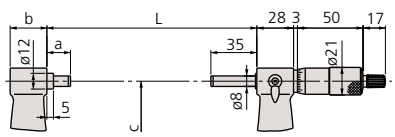

Range	L	a	b	c
300 - 325mm / 12-13"	353	18	28	187
325 - 350mm / 13-14"	378	18	28	199
350 - 375mm / 14-15"	403	18	28	212
375 - 400mm / 15-16"	428	18	28	224
400 - 425mm / 16-17"	453	18	28	236
425 - 450mm / 17-18"	478	18	28	248
450 - 475mm / 18-19"	503	18	28	261
475 - 500mm / 19-20"	528	18	28	273

Metric Micrometer set

Range	Order No.	Included in set	Mass (g)
0 - 75mm (3 pc. set)	**103-927-10**	**103-137, 103-138, 103-139-10,** 2 micrometer standards	750
0 - 150mm (6 pc. set)	**103-913-50**	**103-137, 103-138, 103-139-10, 103-140-10, 103-141-10, 103-142-10,** 5 micrometer standards	2260
150 - 300mm (6 pc. set)	**103-915-10**	**103-143-10, 103-144-10, 103-145-10, 103-146-10, 103-147-10, 103-148-10**, 6 micrometer standards	7695
0 - 300mm (12 pc. set)	**103-914-50**	All micrometers of **103-913-50** and **103-915-10** in one set, 11 micrometer standards	9300

Outside Micrometers

SERIES 103— Inch Models

FEATURES

- Hammertone, baked-enamel-finished frame.
- Ratchet stop or friction thimble for exact repetitive readings.
- With a standard bar except for 0-1″ model.



103-177



103-260

Technical Data (Inch Model)

Accuracy: Refer to the list of specifications
Graduation: .001" or .0001"
Flatness: .000024″ for models up to 12″
.00004″ for models over 12″
Parallelism: [.00008 + .00004 (L/4)]″ L= max range (inch)
Measuring faces: Carbide tipped

SPECIFICATIONS

Inch With ratchet stop

Range	Graduation	Order No.	Accuracy	Mass (g)
0 - 1"	.001"	**103-177**	±.0001"	175
1 - 2"	.001"	**103-178**	±.0001"	215
2 - 3"	.001"	**103-179**	±.0001"	315
3 - 4"	.001"	**103-180**	±.00015"	375
4 - 5"	.001"	**103-181**	±.00015"	515
5 - 6"	.001"	**103-182**	±.00015"	665
6 - 7"	.001"	**103-183**	±.0002"	720
7 - 8"	.001"	**103-184**	±.0002"	920
8 - 9"	.001"	**103-185**	±.0002"	1080
9 - 10"	.001"	**103-186**	±.00025"	1255
10 - 11"	.001"	**103-187**	±.00025"	1405
11 - 12"	.001"	**103-188**	±.00025"	1565
12 - 13"	.001"	**103-189**	±.0003"	1985
13 - 14"	.001"	**103-190**	±.0003"	2155
14 - 15"	.001"	**103-191**	±.0003"	2305
15 - 16"	.001"	**103-192**	±.00035"	2455
16 - 17"	.001"	**103-193**	±.00035"	2715
17 - 18"	.001"	**103-194**	±.00035"	2965
18 - 19"	.001"	**103-195**	±.0004"	3215
19 - 20"	.001"	**103-196**	±.0004"	3450
20 - 21"	.001"	**103-197**	±.0004"	4060
21 - 22"	.001"	**103-198**	±.00045"	4080
22 - 23"	.001"	**103-199**	±.00045"	4500
23 - 24"	.001"	**103-200**	±.00045"	4525
24 - 25"	.001"	**103-201**	±.0005	4915
25 - 26"	.001"	**103-202**	±.0005"	4930
26 - 27"	.001"	**103-203**	±.0005"	5200
27 - 28"	.001"	**103-204**	±.00055"	5215
28 - 29"	.001"	**103-205**	±.00055"	5835
29 - 30"	.001"	**103-206**	±.00055"	5860
30 - 31"	.001"	**103-207**	±.0006"	6385
31 - 32"	.001"	**103-208**	±.0006"	6410
32 - 33"	.001"	**103-209**	±.0006"	6925
33 - 34"	.001"	**103-210**	±.00065"	6940
34 - 35"	.001"	**103-211**	±.00065"	7565
35 - 36"	.001"	**103-212**	±.00065"	7590
36 - 37"	.001"	**103-213**	±.0007"	8215
37 - 38"	.001"	**103-214**	±.0007"	8240
38 - 39"	.001"	**103-215**	±.0007"	8860
39 - 40"	.001"	**103-216**	±.00075"	8880

Inch With friction thimble

Range	Graduation	Order No.	Accuracy	Mass (g)
0 - 1"	.0001"	**103-135***	±.0001"	175
1 - 2"	.0001"	**103-136***	±.0001"	215

* .0001" Reading is obtained with vernier

Inch With ratchet stop

Range	Graduation	Order No.	Accuracy	Mass (g)
0 - 1"	.0001"	**103-131***	±.0001"	175
1 - 2"	.0001"	**103-132***	±.0001"	215
2 - 3"	.0001"	**103-217***	±.0001"	315
3 - 4"	.0001"	**103-218***	±.00015"	375
4 - 5"	.0001"	**103-219***	±.00015"	515
5 - 6"	.0001"	**103-220***	±.00015"	665
6 - 7"	.0001"	**103-221***	±.0002"	720
7 - 8"	.0001"	**103-222***	±.0002"	920
8 - 9"	.0001"	**103-223***	±.0002"	1080
9 - 10"	.0001"	**103-224***	±.00025"	1255
10 - 11"	.0001"	**103-225***	±.00025"	1405
11 - 12"	.0001"	**103-226***	±.00025"	1565

* .0001" Reading is obtained with vernier

Inch With Tapered Frame and Ratchet Stop

Range	Graduation	Order No.	Accuracy	Mass (g)
0-1"	.001"	**103-259**	±.0001"	175
0-1"	.0001"	**103-260***	±.0001"	175
1-2"	.0001"	**103-262***	±.0001"	215

* .0001" Reading is obtained with vernier

Mitutoyo

Outside Micrometers

SERIES 103 — Inch model set

Inch Micrometer Set .001" Graduation Model

Range	Order No.	Included in set	Mass (g)
0 - 3" (3pcs./set)	**103-929**	103-177, 103-178, 103-179, 2 Micrometer Standards	750
0 - 4" (4pcs./set)	**103-930**	103-177, 103-178, 103-179, 103-180, 3 Micrometer Standards	1600
0 - 6" (6pcs./set)	**103-904-10**	103-177, 103-178, 103-179, 103-180, 103-181, 103-182, 5 Micrometer Standards	2200
0 - 12" (12pcs./set)	**103-905-10**	103-177, 103-178, 103-179, 103-180, 103-181, 103-182, 103-183, 103-184, 103-185, 103-186, 103-187, 103-188, 11 Micrometer Standards	9000
6 - 12" (6pcs./set)	**103-906**	103-183, 103-184, 103-185, 103-186, 103-187, 103-188, 6 Micrometer Standards	7695



103-905-10

Inch Micrometer Set .0001" Graduation Model

Range	Order No.	Included in set	Mass (g)
0 - 3" (3pcs./set)	**103-922**	103-135, 103-136, 103-217, 2pcs. Micrometer Standards	705
0 - 4" (4pcs./set)	**103-931**	103-135, 103-136, 103-217, 103-218, 3pcs. Micrometer Standards	1600
0 - 6" (6pcs./set)	**103-907-40**	103-135, 103-136, 103-217, 103-218, 103-219, 103-220, 5 Micrometer Standards	2200
0 - 12" (12pcs./set)	**103-908-40**	103-135, 103-136, 103-217, 103-218, 103-219, 103-220, 103-221, 103-222, 103-223, 103-224, 103-225, 103-226, 11pcs. Micrometer Standards	9000
6 - 12" (6pcs./set)	**103-909**	103-221, 103-222, 103-223, 103-224, 103-225, 103-226, 6pcs. Micrometer Standards	6945



103-904-10

Outside Micrometers

SERIES 340, 104 — with Interchangeable Anvils, Inch model

FEATURES

- IP65 water/dust protection (Series 340*).
  *Models with a range up to12″ / 300mm.
- Wide measuring range with interchangeable anvils.
- With a ratchet stop for constant force.
- Supplied with zero-setting standards bar for each range.
- With SPC output (Series 340).
- Supplied in fitted wooden case.



340-352-30

Technical Data

Accuracy: ±[.00016″ +.00004 (L/3)″] L = Max Range (Inch)
Resolution*: .0001"/0.001mm
(**340-351-30**: .00005"/0.001mm)
Graduation**: .001″ (**104-165**: is .0001″)
Flatness: .000024″ for models up to 12″
.00004″ for models over 12″
Parallelism: .00008″ for models up to 3″
.00012″ for models up to 6″
±[.00008″ + .00004 (L/4)″] L= Max range (inch)
Measuring faces: Carbide tipped (spindle only)
Display*: LCD
Battery*: SR44 (1 pc.), **938882**
Battery life*: Approx. 2.4 years (1.8 years for models over 300mm) years under normal use
Dust/Water protection level*: IP65 (up to 12″ / 300mm)
*Digital models **Analog models

Function of Digital Model

Zero / ABS, Data hold, Preset, Data output,
inch/mm conversion (on inch/metric models only)
Function Lock, 2 Presets
Alarm: Low voltage, Counting value composition error

Optional Accessories for Digital Model

05CZA662: SPC cable with data switch (40″ / 1m)
05CZA663: SPC cable with data switch (80″ / 2m)
959149: SPC cable Straight type (40″/1m)*
959150: SPC cable Straight type (80″/2m)*
04AZB512: SPC cable L-type (40″/1m)*
04AZB513: SPC cable L-type (80″/2m)*
* models over 300mm



SPECIFICATIONS

Inch/Metric Digital model

Range	Resolution	Order No.	Mass (kg)	Remarks
0-6" / 0-152.4mm	.00005" / 0.001mm	**340-351-30**	0.96	with 6 anvils & 5 standards
6-12" / 152.4 - 304.8mm	.0001" / 0.001mm	**340-352-30**	1.88	with 6 anvils & 6 standards
12-18" / 304.8 - 457.2mm	.0001" / 0.001mm	**340-720**	4.75	with 6 anvils & 6 standards
18-24" / 457.2 - 609.6mm	.0001" / 0.001mm	**340-721**	6.62	with 6 anvils & 6 standards
24-30" / 609.6 - 762.0mm	.0001" / 0.001mm	**340-722**	10.06	with 6 anvils & 6 standards
30-36" / 762.0 - 914.4mm	.0001" / 0.001mm	**340-723**	11.98	with 6 anvils & 6 standards

Inch

Range	Graduation	Order No.	Mass(kg)	Remarks
0-2″	.0001″	**104-165***	0.32	with 1″ anvil & 1 standard
0-6″	.001″	**104-137**	1.35	with 6 anvils & 5 standards
6-12″	.001″	**104-138**	2.65	with 6 anvils & 6 standards
12-16″	.001″	**104-152**	3.31	with 4 anvils & 4 standards
12-18″	.001″	**104-201**	4.69	with 6 anvils & 6 standards
16-20″	.001″	**104-153**	4.81	with 4 anvils & 4 standards
18-24″	.001″	**104-202**	6.51	with 6 anvils & 6 standards
20-24″	.001″	**104-154**	6.35	with 4 anvils & 4 standards
24-28″	.001″	**104-155**	7.72	with 4 anvils & 4 standards
24-30″	.001″	**104-203**	9.95	with 6 anvils & 6 standards
28-32″	.001″	**104-156**	9.08	with 4 anvils & 4 standards
30-36″	.001″	**104-204**	11.87	with 6 anvils & 6 standards
32-36″	.001″	**104-157**	10.41	with 4 anvils & 4 standards
36-40″	.001″	**104-158**	11.78	with 4 anvils & 4 standards
36-42″	.001″	**104-205**	13.68	with 6 anvils & 6 standards

*.0001" reading is obtained with vernier.

Outside Micrometers

SERIES 340, 104 — with Interchangeable Anvils, Metric Model

FEATURES

- IP65 water/dust protection (Series 340*).
  *Models with a range up to 300mm.
- Wide measuring range with interchangeable anvils.
- With a ratchet stop for constant force.
- Supplied with zero-setting standards bar for each range.
- With SPC output (Series 340).
- Supplied in fitted wooden case.

Digital model



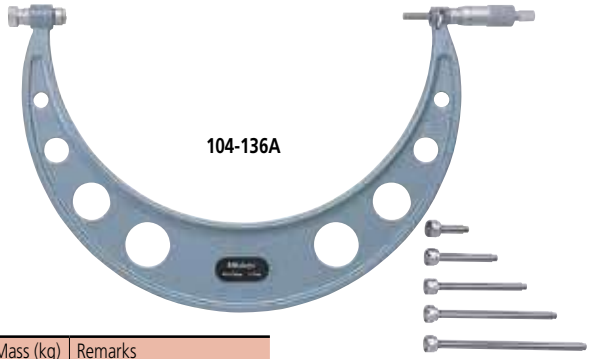

SPECIFICATIONS

Metric Digital model

Range	Resolution	Order No.	Mass (kg)	Remarks
0 - 150mm	0.001mm	**340-251-30**	0.96	with 6 anvils & 5 standards
150 - 300mm	0.001mm	**340-252-30**	1.88	with 6 anvils & 6 standards
300 - 400mm	0.001mm	**340-520**	3.31	with 4 anvils & 4 standards
400 - 500mm	0.001mm	**340-521**	4.81	with 4 anvils & 4 standards
500 - 600mm	0.001mm	**340-522**	6.35	with 4 anvils & 4 standards
600 - 700mm	0.001mm	**340-523**	7.72	with 4 anvils & 4 standards
700 - 800mm	0.001mm	**340-524**	9.08	with 4 anvils & 4 standards
800 - 900mm	0.001mm	**340-525**	10.41	with 4 anvils & 4 standards
900 - 1000mm	0.001mm	**340-526**	11.78	with 4 anvils & 4 standards

Metric

Range	Graduation	Order No.	Mass (kg)	Remarks
0 - 50mm	0.01mm	**104-171***	0.32	with 2 anvils & 1 standard
0 - 100mm	0.01mm	**104-139A**	0.79	with 4 anvils & 3 standards
0 - 150mm	0.01mm	**104-135A**	1.35	with 6 anvils & 5 standards
50 - 150mm	0.01mm	**104-161A**	1.35	with 4 anvils & 4 standards
100 - 200mm	0.01mm	**104-140A**	1.38	with 4 anvils & 4 standards
150 - 300mm	0.01mm	**104-136A**	2.65	with 6 anvils & 6 standards
200 - 300mm	0.01mm	**104-141A**	2.22	with 4 anvils & 4 standards
300 - 400mm	0.01mm	**104-142A**	3.31	with 4 anvils & 4 standards
400 - 500mm	0.01mm	**104-143A**	4.81	with 4 anvils & 4 standards
500 - 600mm	0.01mm	**104-144A**	6.35	with 4 anvils & 4 standards
600 - 700mm	0.01mm	**104-145A**	7.72	with 4 anvils & 4 standards
700 - 800mm	0.01mm	**104-146A**	9.08	with 4 anvils & 4 standards
800 - 900mm	0.01mm	**104-147A**	10.41	with 4 anvils & 4 standards
900 - 1000mm	0.01mm	**104-148A**	11.78	with 4 anvils & 4 standards

*The frame is in a heat-insulated cover.

DIMENSIONS

Unit: mm

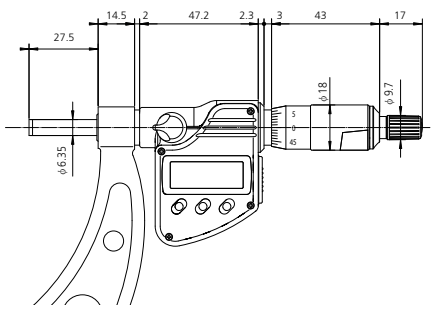

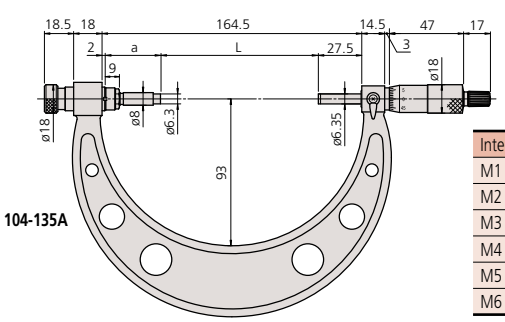

Interchangeable anvil	L	a
M1	0	135
M2	25	110
M3	50	85
M4	75	60
M5	100	35
M6	125	10

Technical Data

Accuracy: ±(4+R/75)µm, R=max. range (mm)
Resolution*: 0.001mm
Graduation**: 0.01mm
Flatness: 0.6µm for models up to 300mm
1µm for models over 300mm
Parallelism: 2µm for models up to 75mm
3µm for models up to 150mm
(2+R/100)µm for models over 150mm, R=max. range (mm)
Measuring faces: Carbide tipped (spindle only)
Display*: LCD
Battery*: SR44 (1 pc.), **938882**
Battery life*: Approx. 2.4 years (1.8 years for models over 300mm) years under normal use
Dust/Water protection level*: IP65 (up to 300mm)
*Digital models **Analog models

Function of Digital Model

Zero / ABS, Data hold, Preset, Data output,
inch/mm conversion (on inch/metric models only)
Function Lock, 2 Presets
Alarm: Low voltage, Counting value composition error

Optional Accessories for Digital Model

05CZA662: SPC cable with data switch (40" / 1m)
05CZA663: SPC cable with data switch (80" / 2m)
959149: SPC cable Straight type (40"/1m)*
959150: SPC cable Straight type (80"/2m)*
04AZB512: SPC cable L-type (40"/1m)*
04AZB513: SPC cable L-type (80"/2m)*
* models over 300mm

Outside Micrometers

SERIES 105 — with Extension Anvil Collars

Technical Data

Accuracy: ±(6+R/75)µm, R=max. range (mm)
Graduation: .001" / 0.01mm
Flatness: .000052" / 1.3µm
Parallelism: [.00016"+.00004 (L/4)"] L=max. range (inch)
(2+R/100)µm, R=max. range (mm)
Measuring faces: Carbide tipped

Extension anvil collar







FEATURES

- Wide measuring range with extension anvil collars.
- 50mm spindle stroke.
- With ratchet stop for constant force.
- Supplied with zero-setting standards bar for each range.
- Square and round pipes are combined for light weight and rigid frame (for models over 1000mm range).
- Workpiece stopper (for models over 1000mm range).
- Supplied in a fitted wooden case.

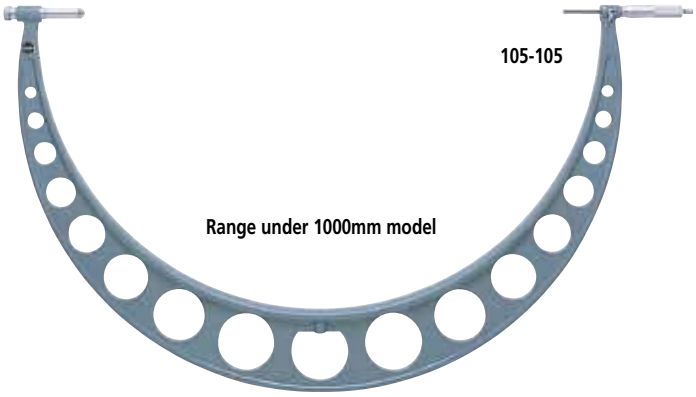

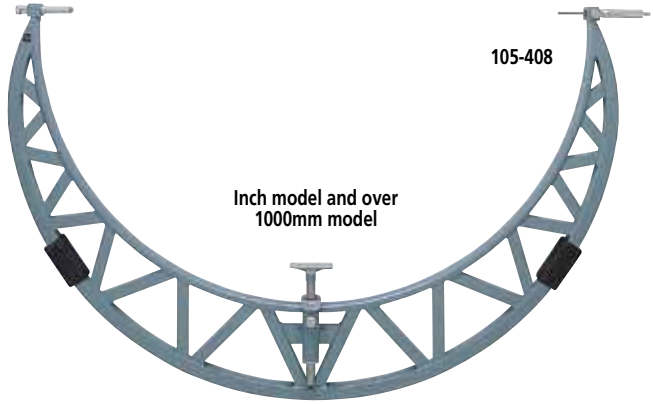

SPECIFICATIONS

Metric

Range	Order No.	Extension collars	Mass (kg)
500 - 600mm	**105-103**	50mm	5.53
600 - 700mm	**105-104**	50mm	6.35
700 - 800mm	**105-105**	50mm	7.17
800 - 900mm	**105-106**	50mm	7.99
900 - 1000mm	**105-107**	50mm	8.81
1000 - 1100mm	**105-408**	50mm	6.37
1100 - 1200mm	**105-409**	50mm	7.08
1000 - 1200mm	**105-418**	50mm, 100mm	13.77
1200 - 1300mm	**105-410**	50mm	7.79
1300 - 1400mm	**105-411**	50mm	8.50
1200 - 1400mm	**105-419**	50mm, 100mm	15.77
1400 - 1500mm	**105-412**	50mm	9.21
1500 - 1600mm	**105-413**	50mm	10.17
1400 - 1600mm	**105-420**	50mm, 100mm	17.91
1600 - 1700mm	**105-414**	50mm	11.13
1700 - 1800mm	**105-415**	50mm	12.09
1600 - 1800mm	**105-421**	50mm, 100mm	20.80
1800 - 1900mm	**105-416**	50mm	13.05
1900 - 2000mm	**105-417**	50mm	14.01
1800 - 2000mm	**105-422**	50mm, 100mm	22.76

Inch

Range	Order No.	Extension collars	Mass (kg)
40 - 44"	**105-428**	2"	10.0
44 - 48"	**105-429**	2"	10.9
48 - 52"	**105-430**	2"	11.4
52 - 56"	**105-431**	2"	11.9
56 - 60"	**105-432**	2"	12.6
60 - 64"	**105-433**	2"	13.2
64 - 68"	**105-434**	2"	14.1
68 - 72"	**105-435**	2"	14.9
72 - 76"	**105-436**	2"	15.8
76 - 80"	**105-437**	2"	16.7

Mitutoyo

Outside Micrometers

SERIES 406 — Non-Rotating Spindle Type

FEATURES

- With a standard bar except for 0 -1" / 0 - 25mm model.
- With SPC output.
- Supplied in a fitted plastic case.
- Non-slip grip finish



SPECIFICATIONS

Metric Digital model with ratchet stop

Range	Resolution	Order No.	Accuracy
0 - 25mm	0.001mm	**406-250-30**	±3µm
25 - 50mm	0.001mm	**406-251-30**	±3µm
50 - 75mm	0.001mm	**406-252-30**	±3µm
75 - 100mm	0.001mm	**406-253-30**	±4µm

Inch/Metric Digital model with ratchet stop

Range	Resolution	Order No.	Accuracy
0 - 1"/0 - 25.4mm	.00005"/0.001mm	**406-350-30**	±.00015"
1 - 2"/25.4 - 50.8mm	.00005"/0.001mm	**406-351-30**	±.00015"
2 - 3"/50.8 - 72.6mm	.00005"/0.001mm	**406-352-30**	±.00015"
3 - 4"/76.2 - 101.6mm	.00005"/0.001mm	**406-353-30**	±.0002"

DIMENSIONS AND MASS

Digital models (up to 75mm)

Unit: mm

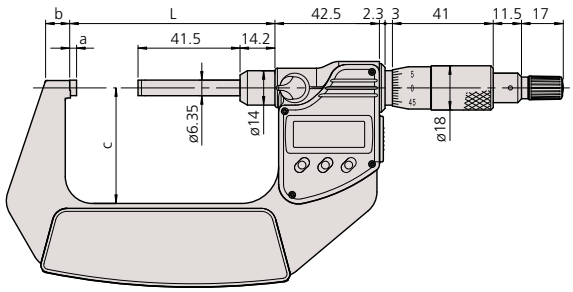

Digital models (over 75mm)

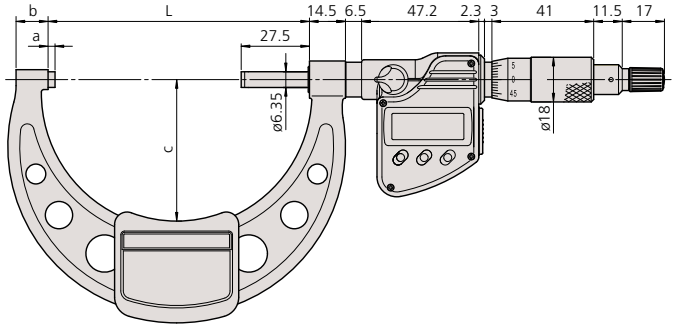

Technical Data

Accuracy: Refer to the list of specifications
Resolution: .00005"/0.001mm or 0.001mm
Flatness: 0.3µm / .000012"
Parallelism: .00012"/3µm for models up to 3"/75mm
.00016"/4µm for 4"/100mm models
Measuring faces: Carbide tipped
Display: LCD
Battery: SR44 (1 pc.), **938882**
Battery life: Approx. 2.4 years under normal use

Function of Digital Model

Origin-set, Zero / ABS, Data hold, Data output, inch/mm conversion (on inch/metric models only)
Function lock
Alarm: Low voltage, Counting value composition error

Optional Accessories for Digital Model

05CZA662: SPC cable with data switch (40" / 1m)
05CZA663: SPC cable with data switch (80" / 2m)

Outside Micrometers

SERIES 107

Technical Data

Graduation: 0.01mm (thimble)
Flatness: 0.6µm
Parallelism: (2+R/100)µm, R=max. range (mm)
Measuring faces: Carbide tipped



FEATURES

- Uses dial indicator for direct go/no-go judgment for mass-produced parts.
- Anvil retracting trigger for quick measurement.
- With a standard bar except for 0 - 25mm models.
- Supplied in fitted plastic case.

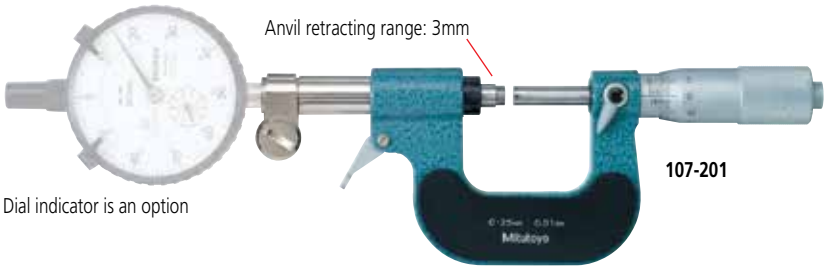

SPECIFICATIONS

Metric

Range	Graduation	Order No.	Accuracy
0 - 25mm	0.01mm	**107-201**	±2µm
25 - 50mm	0.01mm	**107-202**	±2µm
50 - 75mm	0.01mm	**107-203**	±2µm
75 - 100mm	0.01mm	**107-204**	±3µm
100 - 125mm	0.01mm	**107-205**	±3µm
125 - 150mm	0.01mm	**107-206**	±3µm
150 - 175mm	0.01mm	**107-207**	±4µm
175 - 200mm	0.01mm	**107-208**	±4µm

DIMENSIONS AND MASS

Unit: mm

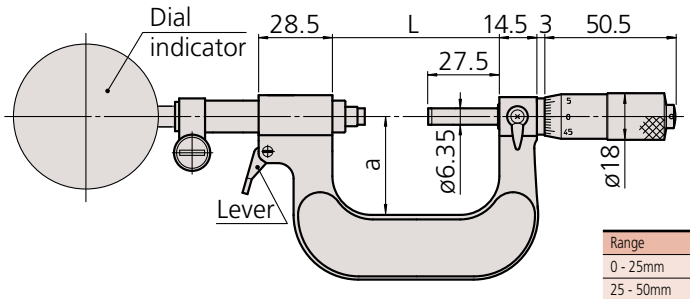

Range	L	a	MASS (g)
0 - 25mm	39.5	30	480
25 - 50mm	64.5	38	520
50 - 75mm	90	45	585
75 - 100mm	115.6	65	630
100 - 125mm	140.6	79	725
125 - 150mm	165.6	93	810
150 - 175mm	190.5	105	1050
175 - 200mm	215.5	120	1170

Spline Micrometers

SERIES 331, 111

FEATURES

- IP65 water/dust protection (Series 331).
- The anvil and spindle have a small diameter for measuring splined shafts, slots, and keyways.
- Non-slip grip finish (digital models)
- With ratchet stop for constant force.
- With SPC output (Series 331).
- With a standard bar except 0-1" and 0-25mm model.
- Supplied in fitted plastic case.



331-351-30



111-115

SPECIFICATIONS

Metric Digital model

Range	Resolution	Order No.	Accuracy	Remarks	Mass (g)
0 - 25mm	0.001mm	**331-251-30**	±2µm	Type A	330
		331-261-30	±2µm	Type B	330
25 - 50mm	0.001mm	**331-252-30**	±2µm	Type A	470
		331-262-30	±2µm	Type B	470
50 - 75mm	0.001mm	**331-253-30**	±2µm	Type A	625
		331-263-30	±2µm	Type B	625
75 - 100mm	0.001mm	**331-254-30**	±3µm	Type A	565
		331-264-30	±3µm	Type B	565

Metric

Range	Graduation	Order No.	Accuracy	Remarks	Mass (g)
0 - 25mm	0.01mm	**111-115**	±3µm	Type A	205
		111-215	±3µm	Type B	205
25 - 50mm	0.01mm	**111-116**	±3µm	Type A	305
50 - 75mm	0.01mm	**111-117**	±3µm	Type A	370
75 - 100mm	0.01mm	**111-118**	±4µm	Type A	500
100 - 125mm	0.01mm	**111-119**	±4µm	Type A	655
125 - 150mm	0.01mm	**111-120**	±4µm	Type A	710
150 - 175mm	0.01mm	**111-121**	±5µm	Type A	900
175 - 200mm	0.01mm	**111-122**	±5µm	Type A	1040

Inch/Metric Digital model

Range	Resolution	Order No.	Accuracy	Remarks	Mass (g)
0 - 1"/ 0 - 25.4mm	.00005" / 0.001mm	**331-351-30**	±.0001"	Type A	330
		331-361-30	±.0001"	Type B	330
1 - 2"/ 25.4-50.8mm	.00005" / 0.001mm	**331-352-30**	±.0001"	Type A	470
		331-362-30	±.0001"	Type B	470
2 - 3" / 50.8-76.2mm	.00005" / 0.001mm	**331-353-30**	±.0001"	Type A	625
		331-363-30	±.0001"	Type B	625
3 - 4" / 76.2-101.6mm	.00005" / 0.001mm	**331-354-30**	±.00015"	Type A	565
		331-364-30	±.00015"	Type B	565

Inch

Range	Graduation	Order No.	Accuracy	Remarks	Mass (g)
0 - 1"	.0001"	**111-166***	±.00015"	Type A	205

* .0001" reading is obtained with vernier.

Technical Data

Accuracy: Refer to the list of specifications
Resolution*: .00005"/0.001mm or 0.001mm
Graduation**: .0001" or 0.01mm, .001"
Flatness: .000012" / 0.3µm
Parallelism: (2+R/100)µm, R=max. range (mm) [.00008" + .00004" (L/4")]
L = max. range (inch)
Measuring faces: Carbide tipped
Display*: LCD
Battery*: SR44 (1 pc.), **938882**
Battery life*: Approx. 2.4 years under normal use
Dust/Water protection level*: IP65
*Digital models **Analog models

Function of Digital Model

Origin-set, Zero-setting, Data hold, Data output, inch/mm conversion (on inch/metric models only)
Function lock
Alarm: Low voltage, Counting value composition error

Optional Accessories for Digital Model

05CZA662: SPC cable with data switch (40" / 1m)
05CZA663: SPC cable with data switch (80"/ 2m)



Unit: mm

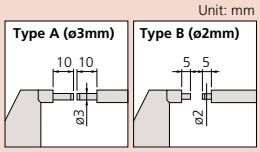

DIMENSIONS

Unit: mm

Models up to 75mm

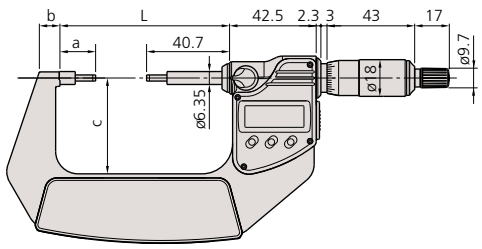

Digital model

Models over 75mm

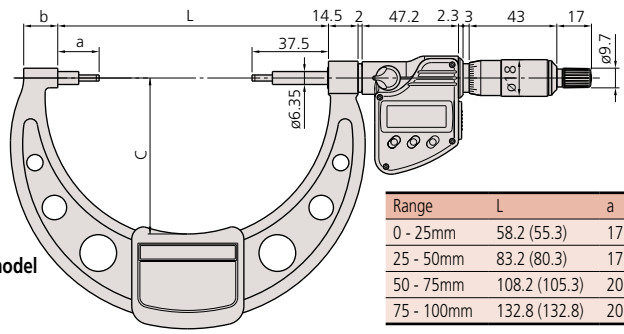

Digital model

Range	L	a	b	c
0 - 25mm	58.2 (55.3)	17.5 (17.8)	7.3 (10)	32 (38)
25 - 50mm	83.2 (80.3)	17.5 (17.8)	10.1 (12)	47 (49)
50 - 75mm	108.2 (105.3)	20.3 (17.8)	11.5 (14)	60 (60)
75 - 100mm	132.8 (132.8)	20.3 (20.3)	16.7 (17)	76.5 (79)

Point Micrometers

SERIES 342, 142, 112

Technical Data

Accuracy: Refer to the list of specifications.
Resolution*: .00005"/0.001mm or 0.001mm
Graduation**: .001" or 0.01mm
Display*: LCD
Battery*: SR44 (1 pc.), **938882**
Battery life*: Approx. 2.4 years under normal use
Dust/Water protection level*: IP65
*Digital models **Analog models

Function of Digital Model

Origin-set, Zero / ABS, Data hold,
inch/mm conversion (on inch/metric models only)
Function lock
Alarm: Low voltage, Counting value composition error

Optional Accessories for Digital Model

05CZA662: SPC cable with data switch (40" / 1m)
05CZA663: SPC cable with data switch (80" / 2m)

FEATURES

- IP65 water/dust protection (Series 342).
- Pointed spindle and anvil for measuring the web thickness of drills, small grooves, keyways, and other hard-to-reach dimensions.
- 15 degree and 30 degree measuring points are available.
- Non-slip grip finish (digital models).
- The measuring points have approximately 0.3mm / .012" radius.
- With ratchet stop for constant force.
- With SPC output (Series 342).
- With digit counter (Series 142).
- With a standard bar except 0 - 1" and 0 - 25mm model.
- Supplied in fitted plastic case.



342-351-30



112-201



Tip angle: 15° (R0.3mm)



Tip angle: 30° (R0.3mm)



SPECIFICATIONS

Metric Digital model (with carbide tip)

Range	Resolution	Order No.	Accuracy	Point	Mass (g)
0 - 25mm	0.001mm	**342-251-30**	±2µm	15°	330
		342-261-30	±2µm	30°	330
25 - 50mm	0.001mm	**342-252-30**	±2µm	15°	470
		342-262-30	±2µm	30°	470
50 - 75mm	0.001mm	**342-253-30**	±2µm	15°	625
		342-263-30	±2µm	30°	625
75 - 100mm	0.001mm	**342-254-30**	±3µm	15°	565
		342-264-30	±3µm	30°	565

Inch/Metric Digital model (with carbide tip)

Range	Resolution	Order No.	Accuracy	Point	Mass (g)
0 - 1"/ 0 -25.4mm	.00005" / 0.001mm	**342-351-30**	±.0001"	15°	330
		342-361-30	±.0001"	30°	330
1" - 2" / 25.4 - 50.8mm	.00005" / 0.001mm	**342-352-30**	±.0001"	15°	470
		342-362-30	±.0001"	30°	470
2" - 3" / 50.8 - 76.2mm	.00005" / 0.001mm	**342-353-30**	±.0001"	15°	625
		342-363-30	±.0001"	30°	625
3" - 4" / 76.2 - 101.6mm	.00005" / 0.001mm	**342-354-30**	±.00015"	15°	565
		342-364-30	±.00015"	30°	565

Metric Mechanical Counter Model

Range	Graduation	Order No.	Accuracy	Point	Mass (g)
0 - 25mm	0.01mm	**142-153***	±3µm	15°	260
		142-201*	±3µm	30°	260

*The points don't have carbide tips.

Inch Mechanical Counter Model

Range	Graduation	Order No.	Accuracy	Point	Mass (g)
0 - 1"	.001"	**142-177***	±.00015"	15°	260
		142-225*	±.00015"	30°	260

*The points don't have carbide tips.

Metric

Range	Graduation	Order No.	Accuracy	Point	Mass (g)
0 - 25mm	0.01mm	**112-165**	±3µm	15°	205
		112-153*	±3µm	15°	205
		112-213	±3µm	30°	205
		112-201*	±3µm	30°	205
25 - 50mm	0.01mm	**112-166**	±3µm	15°	305
		112-154*	±3µm	15°	305
		112-214	±3µm	30°	305
		112-202*	±3µm	30°	305
50 - 75mm	0.01mm	**112-167**	±3µm	15°	370
		112-155*	±3µm	15°	370
		112-215	±3µm	30°	370
		112-203*	±3µm	30°	370
75 - 100mm	0.01mm	**112-168**	±4µm	15°	500
		112-156*	±4µm	15°	500
		112-216	±4µm	30°	500
		112-204*	±4µm	30°	500

*The points don't have carbide tips.

Inch

Range	Graduation	Order No.	Accuracy	Point	Mass (g)
0 - 1"	.001"	**112-189**	±.00015"	15°	205
		112-177*	±.00015"	15°	205
		112-237	±.00015"	30°	205
		112-225*	±.00015"	30°	205
1 - 2"	.001"	**112-190**	±.00015"	15°	305
		112-178*	±.00015"	15°	305
		112-238	±.00015"	30°	305
		112-226*	±.00015"	30°	305
2 - 3"	.001"	**112-191**	±.00015"	15°	370

*The points don't have carbide tips.

DIMENSIONS

Models up to 75mm

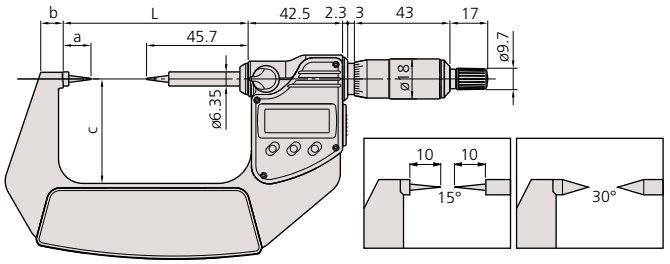

Digital model

Range	L	a	b	c	d
0 - 1" / 0 - 25mm	58.2 (55.3)	12.5 (12.8)	7.3 (10)	32 (38)	6.35
1 - 2" / 25 - 50mm	83.2 (80.3)	12.5 (12.8)	10.1 (12)	47 (49)	6.35
2 - 3" / 50 - 75mm	108.2 (105.3)	12.5 (15.3)	11.5 (14)	60 (60)	6.35
3 - 4" / 75 -100mm	132.8 (132.8)	15.3 (15.3)	16.7 (17)	76.5 (79)	6.35

( ): Analog model

Models over 75mm

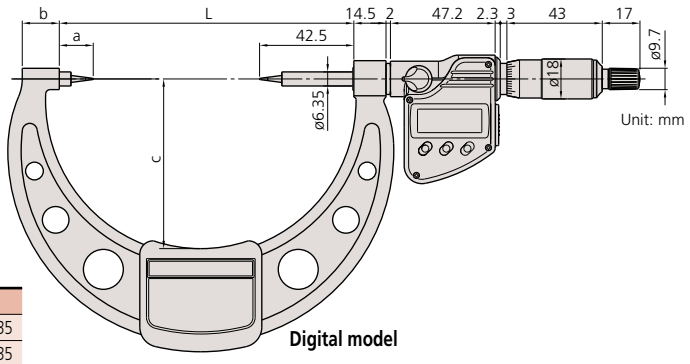

Unit: mm

Digital model

Crimp Height Micrometers

SERIES 342, 142, 112 — Point Spindle and Blade Anvil

TÜVRheinland CERTIFIED
www.tuv.com
ID 0000040191

IP65

SPC

FEATURES

- IP54/65 water/dust protection (Series 342).
- Measures the height of crimp contacts.
- With ratchet stop for constant force.
- Non-slip grip finish (digital models)
- With SPC output (Series 342).
- With digit counter (Series 142).
- Supplied in fitted plastic case.



342-371-30

112-401

Quickmike type



342-451



Technical Data

Accuracy: Refer to the list of specifications
Resolution*: .00005" / 0.001mm or 0.001mm
Graduation**: 0.01mm
Display*: LCD
Battery*: SR44 (1 pc.), **938882**
Battery life*: Approx. 2.4 years under normal use (3 years: Quickmike type)
Dust/Water protection level*: IP65 / IP54
*Digital models **Analog models

Function of Digital Model

Origin-set, Zero / ABS (342-271 342-371), Data hold, Data output,
inch/mm conversion (on inch/metric models only)
Function lock
Alarm: Low voltage, Counting value composition error

Optional Accessories for Digital Model

05CZA662: SPC cable with data switch (40" / 1m)
05CZA663: SPC cable with data switch (80" / 2m)
937387: SPC cable for Quickmike type (40"/ 1m)
965013: SPC cable for Quickmike type (80" / 2m)

SPECIFICATIONS

Metric Digital model

Range	Resolution	Order No.	Accuracy	Mass (g)
0 - 20mm	0.001mm	**342-271-30**	±3µm	270

Metric Quickmike type

Range	Resolution	Order No.	Accuracy	Mass (g)
0 - 15mm	0.001mm	**342-451**	±3µm	275

Metric Mechanical counter model

Range	Graduation	Order No.	Accuracy	Mass (g)
0 - 25mm	0.01mm	**142-402**	±3µm	200
0 - 25mm	0.001mm	**142-403***	±3µm	200

* 0.001mm reading is obtained with vernier.

Inch/Metric Digital model

Range	Resolution	Order No.	Accuracy	Mass (g)
0 - 0.8" / 0 - 20mm	.00005" / 0.001mm	**342-371-30**	±.00015"	270

Metric

Range	Graduation	Order No.	Accuracy	Mass (g)
0 - 25mm	0.01mm	**112-401**	±3µm	165

Unit: mm

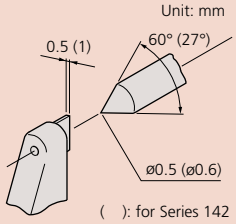

( ): for Series 142

V-Anvil Micrometers

SERIES 314, 114 — 3 Flutes and 5 Flutes

FEATURES

- Measures the outside diameter of cutting tools (such as taps, reamers, end mills) with an odd number of flutes.
- With ratchet stop for constant force.
- Supplied with setting standard.
- Non-slip grip finish (digital models).
- V-anvils with a centerline groove are available. They are useful for measuring pitch diameters of taps which have a small diameter by using single-wire method.
- With SPC output (Series 314).
- Supplied in fitted plastic case.

Technical Data

Accuracy: Refer to the list of specifications
Resolution*: .00005" / 0.001mm or 0.001mm
Graduation**: .001" or .0001", 0.01mm
Flatness (spindle/anvil):
Analog model: .000024" / 0.6µm, .00005" / 1.3µm
Digital Model: .000012" / 0.3µm, .00004" / 1µm
Spindle face: Carbide tipped
Display*: LCD
Battery*: SR44 (1 pc.), **938882**
Battery life*: Approx. 2.4 years under normal use
*Digital models **Analog models

Function of Digital Model

Zero / ABS, Data hold, Data output, Preset,
inch/mm conversion (on inch/metric models only)
Function lock, 2 Presets
Alarm: Low voltage, Counting value composition error

Optional Accessories for Digital Model

05CZA662: SPC cable with data switch (40" / 1m)
05CZA663: SPC cable with data switch (80" / 2m)



314-351-30



114-121



114-202



114-204

Pitch Diameter Measurement of Tap by Single-wire Method Inch/Metric

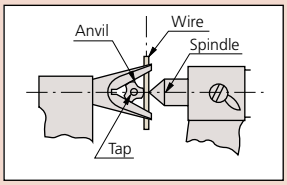

SPECIFICATIONS

Metric Digital model for 3 flutes cutting head

Range	Resolution	Order No.	Accuracy	Remarks	Setting Standard	Mass (g)
1 - 15mm	0.001mm	**314-251-30**	±4µm	w/Groove	ø5mm	275
		314-261-30	±4µm	—	ø5mm	275
10 - 25mm	0.001mm	**314-252-30**	±4µm	w/Groove	ø10mm	410
		314-262-30	±4µm	—	ø10mm	410
25 - 40mm	0.001mm	**314-253-30**	±5µm	—	ø25mm	465

Inch/Metric Digital model for 3 flutes cutting head

Range	Resolution	Order No.	Accuracy	Remarks	Setting Standard	Mass (g)
.05 - .6"/ 1.27 - 15.24mm	.00005" / 0.001mm	**314-351-30**	±.0002"	w/Groove	ø.2"	275
		314-361-30	±.0002"	—	ø.2"	275
.4" - 1"/ 10.16 - 25.4mm	.00005" / 0.001mm	**314-352-30**	±.0002"	w/Groove	ø.4"	410
		314-362-30	±.0002"	—	ø.4"	410
1" - 1.6"/ 25.4 - 40.64mm	.00005" / 0.001mm	**314-353-30**	±.00025"	—	ø 1"	465

SPECIFICATIONS

Metric For 3 flutes cutting head

Range	Graduation	Order No.	Accuracy	Setting Standard	Remarks	Mass (g)
1 - 15mm	0.01mm	**114-101**	±4µm	ø5mm	w/Groove	120
		114-161	±4µm	ø5mm	—	120
10 - 25mm	0.01mm	**114-102**	±4µm	ø10mm	w/Groove	280
		114-162	±4µm	ø10mm	—	280
2.3 - 25mm	0.01mm	**114-204***	±4µm	ø5mm	—	290
25 - 40mm	0.01mm	**114-103**	±5µm	ø25mm	—	400
40 - 55mm	0.01mm	**114-104**	±6µm	ø40mm	—	465
55 - 70mm	0.01mm	**114-105**	±6µm	ø55mm	—	675
70 - 85mm	0.01mm	**114-106**	±7µm	ø70mm	—	910

*Carbide-tipped anvil

Inch For 3 flutes cutting head

Range	Graduation	Order No.	Accuracy	Setting Standard	Mass (g)
.05 - .6"	.001"	**114-163**	±.0002"	ø.2"	120
.09 - 1"	.0001"	**114-202***	±.0002"	ø.2"	280
1 - 1.6"	.001"	**114-113**	±.00025"	ø1"	400
1.6 - 2.2"	.001"	**114-114**	±.0003"	ø1.6"	465

*Carbide-tipped anvil and .0001" reading is obtained with vernier.

Metric For 5 flutes cutting head

Range	Graduation	Order No.	Accuracy	Setting Standard	Remarks	Mass (g)
5 - 25mm	0.01mm	**114-121**	±4µm	ø5mm	w/Groove	255
		114-165	±4µm	ø5mm	—	255
2.3 - 25mm	0.01mm	**114-137***	±4µm	ø5mm	—	220
25 - 45mm	0.01mm	**114-122**	±5µm	ø25mm	—	400
45 - 65mm	0.01mm	**114-123**	±6µm	ø55mm	—	540
65 - 85mm	0.01mm	**114-124**	±7µm	ø70mm	—	760

*Carbide-tipped anvil

Inch For 5 flutes cutting head

Range	Graduation	Order No.	Accuracy	Setting Standard	Mass (g)
.09 - 1"	.0001"	**114-135**	±.0002"	ø.2"	255

DIMENSIONS

Unit: mm

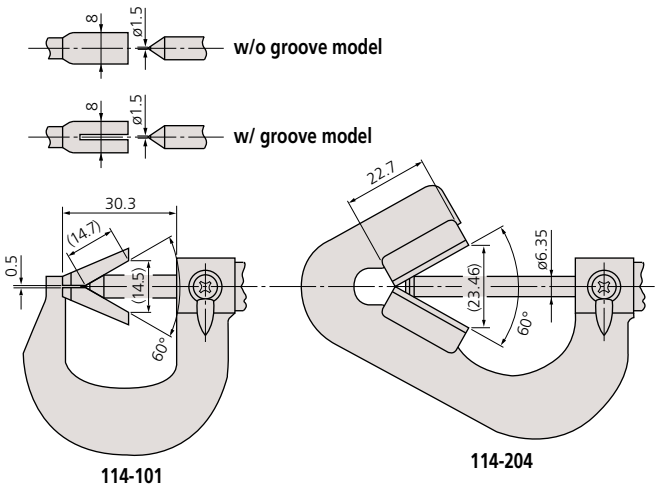

Range	a
.05 - .6" / 10 - 25mm	6.2
1 - 1.6" / 25 - 40mm	19.14
1.6 - 2.2" / 40 - 55mm	32.13
55 - 70mm	45.12
70 - 85mm	58.11

Limit Micrometers

SERIES 113

FEATURES

- Can be used as a go/no-go gage by setting the upper and lower limits.
- Provided with a standard bar for 25mm - 50mm model.
- Supplied in fitted plastic case.





113-102

Technical Data

Graduation: 0.01mm
Flatness: 0.6µm
Parallelism: (3+R/100)µm, R=max. range (mm)
Measuring faces: Carbide tipped

SPECIFICATIONS

Metric

Range	Graduation	**Order No.**	Accuracy
0 - 25mm	0.01mm	**113-102**	±3µm
25 - 50mm	0.01mm	**113-103**	±3µm

DIMENSIONS AND MASS

Unit: mm

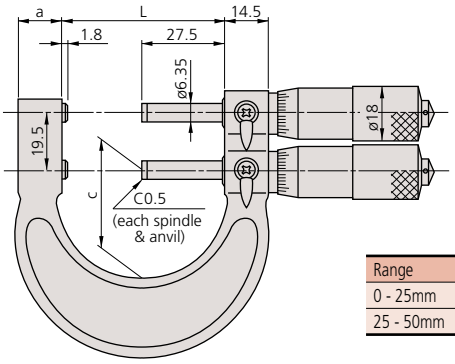

Range	L	a	c	Mass (G)
0 - 25mm	29.3	15	23	340
25 - 50mm	54.3	15	37	380

Mitutoyo

Pana Micrometers

SERIES 116 — Interchangeable Anvil Type

FEATURES

- Non-rotating spindle with optional seven interchangeable anvils (flat, spline, spherical, point, knife-edge, disk and blade) for a wide range of applications.
- Interchangeable anvils (pair) are optional.
- With a standard bar except 0-1″ and 0 - 25 mm model.
- V-anvils and conical spindle tips (matching pair) for screw thread measurement are also available.
- With ratchet stop for constant force.





116-101



116-105

Shown with optional anvils

SPECIFICATIONS

Metric

Range	Graduation	Order No.	Accuracy
0 - 25mm	0.01mm	**116-101**	±4µm
25 - 50mm	0.01mm	**116-102**	±4µm

Inch

Range	Graduation	Order No.	Accuracy
0 - 1"	.001"	**116-105**	±.0002"
1" - 2"	.001"	**116-106**	±.0002"

Technical Data

Graduation: .001″ or 0.01mm
Spindle feed error: .00012″ / 3µm

Optional Accessories

Interchangeable V-anvil and conical spindle tip set:
For Metric/Unified screw

Order No.	Assortment of anvils and tips
116-830	0.4 - 0.5mm/64 - 48TPI (**116-831**) 0.6 - 0.9mm/44 - 28TPI (**116-832**) 1 - 1.75mm/24 - 14TPI (**116-833**) 2 - 3mm/13 - 9TPI (**116-834**) 3.5 - 5mm/8 - 5TPI (**116-835**) 5.5 - 7mm/4.5 - 3.5TPI (**116-836**)

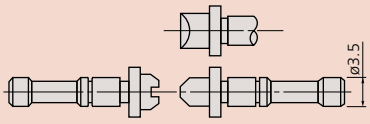

116-830

Interchangeable anvils set

Order No.	Assortment of anvils
116-800	Flat anvils (**116-801**) Spline anvils (**116-802**) Spherical anvils (**116-803**) Point anvils (**116-804**) Knife-edge anvils (**116-805**) Disk anvils (**116-806**) Blade anvils (**116-807**)

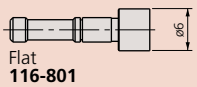

Flat
116-801

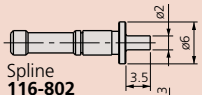

Spline
116-802

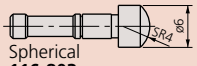

Spherical
116-803

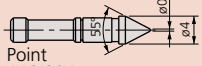

Point
116-804

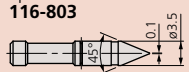

Knife-edge
116-805

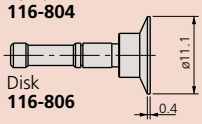

Disk
116-806

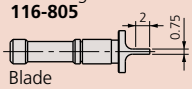

Blade
116-807

Spherical Face Micrometers

SERIES 395, 295, 115

FEATURES

- IP65 water/dust protection (Series 395).
- Designed to measure the wall thickness of various tubing.
- With ratchet stop for constant force.
- With SPC output (Series 395).
- Non-slip grip finish (digital models).
- With digit counter (Series 295).
- With a standard bar except 0 -1" and 0 - 25mm model.
- Supplied in fitted plastic case.



115-153



395-371-30

Technical Data

Accuracy: Refer to the list of specifications
Flatness: .000024" / 0.6µm
Display*: LCD
Battery*: SR44 (1 pc.), **938882**
Battery life*: Approx. 2.4 years under normal use
Dust/Water protection level*: IP65
*Digital models **Analog models

Function of Digital Model

Origin-set, Zero / ABS, Data hold, Data output, inch/mm conversion (on inch/metric models only)
Function lock
Alarm: Low voltage, Counting value composition error

Optional Accessories for Digital Model

05CZA662: SPC cable with data switch (40" / 1m)
05CZA663: SPC cable with data switch (80" / 2m)

Spherical anvil-spindle type



Unit: mm

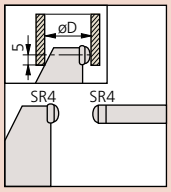

Measuring faces: Carbide tipped

ød: Mini. inside dia. of tubing

SPECIFICATIONS

Metric Digital model with spherical anvil

Range	Resolution	Order No.	Accuracy	Remarks	Mass (g)
0 - 25mm	0.001mm	**395-251-30**S-F	±2µm	D: 15mm	270
		395-271-30S-S	±2µm	D: 15mm	270
25 - 50mm	0.001mm	**395-252-30**S-F	±2µm	D: 15mm	330
		395-272-30S-S	±2µm	D: 15mm	330
50 - 75mm	0.001mm	**395-253-30**S-F	±2µm	D: 19mm	470
		395-273-30S-S	±2µm	D: 19mm	470
75 - 100mm	0.001mm	**395-254-30**S-F	±3µm	D: 20mm	625
		395-274-30S-S	±3µm	D: 20mm	625

S-F: Spherical anvil and flat spindle
S-S: Spherical anvil and spherical spindle

Inch/Metric Digital model with spherical anvil

Range	Resolution	Order No.	Accuracy	Remarks	Mass (g)
0 - 1"/ 0 - 25.4mm	.00005" / 0.001mm	**395-351-30**S-F	±.0001"	D: .59"	270
		395-371-30S-S	±.0001"	D: .59"	270
1" - 2"/ 25.4- 50.8mm	.00005" / 0.001mm	**395-352-30**S-F	±.0001"	D: .59"	330
		395-372-30S-S	±.0001"	D: .59	330
2" - 3"/ 50.8-76.2mm	.00005" / 0.001mm	**395-353-30**S-F	±.0001"	D: .75"	470
		395-373-30S-S	±.0001"	D: .75"	470
3" - 4"/ 76.2-101.6mm	.00005" / 0.001mm	**395-354-30**S-F	±.00015"	D: .79"	625
		395-374-30S-S	±.00015"	D: .79"	625

S-F: Spherical anvil and flat spindle
S-S: Spherical anvil and spherical spindle

Metric Mechanical counter model with spherical anvil

Range	Graduation	Order No.	Accuracy	Remarks	Mass (g)
0 - 25mm	0.01mm	**295-115**S-F	±3µm	D: 10mm	220
		295-215S-S	±3µm	D: 10mm	220

S-F: Spherical anvil and flat spindle
S-S: Spherical anvil and spherical spindle

Inch Mechanical counter model with spherical anvil

Range	Graduation	Order No.	Accuracy	Remarks	Mass (g)
0 - 1"	.0001"	**295-153**S-F*	±.00015"	D: .40"	220
		295-253S-S*	±.00015"	D: .40"	220

S-F: Spherical anvil and flat spindle
S-S: Spherical anvil and spherical spindle
*.0001" reading is obtained with vernier.

Metric With spherical anvil

Range	Graduation	Order No.	Accuracy	Remarks	Mass (g)
0 - 25mm	0.01mm	**115-115**S-F	±3µm	D: 10mm	180
		115-215S-S	±3µm	D: 10mm	180
25 - 50mm	0.01mm	**115-116**S-F	±3µm	D: 11mm	240
		115-216S-S	±3µm	D: 11mm	240
50 - 75mm	0.01mm	**115-117**S-F	±3µm	D: 17mm	315
		115-217S-S	±3µm	D: 17mm	315
75 - 100mm	0.01mm	**115-118**S-F	±4µm	D: 18mm	375
		115-218S-S	±4µm	D: 18mm	375

S-F: Spherical anvil and flat spindle
S-S: Spherical anvil and spherical spindle

Inch With spherical anvil

Range	Graduation	Order No.	Accuracy	Remarks	Mass (g)
0 - 1"	.0001"	**115-153**S-F*	±.00015"	D: .40"	180
0 - 1"	.0001"	**115-253**S-S*	±.00015"	D: .40"	180
1 - 2"	.001"	**115-242**S-S	±.00015"	D: .44"	240
2 - 3"	.001"	**115-243**S-S	±.00015"	D: .67"	315

S-F: Spherical anvil and flat spindle
S-S: Spherical anvil and spherical spindle
*.0001" reading is obtained with vernier.

Tube Micrometers

SERIES 395, 295, 115— Spherical and Cylindrical Anvils

FEATURES

- IP65 water/dust protection (Series 395).
- Designed to measure the wall thickness of various tubing.
- The Tube Micrometers have two combinations of measuring faces (carbide-tipped): spherical-flat type.
- With ratchet stop for constant force.
- With SPC output (Series 395).
- With digit counter (Series 295).
- With a standard bar except 0 -1" and 0 - 25mm model.
- Supplied in fitted plastic case.
- Non-slip grip finish (digital models).

Pin Anvil Type



395-261-30

Technical Data

Accuracy: Refer to the list of specifications.
Flatness: .000024" / 0.6µm
Display*: LCD
Battery*: SR44 (1 pc.), **938882**
Battery life*: Approx. 2.4 years under normal use
Dust/Water protection level*: IP65
*Digital models

Function of Digital Model

Origin-set, Zero / ABS, Data hold, Data output, inch/mm conversion (on inch/metric models only)
Function lock
Alarm: Low voltage, Counting value composition error

Optional Accessories for Digital Model

05CZA662: SPC cable with data switch (40" / 1m)
05CZA663: SPC cable with data switch (80" / 2m)


Type A


Type B


Type C


Type D

SPECIFICATIONS

Metric Digital model with cylindrical anvil

Range	Resolution	Order No.	Accuracy	Remarks	Mass (g)
0 - 25mm	0.001mm	**395-261-30**	±3µm	Type A	270
		395-262-30	±3µm	Type B	270
		395-263-30	±3µm	Type C	310
		395-264-30	±3µm	Type D	310

Inch/Metric Digital model with cylindrical anvil

Range	Resolution	Order No.	Accuracy	Remarks	Mass (g)
0 - 1" / 0 - 25.4mm	.00005" / 0.001mm	**395-362-30**	±.00015"	Type B	270
		395-363-30	±.00015"	Type C	310
		395-364-30	±.00015"	Type D	310

Metric Mechanical counter model

Range	Graduation	Order No.	Accuracy	Remarks	Mass (g)
0 - 25mm	0.01mm	**295-302**	±3µm	Type A	210

Inch Mechanical counter model

Range	Graduation	Order No.	Accuracy	Remarks	Mass (g)
0 - 1"	.0001"	**295-313**	±.00015"	Type C	210
		295-314	±.00015"	Type D	210

Metric With cylindrical anvil

Range	Graduation	Order No.	Accuracy	Remarks	Mass (g)
0 - 25mm	0.01mm	**115-302**	±3µm	Type A	180
		115-308	±3µm	Type B	180
		115-315	±3µm	Type C	180
		115-316	±3µm	Type D	180
25 - 50mm	0.01mm	**115-303**	±3µm	Type A	240
		115-309	±3µm	Type B	240

Inch With cylindrical anvil

Range	Graduation	Order No.	Accuracy	Remarks	Mass (g)
0 - 1"	.001"	**115-305**	±.00015"	Type A	180
	.0001"	**115-313***	±.00015"	Type C	180
	.0001"	**115-314***	±.00015"	Type D	180

*.0001" reading is obtained with vernier.

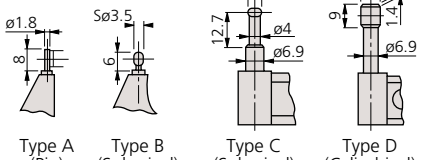

Type A (Pin) | Type B (Spherical) | Type C (Spherical) | Type D (Cylindrical)

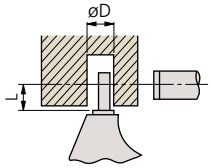

øD: Mini. inside dia. of tubing
Spindle face: Carbide tipped

Anvil	D	L
Type A	2	4
Type B	3.6	4
Type C	4.8	12
Type D	8.2	22

"Uni-Mike"

SERIES 317, 117 — Interchangeable Anvil Type

FEATURES

- IP65 water/dust protection (Series 317).
- Measures tubing thickness, shoulder-edge distance, rivet head height, etc. with interchangeable anvils (flat anvil, rod anvil, V-anvil).
- Supplied with Flat Anvil (**201216**) and Rod Anvil: .118"/ø3mm dia. rod anvil (**201217**) for 0-1"/0-25mm models, .197"/ø5mm (**201379**) for 1-2" / 25-50mm model.
- With special Disk Anvils. The Uni-Mike is used as a height micrometer. The disks have a lapped, mirror surface.
- With a standard bar except 0 -1" and 0-25mm model.
- Supplied in fitted plastic case.
- Non-slip grip finish (digital models)



317-351-30



117-107

Technical Data

Accuracy: Refer to the list of specifications.
Resolution*: .00005"/0.001mm or 0.001mm
Graduation**: .0001" or 0.01mm
Spindle face: Carbide tipped
Display*: LCD
Battery*: SR44 (1 pc.), **938882**
Battery life*: Approx. 2.4 years under normal use
Dust/Water protection level*: IP65
*Digital models **Analog models

Function of Digital Model

Origin-set, Zero / ABS, Data hold, Data output, inch/mm conversion (on inch/metric models only)
Function Lock
Alarm: Low voltage, Counting value composition error

Optional Accessories

05CZA662: SPC cable with data switch (40"/ 1m)*
05CZA663: SPC cable with data switch (80" / 2m)*
201218: V-anvil
950758: Disc. anvil for 1" / 25m models

*Only for digital models.

SPECIFICATIONS

Metric Digital model with ratchet stop

Range	Resolution	Order No.	Accuracy	Mass (g)
0 - 25mm	0.001mm	**317-251-30**	±4µm	335
25 - 50mm	0.001mm	**317-252-30**	±4µm	360

Excluding quantizing error

Inch/Metric Digital model with friction thimble

Range	Resolution	Order No.	Accuracy	Mass (g)
0 - 1" / 0 - 25.4mm	.00005" / 0.001mm	**317-351-30**	±.0002"	340
1 - 2" /25.4 - 50.8mm	.00005" / 0.001mm	**317-352-30**	±.0002"	365

Excluding quantizing error

Metric With ratchet stop

Range	Graduation	Order No.	Accuracy	Mass (g)
0 - 25mm	0.01mm	**117-101**	±4µm	255
25 - 50mm	0.01mm	**117-102**	±4µm	320

Inch With friction thimble

Range	Graduation	Order No.	Accuracy	Mass (g)
0 - 1"	.0001"	**117-107***	±.0002"	255
1 - 2"	.0001"	**117-108***	±.0002"	320

* .0001" reading is obtained with vernier.

Applications



Using flat anvil (201216)



With the disc. anvil (950758) Shown above, the Uni-Mike is used as a height micrometer.

DIMENSIONS

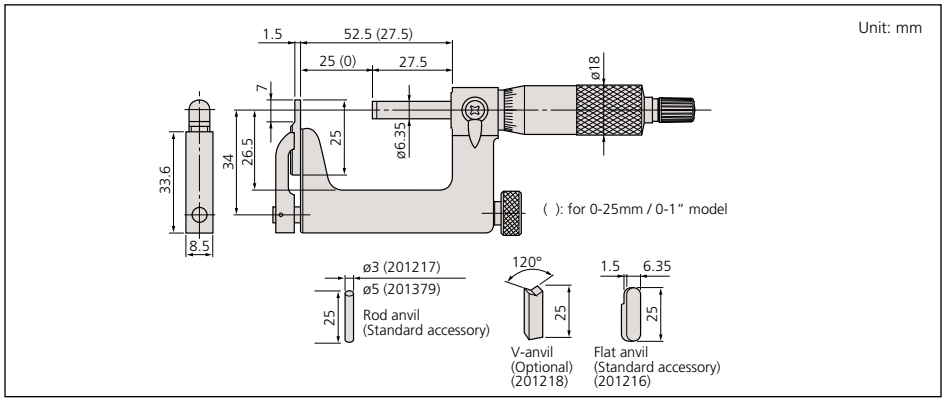

Sheet Metal Micrometers

SERIES 389, 119, 118

FEATURES

- Measures thickness of sheet metal, paper, plastic and rubber parts.
- With ratchet stop for constant force.
- With a standard bar except for 0 - 1" / 0 - 25mm model.
- IP65 water/dust protection (Series 389*).
  *Except for **389-514 / 389-714.**
- Supplied in fitted plastic case.
- Non-slip grip finish (digital models).



DIMENSIONS

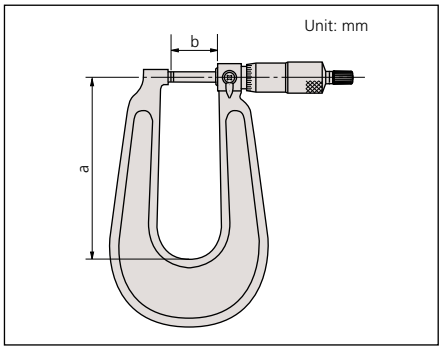

Technical Data

Accuracy: Refer to the list of specifications
Resolution*: .00005"/0.001mm or 0.001mm
Graduation**: 0.01mm, .001" or .0001"
Flatness: .000024" / 0.6µm for models with 6" / 150mm throat
.00004" / 1µm for models with 12" / 300mm throat
Parallelism: .00012" / 3µm
Measuring faces: Carbide tipped
Display*: LCD
Battery*: SR44 [1 pc. (2 pcs.: **389-514** and **389-714**)], **938882**
Battery life*: Approx. 2.4 years under normal use (1.8 years: **389-514** and **389-714**)
Dust/Water protection level*: IP65
*Digital models **Analog models

Function of Digital Model

Origin-set, Zero-setting, Data hold, Data output, inch/mm conversion (on inch/metric models only)
Function lock
Alarm: Low voltage, Counting value composition error

Optional Accessories for Digital Model

05CZA662: SPC cable with data switch (40" / 1m)
05CZA663: SPC cable with data switch (80" / 2m)
04AZB512: SPC cable for **389-514/389-714** (40" / 1m)
04AZB513: SPC cable for **389-514/389-714** (80" / 2m)

SPECIFICATIONS

Metric Digital model

Range	Resolution	Order No.	Accuracy	a/b
0 - 25mm	0.001mm	**389-251-30**	±4µm	160/27.5mm
0 - 25mm	0.001mm	**389-261-30**S-F	±4µm	160/27.5mm
0 - 25mm	0.001mm	**389-271-30**S-S	±4µm	160/27.5mm
0 - 25mm	0.001mm	**389-514**	±5µm	330/35mm
25 - 50mm	0.001mm	**389-252-30**	±4µm	165/27.5mm
25 - 50mm	0.001mm	**389-262-30**S-F	±4µm	165/27.5mm
25 - 50mm	0.001mm	**389-272-30**S-S	±4µm	165/27.5mm

S-F: Spherical anvil and flat spindle
S-S: Spherical anvil and spherical spindle

Inch/Metric Digital model

Range	Resolution	Order No.	Accuracy	a/b
0 - 1" / 0 - 25.4mm	.00005" / 0.001mm	**389-351-30**	±.0002"	6.3"/1.08"
		389-361-30S-F	±.0002"	6.3"/1.08"
		389-371-30S-S	±.0002"	6.3"/1.08"
		389-714	±.00025"	13"/1.38"
1 - 2" / 25.4 - 50.8mm	.00005" / 0.001mm	**389-352-30**	±.0002"	6.5"/1.08"
		389-362-30S-F	±.0002"	6.5"/1.08"
		389-372-30S-S	±.0002"	6.5"/1.08"

S-F: Spherical anvil and flat spindle
S-S: Spherical anvil and spherical spindle

Anvil-Spindle Combinations


Standard, Flat-Flat


Spherical-Flat (S-F)


Spherical-Spherical (S-S)

Metric

Range	Graduation	Order No.	Accuracy	a/b
0 - 25mm	0.01mm	**118-101**	±4µm	110/27.5mm
0 - 25mm	0.01mm	**118-102**	±4µm	160/27.5mm
0 - 25mm	0.01mm	**118-114**S-F	±4µm	160/27.5mm
0 - 25mm	0.01mm	**118-118**S-S	±4µm	160/27.5mm
0 - 25mm	0.01mm	**118-103**	±5µm	330/35mm
25 - 50mm	0.01mm	**118-110**	±4µm	165/27.5mm

S-F: Spherical anvil and flat spindle
S-S: Spherical anvil and spherical spindle

Inch

Range	Graduation	Order No.	Accuracy	a/b
0 - 1"	.0001"	**118-129**	±.0002"	6.3"/1.08"
		118-116S-F	±.0002"	6.3"/1.08"
		118-120S-S	±.0002"	6.3"/1.08"
	.001"	**118-107**	±.00025"	13"/1.38"
1" - 2"	.001"	**118-112**	±.0002"	6.5"/1.08"

S-F: Spherical anvil and flat spindle
S-S: Spherical anvil and spherical spindle
*.0001" reading is obtained with vernier.

Metric Dial reading model

Range	Graduation	Order No.	Accuracy	Throat
0 - 25mm	0.01mm	**119-202**S-F	±4µm	50mm

S-F: Spherical anvil and flat spindle

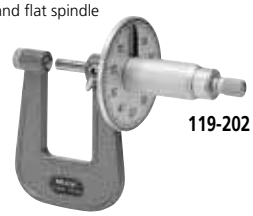
119-202

DIMENSIONS AND MASS

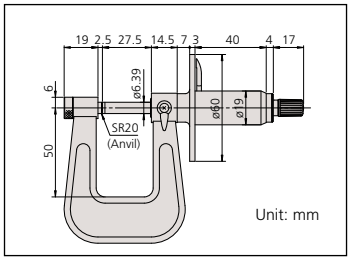

The Series 119 is provided with a dial for making easy and quick readings.



Blade Micrometers

SERIES 422,122 — Non-Rotating Spindle Type

Technical Data

Accuracy: Refer to the list of specifications
Resolution*: .00005"/0.001mm or 0.001mm
Graduation**: .0001" or 0.01mm
Parallelism: .00012" / 3µm for models up to 3" / 75mm
(3+R/100)µm for models over 75mm,
R=max. range (mm) .00016" for 4" models
Display*: LCD
Battery*: SR44 (1 pc.), **938882**
Battery life*: Approx. 2.4 years under normal use
*Digital models **Analog models

Function of Digital Model

Origin-set, Zero / ABS, Data hold, Data output,
inch/mm conversion (on inch/metric models only)
Function lock
Alarm: Low voltage, Counting value composition error

Optional Accessories for Digital Model

05CZA662: SPC cable with data switch (1m / 40")
05CZA663: SPC cable with data switch (2m / 80")
937387: SPC cable for Quickmike type (1m / 40")
965013: SPC cable for Quickmike type (2m / 80")

TYPE AND DIMENSIONS

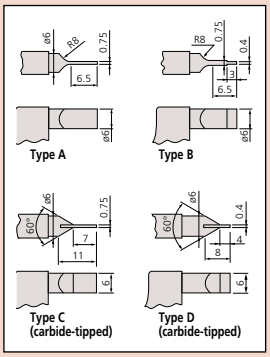

FEATURES

- The anvil and the spindle have a blade for measuring the groove diameter of shafts, keyways and other hard-to-reach areas.
- With ratchet stop for constant force.
- Non-slip grip finish (digital models).
- Speedy spindle feed of .4"/10mm /rev. (Quickmike type).
- With a standard bar except 0 - 1" and 0 -25mm model.
- Supplied in fitted plastic case.

Quickmike type







SPECIFICATIONS

Metric Digital model

Range	Resolution	Order No.	Accuracy	Remarks	Mass (g)
0 - 25mm	0.001mm	**422-230-30**	±3µm	Type A	365
		422-260-30	±3µm	Type B	365
		422-270-30	±3µm	Type C	365
		422-271-30	±3µm	Type D	365
25 - 50mm	0.001mm	**422-231-30**	±3µm	Type A	565
		422-261-30	±3µm	Type B	565
50 - 75mm	0.001mm	**422-232-30**	±3µm	Type A	465
75 - 100mm	0.001mm	**422-233-30**	±4µm	Type A	580

Metric Quickmike type

Range	Resolution	Order No.	Accuracy	Mass (g)
0 - 30mm	0.001mm	**422-411**	±3µm	350
25 - 55mm	0.001mm	**422-412**	±3µm	490

Metric

Range	Graduation	Order No.	Accuracy	Remarks	Mass (g)
0 - 25mm	0.01mm	**122-101**	±3µm	Type A	260
		122-111	±3µm	Type B	260
		122-161	±3µm	Type C	275
		122-141	±3µm	Type D	275
25 - 50mm	0.01mm	**122-102**	±3µm	Type A	300
		122-112	±3µm	Type B	300
		122-162	±3µm	Type C	315
		122-142	±3µm	Type D	315
50 - 75mm	0.01mm	**122-103**	±3µm	Type A	360
75 - 100mm	0.01mm	**122-104**	±4µm	Type A	525
100 - 125mm	0.01mm	**122-105**	±4µm	Type A	670
125 - 150mm	0.01mm	**122-106**	±4µm	Type A	775
150 - 175mm	0.01mm	**122-107**	±5µm	Type A	950
175 - 200mm	0.01mm	**122-108**	±5µm	Type A	1140

Inch/Metric Digital model

Range	Resolution	Order No.	Accuracy	Remarks	Mass (g)
0 - 1" / 0 - 25.4mm	.00005" / 0.001mm	**422-330-30**	±.00015"	Type A	365
		422-360-30	±.00015"	Type B	365
		422-370-30	±.00015"	Type C	365
		422-371-30	±.00015"	Type D	365
1 - 2" / 25.4 - 50.8mm	.00005" / 0.001mm	**422-331-30**	±.00015"	Type A	565
		422-361-30	±.00015"	Type B	565
2 - 3" / 50.8 - 76.2mm	.00005" / 0.001mm	**422-332-30**	±.00015"	Type A	465
3 - 4" / 76.2 - 101.6mm	.00005" / 0.001mm	**422-333-30**	±.0002"	Type A	580

Inch/Metric Quickmike type

Range	Resolution	Order No.	Accuracy	Remarks	Mass (g)
0 - 1.2" / 0 - 30.48mm	.00005" / 0.001mm	**422-421**	±.00015"	Type A	350
1 - 2.2" / 25.4 - 55.88mm	.00005" / 0.001mm	**422-422**	±.00015"	Type A	490

Inch

Range	Graduation	Order No.	Accuracy	Remarks	Mass (g)
0 - 1"	.0001"	**122-125**	±.00015"	Type A	260
		122-135	±.00015"	Type B	260
		122-151	±.00015"	Type D	275
1 - 2"	.0001"	**122-126**	±.00015"	Type A	300
2 - 3"	.0001"	**122-127**	±.00015"	Type A	360
3 - 4"	.0001"	**122-128**	±.0002"	Type A	525

Disk Micrometers

SERIES 323, 223, 123 - Rotating Spindle

FEATURES

- Diameter of measuring disk: .787"/ 20mm.
- .028"/ 0.7mm (1mm: models over 100mm) edge thickness to enter narrow recesses.
- With ratchet stop for constant force.
- Non-slip grip finish (digital models).
- With a standard bar except for 0 - 1"/ 0 - 25mm model.
- With SPC output (Series 323).
- The Series 223 is provided with a mechanical digit counter for quick reading of measurements.
- Supplied in fitted plastic case. (Over 100mm models supplied wooden cases).



123-125



323-350-30



123-103



223-125

Technical Data

Accuracy: Refer to the list of specifications
Resolution*: .00005"/0.001mm or 0.001mm
Graduation**: .001" or 0.01mm
Flatness: .00004" / 1µm for models up to 4"/100mm
.000063" / 1.6µm for models over 4"/ 100mm
Parallelism: .00016" / 4µm for models up to 2"/ 50mm
.00024" for models up to 4"
(4+R/50)µm for models up to 100mm
(5+R/75)µm for models over 100mm, R=max. range (mm)
Measurable module: 0.5-6 (0.7-11: models over 100mm)
Display*: LCD
Battery*: SR44 (1 pc.), **938882**
Battery life*: Approx. 2.4 years under normal use
*Digital models **Analog models

Function of Digital Model

Origin-set, Zero / ABS, Data hold, Data output, inch/mm conversion (on inch/metric models only)
Function lock
Alarm: Low voltage, Counting value composition error

Optional Accessories for Digital Model

05CZA662: SPC cable with data switch (40" / 1m)
05CZA663: SPC cable with data switch (80" / 2m)

SPECIFICATIONS

Metric Digital model

Range	Resolution	Order No.	Accuracy	Mass (g)
0 - 25mm	0.001mm	**323-250-30**	±4µm	290
25 - 50mm	0.001mm	**323-251-30**	±4µm	355
50 - 75mm	0.001mm	**323-252-30**	±6µm	555
75 - 100mm	0.001mm	**323-253-30**	±6µm	610

Inch/Metric Digital model

Range	Resolution	Order No.	Accuracy	Mass (g)
0 - 1"/0 - 25.4mm	.00005"/ 0.001mm	**323-350-30**	±.0002"	290
1 - 2"/25.4 - 50.8mm	.00005"/0.001mm	**323-351-30**	±.0002"	355
2 - 3"/50 - 76.2mm	.00005"/0.001mm	**323-352-30**	±.0003"	555
3 - 4"/76.2 - 101.6mm	.00005"/0.001mm	**323-353-30**	±.0003"	610

Metric Mechanical counter model

Range	Graduation	Order No.	Accuracy	Mass (g)
0 - 25mm	0.01mm	**223-101**	±4µm	260
25 - 50mm	0.01mm	**223-102**	±4µm	290

Inch Mechanical counter model

Range	Graduation	Order No.	Accuracy	Mass (g)
0 - 1"	.001"	**223-125**	±.0002"	260

Metric

Range	Graduation	Order No.	Accuracy	Mass (g)
0 - 25mm	0.01mm	**123-101**	±4µm	200
		123-113*	±4µm	230
25 - 50mm	0.01mm	**123-102**	±4µm	250
		123-114*	±4µm	270
50 - 75mm	0.01mm	**123-103**	±6µm	300
		123-115*	±6µm	320
75 - 100mm	0.01mm	**123-104**	±6µm	375
		123-116*	±6µm	390
100 - 125mm	0.01mm	**123-105**	±7µm	520
125 - 150mm	0.01mm	**123-106**	±7µm	570
150 - 175mm	0.01mm	**123-107**	±8µm	730
175 - 200mm	0.01mm	**123-108**	±8µm	890
200 - 225mm	0.01mm	**123-109**	±8µm	1000
225 - 250mm	0.01mm	**123-110**	±9µm	1200
250 - 275mm	0.01mm	**123-111**	±9µm	1410
275 - 300mm	0.01mm	**123-112**	±9µm	1680

*The measuring disks have carbide tips.
Note: The disk diameter of models over 100mm is 30mm.

Inch

Range	Graduation	Order No.	Accuracy	Mass (g)
0 - 1"	.001"	**123-125**	±.0002"	200
1 - 2"	.001"	**123-126**	±.0002"	250
2 - 3"	.001"	**123-127**	±.0003"	300
3 - 4"	.001"	**123-128**	±.0003"	375

Root tangent length of gear (En)

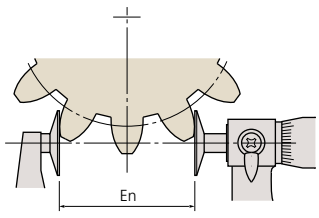

Note: Root tangent length measurement is not available for some types of gears.



DIMENSIONS

Unit: mm

Digital models up to 75mm

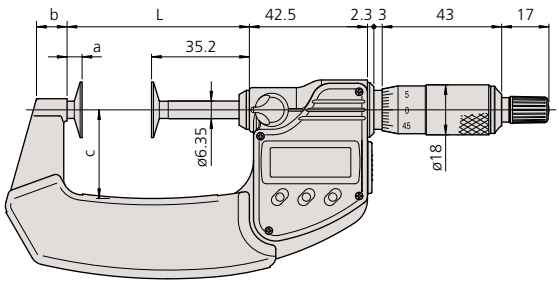

Analog models up to 50mm

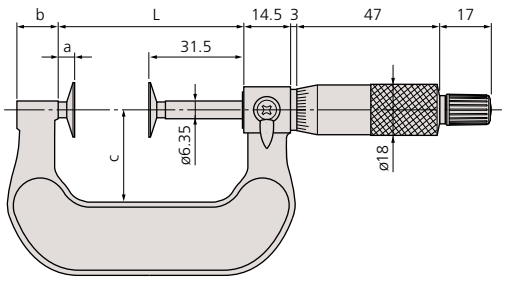

Digital models up to 75mm

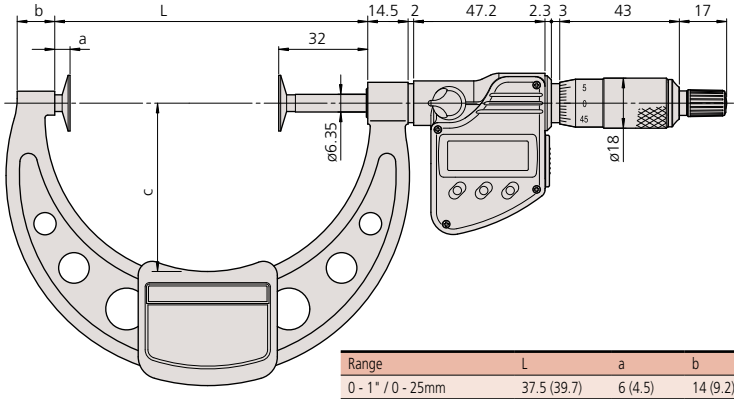

Analog over 50mm

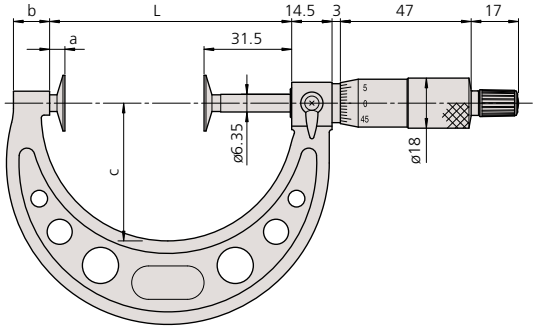

Range	L	a	b	c	ød	øe	t
0 - 1" / 0 - 25mm	37.5 (39.7)	6 (4.5)	14 (9.2)	25 (25.4)	20	8 (9.8)	0.7
1 - 2" / 25 - 50mm	62.5 (65.6)	6 (5.4)	14 (11)	32 (31.9)	20	8 (9.8)	0.7
2 - 3" / 50 - 75mm	87 (90.7)	5.5 (5.5)	11 (12.2)	49 (50)	20	8 (9.8)	0.7
3 - 4" / 75 - 100mm	112 (112.5)	5.5 (5.5)	11 (13.5)	63 (60.5)	20	8 (9.8)	0.7
4 - 5" / 100 - 125mm	137.5	6	12	79	30	12	1
5 - 6" / 125 - 150mm	162.5	6	15	94	30	12	1
6 - 7" / 150 - 175mm	187.5	6	16	106	30	12	1
7 -8" / 175 - 200mm	212.5	6	15	118	30	12	1
8 - 9" / 200 - 225mm	237.5	6	14	130	30	12	1
9 - 10" / 225 - 250mm	262.5	6	14	143	30	12	1
10 - 11" / 250 - 275mm	287.5	6	15	156	30	12	1
11 - 12" / 275 - 300mm	312.5	6	15	169	30	12	1

Data in ( ) applies to those with carbide tipped disks.

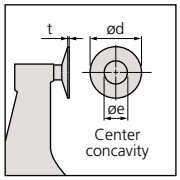

Technical Data

Graduation: .001" or 0.01mm
Flatness: .00004" / 1µm
Parallelism: .00012" / 3µm
Measuring Force: 8.02 ±0.8N
53.9KPa ±4.9 KPa



Unit: mm

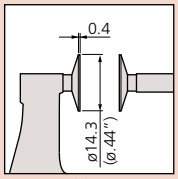

( ): Inch model

Paper Thickness Micrometers

SERIES 169 — Non-Rotating Spindle Type Designed for Paper Thickness Measurement

FEATURES

- Non-rotating spindle.
- With ratchet stop for constant force.
- Supplied in fitted plastic case.



169-101

DIMENSIONS

Unit: mm

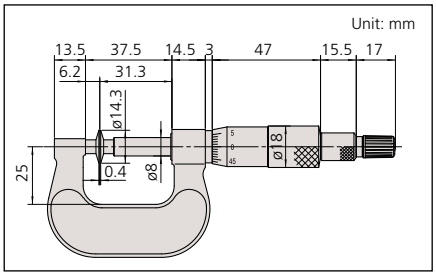

SPECIFICATIONS

Metric

Range	Graduation	**Order No.**	Accuracy	Mass (g)
0 - 25mm	0.01mm	**169-101**	±4µm	230g

Inch

Range	Graduation	**Order No.**	Accuracy	Mass (g)
0 - 1"	.001"	**169-103**	±.0002"	230g

Mitutoyo

Disk Micrometers

SERIES 369, 227, 169 — Non-Rotating Spindle Type

SPC

FEATURES

- The Disk Micrometer is designed to easily measure root tangent length of spur gears and helical gears.
- Non-rotating spindle eliminates torque on workpiece.
- With standard bar except 0 - 15mm, 0 - .6" 0 - 25mm, 0 - 1", 0 - 30mm & 0 - 1.2" model.
- Speedy spindle feed of 10mm/rev. (Quickmike type).
- Diameter of measuring disk: .787" / 20mm
- With ratchet stop for constant force.
- With SPC output (Series 369).
- Supplied in fitted plastic case.
- Non-slip grip finish (digital models).



369-350-30

Quickmike type



369-421

IP54

ABSOLUTE

Quickmike type with adjustable measuring force



227-221

ABSOLUTE



169-201

Technical Data

Accuracy: Refer to the list of specifications
Resolution*: .00005"/0.001mm or 0.001mm
Graduation**: .001" or 0.01mm
Flatness: .00004" / 1µm
Parallelism: 4µm / .00016" for models up to 2" / 50mm
6µm / .00024" for models over 2" / 50mm
Measurable module: 0.5-6
Display*: LCD
Battery*: SR44 (1 pc.), **938882**
Battery life*: Approx. 2.4 years under normal use
(1 year: Quickmike type, 3 years: Quickmike type with fine-loading)
Series 227: Refer to page B-6 for more information.
*Digital models **Analog models

Function of Digital Model

Origin-set, Zero / ABS, Data hold, Data output, inch/mm conversion (on inch/metric models only)
Function lock
Alarm: Low voltage, Counting value composition error

Optional Accessories for Digital Model

05CZA662: SPC cable with data switch (40" / 1m)
05CZA663: SPC cable with data switch (80" / 2m)
937387: SPC cable for Quickmike type (40" / 1m)
965013: SPC cable for Quickmike type (80" / 2m)

SPECIFICATIONS

Metric Digital model

Range	Resolution	Order No.	Accuracy
0 - 25mm	0.001mm	**369-250-30**	±4µm
25 - 50mm	0.001mm	**369-251-30**	±4µm
50 - 75mm	0.001mm	**369-252-30**	±6µm
75 - 100mm	0.001mm	**369-253-30**	±6µm

Inch/Metric Digital model

Range	Resolution	Order No.	Accuracy
0 - 1" / 0 - 25.4mm	.00005" / 0.001mm	**369-350-30**	±.0002"
1 - 2" / 25.4 - 50.8mm	.00005" / 0.001mm	**369-351-30**	±.0002"
2 - 3" / 50.8 - 76.2mm	.00005" / 0.001mm	**369-352-30**	±.0003"
3 - 4" / 76.2 - 101.6mm	.00005" / 0.001mm	**369-353-30**	±.0003"

Metric Quickmike type

Range	Resolution	Order No.	Accuracy
0 - 30mm	0.001mm	**369-411**	±4µm
25 - 55mm	0.001mm	**369-412**	±4µm

Inch/Metric Quickmike type

Range	Resolution	Order No.	Accuracy
0 - 1.2" / 0 - 30.48mm	.00005" / 0.001mm	**369-421**	±.0002"
1 - 2.2" / 25.4 - 55.88mm	.00005" / 0.001mm	**369-422**	±.0002"

Metric Quickmike type with adjustable measuring force

Range	Resolution	Order No.	Accuracy	Measuring force
0 - 10mm	0.001mm	**227-223**	±4µm	2N - 10N
0 - 15mm	0.001mm	**227-221**	±4µm	0.5N - 2.5N

Metric

Range	Graduation	Order No.	Accuracy
0 - 25mm	0.01mm	**169-201**	±4µm
25 - 50mm	0.01mm	**169-202**	±4µm
50 - 75mm	0.01mm	**169-205**	±6µm
75 - 100mm	0.01mm	**169-207**	±6µm

Inch

Range	Graduation	Order No.	Accuracy
0 - 1"	.001"	**169-203**	±.0002"
1 - 2"	.001"	**169-204**	±.0002"
2 - 3"	.001"	**169-206**	±.0003"
3 - 4"	.001"	**169-208**	±.0003"

DIMENSIONS AND MASS

Unit: mm

Digital models up to 75mm

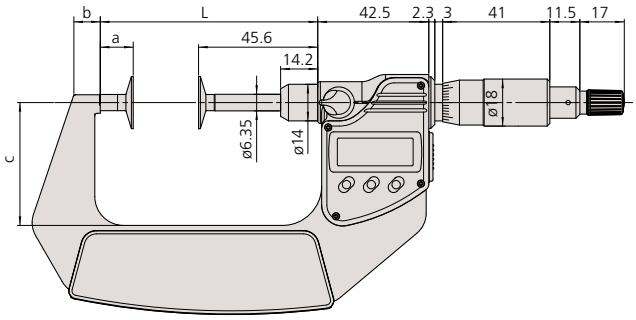

Adjustable measuring force type

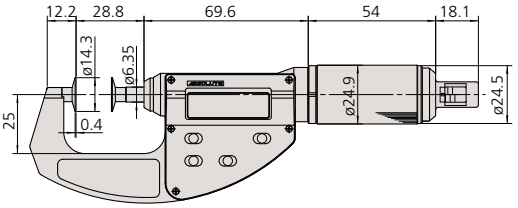

Digital models over 75mm

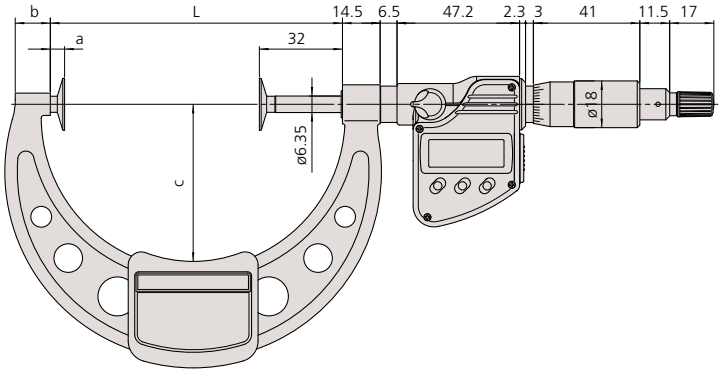

Analog models up to 50mm

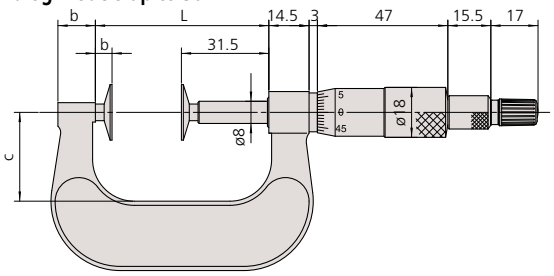

Quickmike type

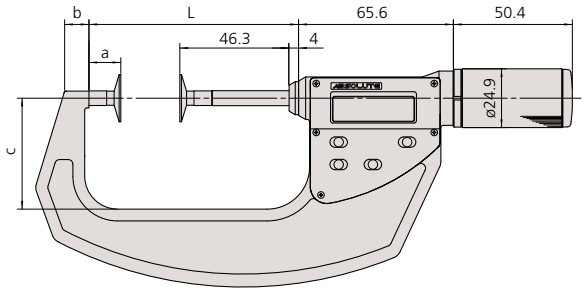

Analog models over 50mm

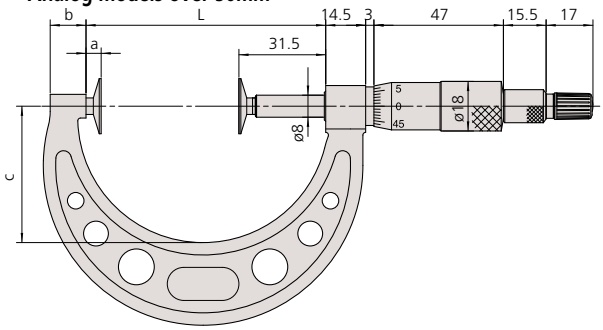

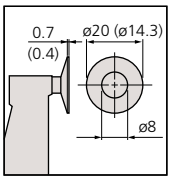

( ): Adjustable measuring force type

Digital model

Range	L	a	b	c	Mass (g)
0 - 25mm / 0 - 1"	58.5	12.9	7	32	340
25 - 50mm / 1 - 2"	83.5	12.9	9.8	47	480
50 - 75mm / 2 - 3"	108.5	12.9	11.2	60	635
75 - 100mm / 3 - 4"	112.5	5.5	13.5	60.5	475
0 - 30mm* / 0 - 1.2"	63.8	13.5	8.5	36	360
25 - 55mm* / 1 - 2.2"	88.8	13.5	10.3	47	490

*Quickmike type

Analog model

Range	L	a	b	c	Mass (g)
0 - 25mm / 0 - 1"	37.5	6	13.5	25	230
25 - 50mm / 1 - 2"	62.5	6	13.5	32	280
50 - 75mm / 2 - 3"	87	5.5	13	49.5	315
75 - 100mm / 3 - 4"	112	5.5	13	63.5	400

Gear Tooth Micrometers

SERIES 324, 124 — Interchangeable Ball Anvil-Spindle Tip Type

FEATURES

- IP65 water/dust protection (Series 324).
- Measures over-pin diameter of gears with precision steel (carbide) ball-tipped measuring faces.
- With a standard bar except 0 - 25mm and 0 - 1″ model
- Non-slip grip finish (digital models)
- Interchangeable ball anvil-spindle tips for various gear modules (0.5 - 5.25) are optional.
- With Ratchet Stop for constant force.
- With SPC output (Series 324).
- Supplied in fitted plastic case (Models over 150mm have wooden case).



324-351-30



124-173
Shown with optional ball anvils

Technical Data

Accuracy: Refer to the list of specifications
Resolution*: 0.001mm or .00005"/0.001mm
Graduation**: 0.01mm
Display*: LCD
Battery*: SR44 (1 pc.), **938882**
Battery life*: Approx. 2.4 years under normal use
Dust/Water protection level*: IP65
*Digital models **Analog models

Function of Digital Model

Zero / ABS, Data hold, Data output, Preset, inch/mm conversion (on inch/metric models only)
Function Lock, 2 Presets
Alarm: Low voltage, Counting value composition error

Optional Accessories

05CZA662: SPC cable with data switch (1m / 40″)*
05CZA663: SPC cable with data switch (2m / 80″)*
*Only for digital models



SPECIFICATIONS

Metric Digital model

Range	Resolution	Order No.	Accuracy	Mass (g)
0 - 25mm	0.001mm	**324-251-30**	±4µm	400
25 - 50mm	0.001mm	**324-252-30**	±4µm	490
50 - 75mm	0.001mm	**324-253-30**	±4µm	530
75 - 100mm	0.001mm	**324-254-30**	±5µm	600

Inch/Metric Digital model

Range	Resolution	Order No.	Accuracy	Mass (g)
0 - 1"/0 - 25mm	.00005″/0.001mm	**324-351-30**	±.0002"	400
1 - 2"/25 - 50mm	.00005″/0.001mm	**324-352-30**	±.0002"	490
2 - 3"/50 - 75mm	.00005″/0.001mm	**324-353-30**	±.0002"	530
3 - 4"/75 - 100mm	.00005″/0.001mm	**324-354-30**	±.00025"	600

Metric

Range	Graduation	Order No.	Accuracy	Mass (g)
0 - 25mm	0.01mm	**124-173**	±4µm	295
25 - 50mm	0.01mm	**124-174**	±4µm	400
50 - 75mm	0.01mm	**124-175**	±4µm	460
75 - 100mm	0.01mm	**124-176**	±5µm	540
100 - 125mm	0.01mm	**124-177**	±5µm	640
125 - 150mm	0.01mm	**124-178**	±5µm	760
150 - 175mm	0.01mm	**124-179**	±6µm	900
175 - 200mm	0.01mm	**124-180**	±6µm	1060
200 - 225mm	0.01mm	**124-181**	±6µm	1230
225 - 250mm	0.01mm	**124-182**	±7µm	1430
250 - 275mm	0.01mm	**124-183**	±7µm	1620
275 - 300mm	0.01mm	**124-195**	±7µm	2070

DIMENSIONS AND MASS

Unit: mm

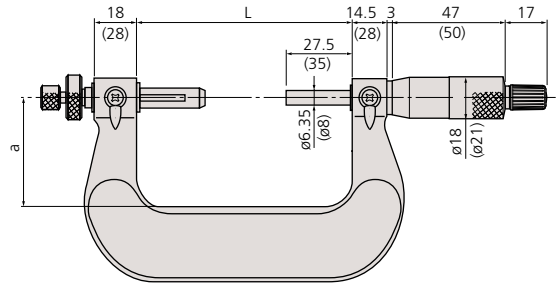

( ): 275-300mm model

Range	L	a	Mass (g)
0 - 25mm	64.5	32	295
25 - 50mm	90	45	400
50 - 75mm	115.6	65	460
75 - 100mm	140.6	79	540
100 - 125mm	165.6	93	640
125 - 150mm	190.5	105	760
150 - 175mm	215.5	120	900
175 - 200mm	240.5	130	1060
200 - 225mm	265.5	147	1230
225 - 250mm	290.5	165	1430
250 - 275mm	315.5	171	1620
275 - 300mm	353	187	2070

Interchangeable ball anvil-spindle tip set:

Diameter of ball anvil	Order No.	Gear module	Diametral pitch
0.8mm	**124-801***	0.5 - 0.55	50
1mm	**124-802***	0.6 - 0.65	45
1.191mm (3/64")	**124-803***	0.7 - 0.8	35 - 30
1.5mm	**124-821***	0.9 - 1	28 - 26
1.588mm (1/16")	**124-804***	0.9 - 1	28 - 26
2mm	**124-805***	1.25	22
2.381mm (3/32")	**124-806**	1.5	17
2.5mm	**124-822**	1.5	17
3mm	**124-807**	1.75	15
3.175mm (1/8")	**124-808**	—	14
3.5mm	**124-823**	2	13
3.969mm (5/32")	**124-809**	2	13
4mm	**124-810**	2.25	11
4.5mm	**124-824**	2.5	10
4.763mm (3/16")	**124-811**	2.5	10
5mm	**124-812**	2.75	9
5.556mm (7/32")	**124-813**	3.0 - 3.25	8
6mm	**124-814**	3.5	7
6.35mm (1/4")	**124-815**	3.75	7
7mm	**124-816**	4.0	6.5
7.144mm (9/32")	**124-817**	4.25	6
7.938mm (5/16")	**124-818**	4.5	5.5
8mm	**124-819**	4.75	5.5
8.731mm (11/32")	**124-820**	5.0 - 5.25	5

*Carbide-tipped type

Screw Thread Micrometers

SERIES 125

FEATURES

- Provided with a 60 degree V-anvil and conical spindle for easily measuring pitch diameters of metric or unified screw threads.
- With ratchet stop for constant force.
- With a standard bar for zero point adjustment except 0 - 25mm model.
- Supplied in fitted plastic case.



125-103

Technical Data

Accuracy: ±(2+R/75)µm, R=max. range (mm)
Graduation: 0.01mm
Spindle feed error: 3µm



SPECIFICATIONS

Metric

Range	Graduation	Order No.	Screw to be measured (Metric/Unified)
0 - 25mm	0.01mm	**125-101**	0.4 - 0.5mm/64 - 48TPI
		125-102	0.6 - 0.9mm/44 - 28TPI
		125-103	1 - 1.75mm/24 - 14TPI
		125-104	2 - 3mm/13 - 9TPI
		125-105	3.5 - 5mm/8 - 5TPI
25 - 50mm	0.01mm	**125-106**	0.4 - 0.5mm/64 - 48TPI
		125-107	0.6 - 0.9mm/44 - 28TPI
		125-108	1 - 1.75mm/24 - 14TPI
		125-109	2 - 3mm/13 - 9TPI
		125-110	3.5 - 5mm/8 - 5TPI
50 - 75mm	0.01mm	**125-111**	0.6 - 0.9mm/44 - 28TPI
		125-112	1 - 1.75mm/24 - 14TPI
		125-113	2 - 3mm/13 - 9TPI
		125-114	3.5 - 5mm/8 - 5TPI
		125-115	5.5 - 7mm/4.5 - 3.5TPI
75 - 100mm	0.01mm	**125-116**	0.6 - 0.9mm/44 - 28TPI
		125-117	1 - 1.75mm/24 - 14TPI
		125-118	2 - 3mm/13 - 9TPI
		125-119	3.5 - 5mm/8 - 5TPI
		125-120	5.5 - 7mm/4.5 - 3.5TPI

DIMENSIONS AND MASS

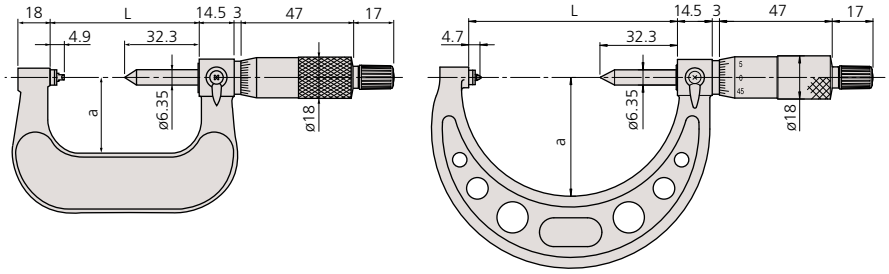

Unit: mm

Range	L	a	Mass (g)
0 - 25mm	37.2	25	200
25 - 50mm	62.2	32	250
50 - 75mm	87	49.5	260
75 - 100mm	112	63.5	330

Screw Thread Micrometers

SERIES 326, 126 — Interchangeable Anvil-Spindle Tip Type

FEATURES

- IP65 water/dust protection (Series 326).
- 60 degree or 55 degree V-anvil and conical spindle (interchangeable) are optional, which are made of high-grade steel, hardened and precision ground.
- With ratchet stop for constant force.
- With SPC output (Series 326).
- With a standard bar except 0 - 25mm and 0 - 1" model.
- Supplied in fitted plastic case.
- Non-slip grip finish (digital models).



126-125
Shown with optional anvils



326-351-30

Technical Data

Resolution*: 0.001mm or .00005"/0.001mm
Graduation**: 0.01mm or .001"
Spindle feed error: 3µm / .00012"
Display*: LCD
Battery*: SR44 (1 pc.), **938882**
Battery life*: Approx. 2.4 years under normal use
Dust/Water protection level*: IP65
*Digital models **Analog models

Function of Digital Model

Zero / ABS, Data hold, Data output, 2 Presets, Function Lock.
inch/mm conversion (on inch/metric models only)
Alarm: Low voltage, Counting value composition error

Optional Accessories

05CZA662: SPC cable with data switch (1m / 40")*
05CZA663: SPC cable with data switch (2m / 80")*
*Only for digital models
(See page B-51.): Standard for screw thread micrometer

SPECIFICATIONS

Metric Digital model

Range	Resolution	Order No.	Accuracy	Mass (g)
0 - 25mm	0.001mm	**326-251-30**	±4µm	350
25 - 50mm	0.001mm	**326-252-30**	±4µm	380
50 - 75mm	0.001mm	**326-253-30**	±4µm	470
75 - 100mm	0.001mm	**326-254-30**	±5µm	510

Inch/Metric Digital model

Range	Resolution	Order No.	Accuracy	Mass (g)
0 - 1" / 0 - 25.4mm	.00005" / 0.001mm	**326-351-30**	±.0002"	350
1 - 2" / 25.4 - 50.8mm	.00005" / 0.001mm	**326-352-30**	±.0002"	380
2 - 3" / 50.8 - 76.2mm	.00005" / 0.001mm	**326-353-30**	±.0002"	470
3 - 4" / 76.2 - 101.6mm	.00005" / 0.001mm	**326-354-30**	±.00025"	510

Metric

Range	Graduation	Order No.	Accuracy	Mass (g)
0 - 25mm	0.01mm	**126-125**	±4µm	240
25 - 50mm	0.01mm	**126-126**	±4µm	290
50 - 75mm	0.01mm	**126-127**	±4µm	390
75 - 100mm	0.01mm	**126-128**	±5µm	450
100 - 125mm	0.01mm	**126-129**	±5µm	530
125 - 150mm	0.01mm	**126-130**	±5µm	620
150 - 175mm	0.01mm	**126-131**	±6µm	730
175 - 200mm	0.01mm	**126-132**	±6µm	860
200 - 225mm	0.01mm	**126-133**	±6µm	1,030
225 - 250mm	0.01mm	**126-134**	±7µm	1,200
250 - 275mm	0.01mm	**126-135**	±7µm	1,370
275 - 300mm	0.01mm	**126-136**	±7µm	1,540

Inch

Range	Graduation	Order No.	Accuracy	Mass (g)
0 - 1"	.001"	**126-137**	±.0002"	240
1 - 2"	.001"	**126-138**	±.0002"	290
2 - 3"	.001"	**126-139**	±.0002"	390
3 - 4"	.001"	**126-140**	±.00025"	450
4 - 5"	.001"	**126-141**	±.00025"	530
5 - 6"	.001"	**126-142**	±.00025"	620
6 - 7"	.001"	**126-143**	±.0003"	730

Inch With anvil set (126 - 800)

Range	Graduation	Order No.	Accuracy	Mass (g)
0 - 1"	.001"	**126-901**	±.0002"	240
1 - 2"	.001"	**126-902**	±.0002"	290
2 - 3"	.001"	**126-903**	±.0002"	390
3 - 4"	.001"	**126-904**	±.00025"	450
4 - 5"	.001"	**126-905**	±.00025"	530
5 - 6"	.001"	**126-906**	±.00025"	620



Anvil-spindle tip set:

Applications	Set Order No.	Tip Information		
		Threads Per Inch	Pitch (mm)	**Individual Order No.**
Metric Screw, Unified screw (60° threads)	**126-800**	64-48 (M1)	0.4-0.5	**126-801**
		44-28 (M2)	0.6-0.9	**126-802**
		24-14 (M3)	1-1.75	**126-803**
		13-9 (M4)	2-3	**126-804**
		8-5 (M5)	3.5-5	**126-805**
		4.5-3.5 (M6)	5.5-7	**126-806**
Whitworth Screw (55° threads)	**126-810**	60-48	-	**126-811**
		48-40	-	**126-812**
		40-32	-	**126-813**
		32-24	-	**126-814**
		24-18	-	**126-815**
		18-14	-	**126-816**
		14-10	-	**126-817**
		10-7	-	**126-818**
		7-4.5	-	**126-819**
		4.5-3.5	-	**126-820**

Features: 60 degree or 55 degree V-anvil and conical spindle (interchangeable) are optional, which are made of high-grade special steel, hardened and precision ground.

Storage box included.

DIMENSIONS

Unit: mm

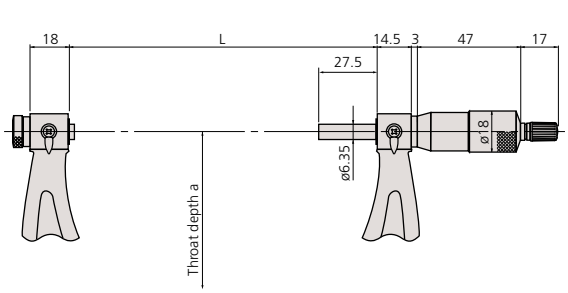

Range	L	a
0 - 25mm / 0 - 1"	39.5	25
25 - 50mm / 1 - 2"	64.5	32
50 - 75mm / 2 - 3"	90	45
75 - 100mm / 3 - 4"	115.6	65
100 - 125mm / 4 - 5"	140.6	79
125 - 150mm / 5 - 6"	165.6	93
150 - 175mm / 6 - 7"	190.5	105
175 - 200mm / 7 - 8"	215.5	120
200 - 225mm / 8 - 9"	240.5	130
225 - 250mm / 9 -10"	265.5	147
250 - 275mm / 10 - 11"	290.5	165
275 - 300mm / 11 - 12"	315.5	171

3-Wire Thread Measuring System

Individual Holder and Wire Set

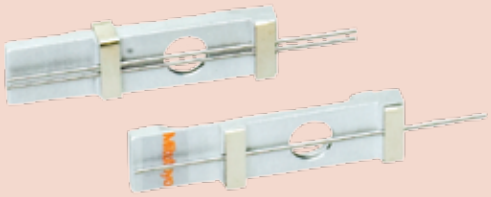

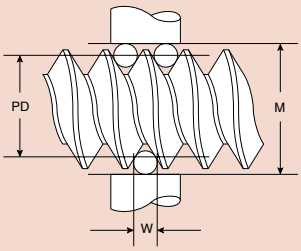

PD = Pitch Diameter
M = Measurement over wires
W = Wire diameter
C = Constant
C = .86603 x Pitch (inches) -3W
P.D. = M-C
W = .57735 x P

FEATURES

- Fast and accurate method of thread measuring available for use with micrometer

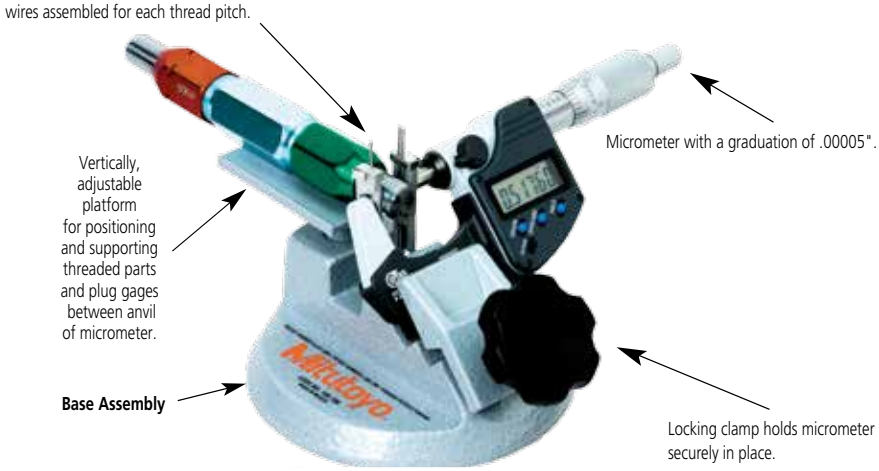

INCH STANDARD HOLDERS AND WIRES SETS

Order No. [1,2]	Threads Per Inch	Thread Measuring Wire Diameter
64AAA201	120	.00481
64AAA202	100	.00577
64AAA203	95	.00601
64AAA204	90	.00642
64AAA205	80	.00722
64AAA206	72	.00802
64AAA207	64	.00902
64AAA208	56	.01031
64AAA209	50	.01155
64AAA210	48	.01203
64AAA211	44	.01312
64AAA212	40	.01443
64AAA213	36	.01604
64AAA214	32	.01804
64AAA215	30	.01925
64AAA216	28	.02062
64AAA217	27	.02138
64AAA218	26	.02221
64AAA219	24	.02406
64AAA220	22	.02624
64AAA221	20	.02887
64AAA222	18	.03208
64AAA223	16	.03608
64AAA224	14	.04124
64AAA225	13	.04441
64AAA226	12	.04811
64AAA227	11.5	.05020
64AAA228	11	.05249
64AAA229	10	.05774
64AAA230	9	.06415
64AAA231	8	.07217
64AAA232	7.5	.07698
64AAA233	7	.08248
64AAA234	6	.09623
64AAA235	5.5	.10497
64AAA236	5	.11547

[1] For 6.35mm Spindle Diameter holder only, add "H" suffix to Order No. (i.e. 64AAA201H)
[2] For 8mm Spindle Diameter holder only, add "H8" suffix to Order No. (i.e. 64AAA201H8)

Compatible with micrometers with 0.25" anvils & spindles.

Stand Assembly
Order No. 156-106

METRIC HOLDERS AND WIRES SETS

Order No.[1]	Pitch	mm Diameter	Inch Diameter
64AAA251	.2mm	.1155	.00455
64AAA252	.225mm	.1299	.00511
64AAA253	.25mm	.1443	.00568
64AAA254	.30mm	.1732	.00682
64AAA255	.35mm	.2021	.00796
64AAA256	.40mm	.2309	.00909
64AAA257	.45mm	.2598	.01023
64AAA258	.50mm	.2887	.01137
64AAA259	.55mm	.3175	.01250
64AAA260	.60mm	.3464	.01364
64AAA261	.70mm	.4041	.01591
64AAA262	.75mm	.4330	.01705
64AAA263	.80mm	.4619	.01818
64AAA264	.85mm	.4907	.01932
64AAA265	.90mm	.5196	.02046
64AAA266	1.00mm	.5774	.02273
64AAA267	1.25mm	.7217	.02841
64AAA268	1.50mm	.8660	.03410
64AAA269	1.75mm	1.0104	.03978
64AAA270	2.00mm	1.1547	.04546
64AAA271	2.50mm	1.4434	.05683
64AAA272	3.00mm	1.7321	.06819
64AAA273	3.50mm	2.0207	.07956
64AAA274	4.00mm	2.3094	.09092

[1] For 6.35mm Spindle Diameter holder only, add "H" suffix to Order No. (i.e. 64AAA201H)

Applications

- Measure set of thread plug gages and working thread plug gages.
- Monitor the wear on working thread plug gages.
- Monitor and control pitch diameter variation during thread fabrication.
- Reduce measurement time to a fraction of the time normally taken using the traditional three wire method.
- Use in conjunction with go/no-go thread ring gages to control thread size to the most demanding specifications.
- Determine out of roundness and taper that may exist in threaded parts.
- Applications for preplating and post plating thread measurement.

Tolerance of Wires:

- Diameter +/- .000010"
- Roundness +/- .000010"
- Surface finish 2 micro inches AA, lapped.
- Hardness HRC 59-64
- Certification of accuracy included.
- Traceable to NIST.
- Meets or exceeds all ANSI and ISO specs.

Can Seam Micrometers

SERIES 147

FEATURES

- Measures the width, height, and depth of can seams.
- Three types of micrometers are available for: steel cans, aluminum cans and sprayer cans.
- Supplied in fitted carton.



147-103

Technical Data

Accuracy: ±.00012″ / ±3µm
Graduation: .001″ / 0.01mm

SPECIFICATIONS

Metric

Range	Graduation	Order No.	Remarks
0 - 13mm	0.01mm	**147-103**	for steel cans
		147-105	for aluminum cans
		147-202	for sprayer cans

Inch

Range	Graduation	Order No.	Remarks
0 - .5"	.001"	**147-104**	for steel cans
		147-106	for aluminum cans
		147-201	for sprayer cans

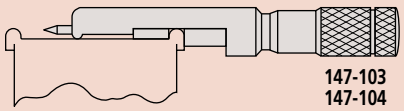

147-103
147-104

for cans
(for depth measurements up to 5mm)

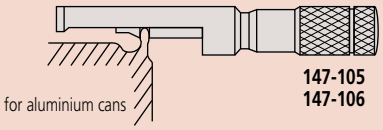

for aluminium cans

147-105
147-106

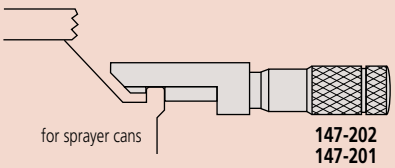

for sprayer cans

147-202
147-201

DIMENSIONS AND MASS

Unit: mm

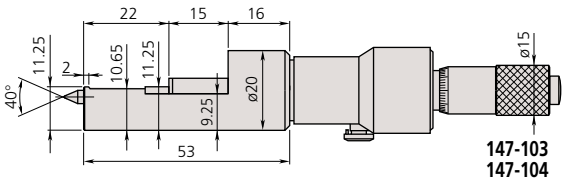

MASS: 65g

147-103
147-104

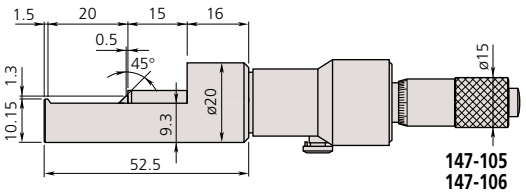

MASS: 65g

147-105
147-106

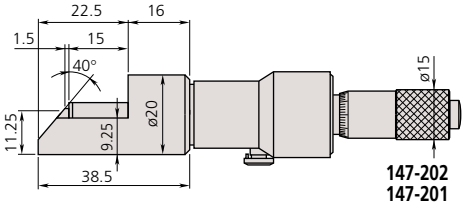

MASS: 65g

147-202
147-201



Hub Micrometers

SERIES 147

Technical Data

Accuracy: Refer to the list of specifications
Graduation: 0.01mm / .001"
Flatness: 0.6µm / .000024"
Parallelism: (2+R/100)µm, R=max. range (mm)
[.00008" + .00004" (L/4)]", L = Max. range (inch)
Measuring faces: Carbide tipped



Unit: mm

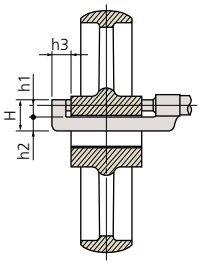

Range	h1	h2	h3	H	Mass (g)
0 - 1" / 0 - 25mm	6	8.5	13.5	17.5	135
1 - 2" / 25 - 50mm	6.5	11	14	20.5	150
3 - 4" / 50 - 75mm	6.5	11	13	20.5	170
4 - 5" / 75 -100mm	6.5	11	13	20.5	185

FEATURES

- Measures hub thickness and shoulders inside a bore.
- With ratchet stop for constant force.
- With a standard bar except for 0 - 1" / 0 - 25mm model.
- Supplied in fitted plastic case.



147-301



147-351

SPECIFICATIONS

Metric

Range	Graduation	Order No.	Accuracy
0 - 25mm	0.01mm	**147-301**	±2µm
25 - 50mm	0.01mm	**147-302**	±2µm
50 - 75mm	0.01mm	**147-303**	±2µm
75 - 100mm	0.01mm	**147-304**	±3µm

Inch

Range	Graduation	Order No.	Accuracy
0 - 1"	.001"	**147-351**	±.0001"
1 - 2"	.001"	**147-352**	±.0001"
2 - 3"	.001"	**147-353**	±.0001"
3 - 4"	.001"	**147-354**	±.00015"

Wire Micrometers

SERIES 147

FEATURES

- Designed for measuring wire thickness.
- Also used to measure the diameter of a small ball.
- Supplied in fitted plastic case.



147-402



147-401

SPECIFICATIONS

Metric

Range	Graduation	Order No.	Accuracy	Mass (g)
0 - 10mm	0.01mm	**147-401**	±3µm	65

Inch

Range	Graduation	Order No.	Accuracy	Mass (g)
0 - .4"	.0001"	**147-402***	±.00015"	65

* .0001" reading is obtained with vernier.

Technical Data

Graduation: .0001" or 0.01mm
Flatness: .000024" / 0.6µm
Parallelism: .00005" / 1.3µm
Measuring faces: Carbide tipped



DIMENSIONS AND MASS

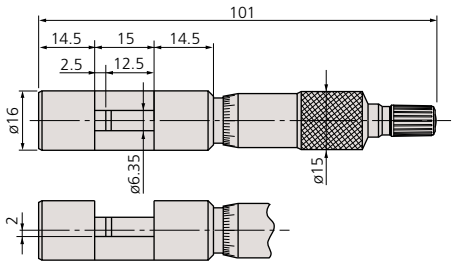

Unit: mm
MASS = 65g

Mitutoyo

Digital Outside Micrometers

SERIES 193

FEATURES

- Mechanical digit counter with 0.01mm or .001" reading for quick and error-free reading.
- With a standard bar except for 0-25mm / 0 -1" model.
- Supplied in fitted plastic case.



193-211

Technical Data

Counter reading: 0.01mm or .001"
Graduation: 0.01mm, 0.001mm, .001" or .0001"
Flatness: 0.6µm / .000024"
Parallelism: (2+R/100)µm, R=max. range (mm)
[.00008" + .00004" (L/4)]", L= max. range (inch)
Measuring faces: Carbide tipped



193-916

SPECIFICATIONS

Metric With ratchet stop

Range	Graduation	Order No.	Accuracy
0 - 25mm	0.01mm	**193-101**	±2µm
	0.001mm	**193-111***	±2µm
25 - 50mm	0.01mm	**193-102**	±2µm
	0.001mm	**193-112***	±2µm
50 - 75mm	0.01mm	**193-103**	±2µm
	0.001mm	**193-113***	±2µm
75 - 100mm	0.01mm	**193-104**	±3µm
	0.001mm	**193-114***	±3µm

*0.001mm reading is obtained with vernier.

Metric Micrometer sets

Range	Order No.	Included in set
0 - 75mm (3 pcs./set)	**193-901**	• **193-101, 193-102, 193-103** • 2 micrometer standards
0 - 75mm (3 pcs./set)	**193-915**	• **193-111, 193-112, 193-113,** • 2 micrometer standards
0 - 100mm (4 pcs./set)	**193-902**	• **193-101, 193-102, 193-103, 193-104** • 3 micrometer standards
0 - 100mm (4 pcs./set)	**193-916**	• **193-111, 193-112, 193-113, 193-114** • 3 micrometer standards

Inch With friction thimble

Range	Graduation	Order No.	Accuracy
0 - 1"	.0001"	**193-211***	±.0001"
1 - 2"	.0001"	**193-212***	±.0001"

*.0001" reading is obtained with vernier.

Inch With ratchet stop

Range	Graduation	Order No.	Accuracy
2 - 3"	.0001"	**193-213***	±.0001"
3 - 4"	.0001"	**193-214***	±.00015"

*.0001" reading is obtained with vernier.

Inch Micrometer sets

Range	Order No.	Included in set
0 - 3" (3 pcs./set)	**193-923**	• **193-211, 193-212, 193-213** • 2 micrometer standards

DIMENSIONS AND MASS

Models up to 100mm / 4"

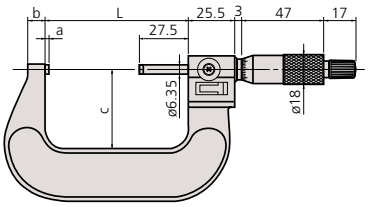

Unit: mm

Range	L	a	b	c	Mass (g)
0 - 25mm / 0 - 1"	30	2.5	5	26	224
25 - 50mm / 1 - 2"	55	2.5	8	32	275
50 - 75mm / 2 - 3"	80	2.5	9	45	379
75 - 100mm / 3 - 4"	105	2.5	9	57	489

Note: The shape of the thimble changes on the model with friction thimble.

Indicating Micrometers

SERIES 510

FEATURES

- Retractable anvil with indicator for three-wire measurements of pitch diameter of precision screws and parallelism measurements.
- With a standard bar except for 0 - 25mm / 0 - 1″ model.
- IP protection level: 54
- Supplied in fitted plastic case.



510-131

Technical Data

Spindle feed error: 3µm / .00012″
Dial indication accuracy: 1µm / .00004″
Dispersion of indication: 0.4µm / .00002″
Graduation: 0.001mm or .0001"
Dial reading: 0.001mm or .00005"
Flatness: 0.3µm / .000012″
Parallelism: 0.6µm / .000024″ for models up to 50mm / 2″
1µm / .00004″ for models over 50mm / 2″
Measuring force: 5 - 10N (500 - 1000gf)
Measuring faces: Carbide tipped

Optional Accessories

04AZA124: ø16mm / ø.63″ workpiece stopper (not available for 25mm / 1″ model)
04AZA125: ø14mm / ø.55" workpiece stopper
04AZA126: ø14mm / ø.55" workpiece stopper

Unit: mm

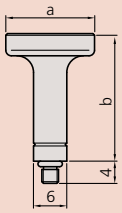

	a	b
04AZA124	16	23
04AZA125	14	20.5
04AZA126	14	15

DIMENSIONS AND MASS

Unit: mm

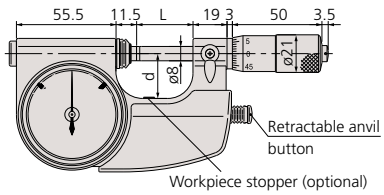

Range	L	d	Mass (g)
0 - 25mm / 0 - 1"	31.5	25	520
25 - 50mm / 1 - 2"	56.5	38	670
50 - 75mm / 2 - 3"	81.5	50	820
75 - 100mm / 3 - 4"	106.5	63	970

SPECIFICATIONS

Metric

Range	Graduation	Order No.	Indicating range
0 - 25mm	0.001mm	**510-121*** **510-141**	±0.060mm
25 - 50mm	0.001mm	**510-122**	±0.060mm
50 - 75mm	0.001mm	**510-123**	±0.060mm
75 - 100mm	0.001mm	**510-124**	±0.060mm

*Retractable anvil button on the right side.

Inch

Range	Graduation	Order No.	Indicating range
0 - 1"	.00005"	**510-131*** **510-151**	±.0023"
1 - 2"	.00005"	**510-132**	±.0023"
2 - 3"	.00005"	**510-133**	±.0023"
3 - 4"	.00005"	**510-134**	±.0023"

*Retractable anvil button on the right side.

Snap Meters

SERIES 523

FEATURES

- Various types of indicators, LVDTs and linear gages can be selected according to the measurement applications.
- Supplied in fitted plastic case.

Indicator is optional.



523-141

Technical Data

Flatness: 0.3µm / .000012″
Parallelism: 0.6µm / .000024″ for models up to 50mm / 2″
1µm / .00004″ for models over 50mm / 2″
Measuring force: 5 - 10N (500 - 1000gf)
Measuring faces: Carbide tipped

DIMENSIONS AND MASS

Unit: mm

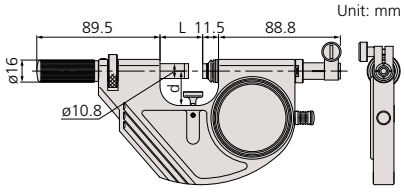

Range	d	L	Mass (g)
0 - 25mm / 0 - 1"	25	31	710
25 - 50mm / 1 - 2"	35	56	810
50 - 75mm / 2 - 3"	47.5	81	920
75 - 100mm / 3 - 4"	60	106	1050

SPECIFICATIONS

Metric Gage stem dia 8mm

Range	Order No.	Anvil movement
0 - 25mm	**523-141**	2mm
25 - 50mm	**523-142**	2mm
50 - 75mm	**523-143**	2mm
75 - 100mm	**523-144**	2mm

Inch Gage stem dia 3/8"

Range	Order No.	Anvil movement
0 - 1"	**523-151**	.078"
1 - 2"	**523-152**	.078"
2 - 3"	**523-153**	.078"
3 - 4"	**523-154**	.078"

Dial Snap Meters

SERIES 523

FEATURES

- Direct go/no-go judgment for mass-produced parts.
- Spindle diameter: .425" / 10.8mm
- IP protection level: 54
- Supplied in fitted plastic case.



523-131

IP54

Technical Data

Dial indication accuracy: .00005" / 1µm
Indication repeatability: .00002" / 0.4µm
Dial reading: .00005" or 0.001mm
Flatness: .000012" / 0.3µm
Parallelism: .000024" / 0.6µm for models up to 2"/ 50mm
.00004" / 1µm for models over 2" / 50mm
Measuring force: 5 - 10N (500 - 1000gf)
Measuring faces: Carbide tipped

SPECIFICATIONS

Metric

Range	Graduation	**Order No.**	Indicating range
0 - 25mm	0.001mm	**523-121**	±0.060mm
25 - 50mm	0.001mm	**523-122**	±0.060mm
50 - 75mm	0.001mm	**523-123**	±0.060mm
75 - 100mm	0.001mm	**523-124**	±0.060mm

Inch

Range	Graduation	**Order No.**	Indicating range
0 - 1"	.00005"	**523-131**	±.0023"
1 - 2"	.00005"	**523-132**	±.0023"
2 - 3"	.00005"	**523-133**	±.0023"
3 - 4"	.00005"	**523-134**	±.0023"

DIMENSIONS AND MASS

Unit: mm

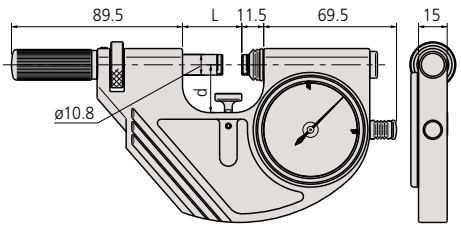

Range (Metric / Inch)	d	L	Mass (g)
0 - 1" / 0 - 25mm	25	31	710
1 - 2" / 25 - 50mm	35	56	810
2 - 3" / 50 - 75mm	47.5	81	920
3 - 4" / 75 - 100mm	60	106	1050

SPC

Technical Data

Accuracy: Refer to the list of specifications.
Resolution*: 0.001mm or .00005"/0.001mm
Graduation**: 0.01mm / .001"
Flatness: 0.3µm / .000012"
Parallelism: (3+R/75)µm, R=max. range (mm)
[.00012" + .00004" (L/8)]"
L = Max, range (inch)
Measuring faces: Carbide tipped
Display*: LCD
Battery*: SR44 (1 pc.), **938882**
Battery life*: Approx. 2.4 years under normal use
*Digital models **Analog models

Function of Digital Model

Origin-set, Zero-setting, Data hold, Data output, inch/mm conversion (on inch/metric models only)
Function lock
Alarm: Low voltage, Counting value composition error

Optional Accessories for Digital Model

05CZA662: SPC cable with data switch (1m / 40")
05CZA663: SPC cable with data switch (2m / 80")



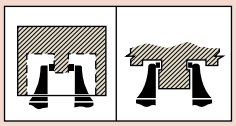

Caliper-type Micrometers

SERIES 343, 143

FEATURES

- With ratchet stop for constant force.
- With SPC output (Series 343).
- With a standard bar except 0 - 25mm and 0 - 1" model.
- Supplied in fitted plastic case.
- Non-slip grip finish (digital models).



143-121



343-250-30

SPECIFICATIONS

Metric Digital model

Range	Resolution	Order No.	Accuracy	Mass (g)
0 - 25mm	0.001mm	**343-250-30**	±5µm	630
25 - 50mm	0.001mm	**343-251-30**	±6µm	650
50 - 75mm	0.001mm	**343-252-30**	±7µm	1040
75 - 100mm	0.001mm	**343-253-30**	±8µm	1090

Inch / Metric Digital model

Range	Resolution	Order No.	Accuracy	Mass (g)
0 - 1" / 0 - 25.4mm	.00005" / 0.001mm	**343-350-30**	±.00025"	630
1 - 2" / 25.4 - 50.8mm	.00005" / 0.001mm	**343-351-30**	±.0003"	650
2 - 3" / 50.8 - 76.2mm	.00005" / 0.001mm	**343-352-30**	±.00035"	1040
3 - 4" / 76.2 - 101.6mm	.00005" / 0.001mm	**343-353-30**	±.0004"	1090

Metric

Range	Graduation	Order No.	Accuracy	Mass (g)
0 - 25mm	0.01mm	**143-101**	±5µm	210
25 - 50mm	0.01mm	**143-102**	±6µm	230
50 - 75mm	0.01mm	**143-103**	±7µm	280
75 - 100mm	0.01mm	**143-104**	±8µm	330
Models with a range up to 300mm are available.				

Inch

Range	Graduation	Order No.	Accuracy	Mass (g)
0 - 1"	.001"	**143-121**	±.00025"	210
1 - 2"	.001"	**143-122**	±.0003"	230
2 - 3"	.001"	**143-123**	±.00035"	280

DIMENSIONS

Unit = mm

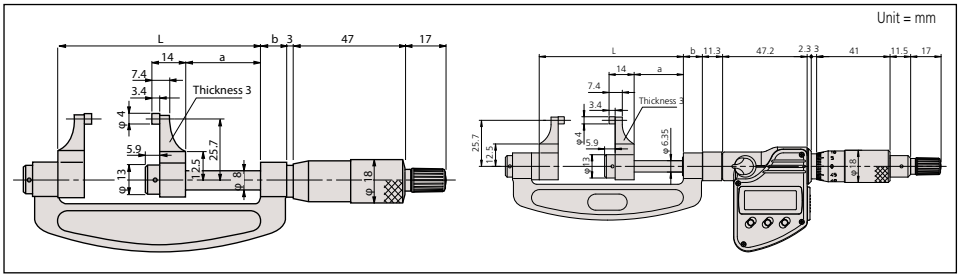

Mitutoyo

Groove Micrometers

SERIES 146

FEATURES

- Flanged spindle for measuring width, depth and location of grooves inside/ outside bores, and tubes.
- Provided with two types of graduations for inside and outside measurements.
- Non-rotating spindle type has two-directional ratchet stop. (Measuring force: 0.7 - 1.2N)

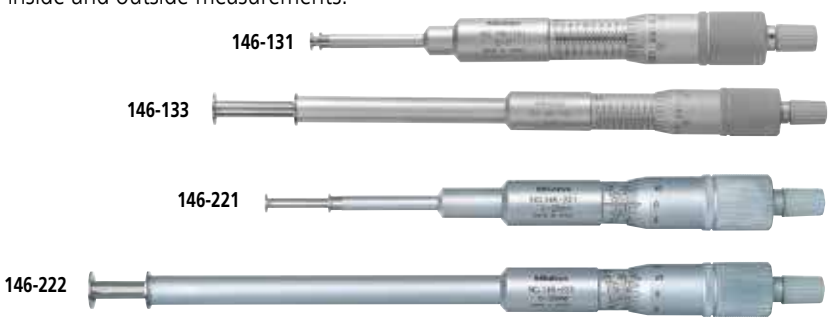

SPECIFICATIONS

Metric Rotating spindle type

Range Outside	Range Inside	Graduation	Order No.	Flange	Mass (g)
0 - 25mm	1.6 - 26.5mm	0.01mm	**146-121**	ø6.35mm	135
			146-122	ø12.7mm	185
25 - 50mm	26.5 - 51.5mm	0.01mm	**146-123**	ø12.7mm	175
50 - 75mm	51.5 - 76.5mm	0.01mm	**146-124**	ø12.7mm	165
75 - 100mm	76.5 - 101.5mm	0.01mm	**146-125**	ø12.7mm	160

Inch Rotating spindle type

Range Outside	Range Inside	Graduation	Order No.	Flange	Mass (g)
0 - 1"	.055" - 1.05"	.001"	**146-131**	ø.25"	135
			146-132	ø.5"	185
1" - 2"	1.05" - 2.05"	.001"	**146-133**	ø.5"	175
2" - 3"	2.05" - 3.05"	.001"	**146-134**	ø.5"	165
3" - 4"	3.05" - 4.05"	.001"	**146-135**	ø.5"	160

Metric Non-rotating spindle type

Range Outside	Range Inside	Graduation	Order No.	Flange	Mass (g)
0 - 25mm	1.6 - 26.5mm	0.01mm	**146-221**	ø6.35mm	135
			146-222	ø12.7mm	185
25 - 50mm	26.5 - 51.5mm	0.01mm	**146-223**	ø12.7mm	175
50 - 75mm	51.5 - 76.5mm	0.01mm	**146-224**	ø12.7mm	165
75 - 100mm	76.5 - 101.5mm	0.01mm	**146-225**	ø12.7mm	160

Inch Non-rotating spindle type

Range Outside	Range Inside	Graduation	Order No.	Flange	Mass (g)
0 - 1"	.055" - 1.05"	.001"	**146-231**	ø.25"	135
			146-232	ø.5"	185
1" - 2"	1.05" - 2.05"	.001"	**146-233**	ø.5"	175
2" - 3"	2.05" - 3.05"	.001"	**146-234**	ø.5"	165
3" - 4"	3.05" - 4.05"	.001"	**146-235**	ø.5"	160

DIMENSIONS

Unit: mm

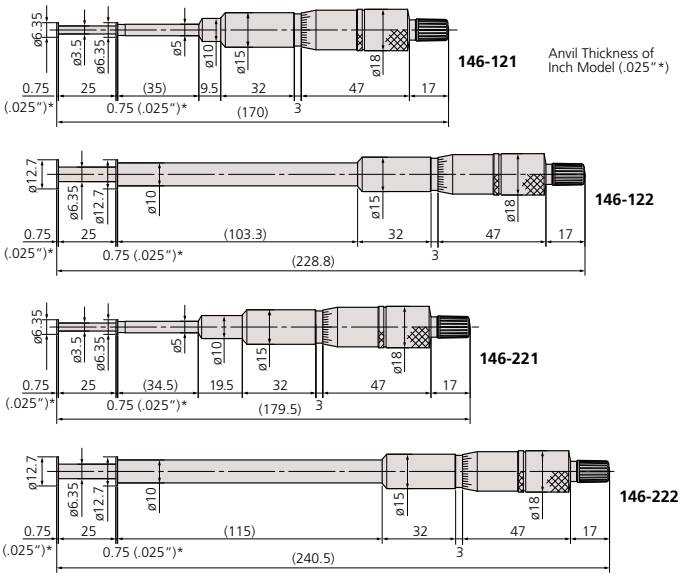

Technical Data

Accuracy: ± .0004" / ±10µm
Parallelism: .0004" / 10µm

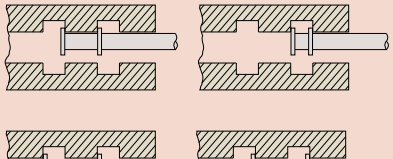



Small Hole Gage Set

SERIES 154

FEATURES

- Used with an outside micrometer for measuring inside diameter of bores.
- 4 sizes of gages are supplied in a fitted pouch.
- Extra long for gaging deep and shallow holes, slots and similar workpieces.
- Gaging surface is fully hardened to ensure long tool life.



154-901

DIMENSIONS

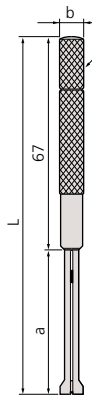

Unit: mm

Order No.	L	a	b
154-101 / 154 - 105	90	22.5	5.5
154-102 / 154 - 106	97.6	30	5.5
154-103 / 154 - 107	102.8	35	8.5
154-104 / 154 - 108	108	40	8.5

SPECIFICATIONS

Metric

Total range	Set Order No.	Assortment of gages
ø3 - 13mm (4-gage set)	**154-902**	ø3 - 5mm gage (**154-101**)
		ø5 - 7.5mm gage (**154-102**)
		ø7.5 - 10mm gage (**154-103**)
		ø10 - 13mm gage (**154-104**)

Inch

Total range	Set Order No.	Assortment of gages
.125 - .5" DIA. (4-gage set)	**154-901**	.125" - .2" DIA. gage (**154-105**)
		.2" - .3" DIA. gage (**154-106**)
		.3" - .4" DIA. gage (**154-107**)
		.4" - .5" DIA. gage (**154-108**)

Telescoping Gage Set

SERIES 155

FEATURES

- Spring-loaded plunger expands within the bore (or groove), allowing determination of the internal diameter (or groove width).
- With a knurled clamp.
- Supplied in a fitted pouch.



155-903

DIMENSIONS

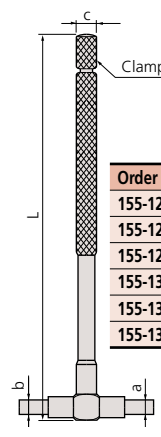

Unit: mm

Order No.	L	a	b	c
155-127 / 155 - 121	110	4	3	5
155-128 / 155 - 122	110	5	3.5	5.5
155-129 / 155 - 123	110	5	3.5	5.5
155-130 / 155 - 124	150	7.5	6	8
155-131 / 155 - 125	150	7.5	6	8
155-132 / 155 - 126	150	7.5	6	8

SPECIFICATIONS

Metric

Total range	Set Order No.	Included in set
8 - 150mm (6-gage set)	**155-905**	8 - 12.7mm gage (**155-127**)
		12.7 - 19mm gage (**155-128**)
		19 - 32mm gage (**155-129**)
		32 - 54mm gage (**155-130**)
		54 - 90mm gage (**155-131**)
		90 - 150mm gage (**155-132**)

Inch

Total range	Set Order No.	Included in set
.313 - 6" (6-gage set)	**155-903**	.313" - .5" gage (**155-121**)
		.5" - .75" gage (**155-122**)
		.75" - 1.25" gage (**155-123**)
		1.25" - 2.125" gage (**155-124**)
		2.125" - 3.5" gage (**155-125**)
		3.5" - 6" gage (**155-126**)
.50 - 6" (5-gage set)	**155-904**	**155-122, 155-123, 155-124, 155-125, 155-126**
.315 - 2.125" (4-gage set)	**155-907**	**155-121, 155-122, 155-123, 155-124**

Mitutoyo

Micrometer Stands

SERIES 156

These stands are designed to allow bench-top use with hand micrometers or other gages.

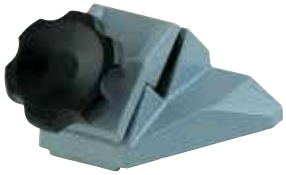

156-105-10



156-106



156-101-10



156-102









SPECIFICATIONS

Micrometer ranges	Order No.	Remarks
0-1″ / 0-25mm, 1-2″ / 25-50mm	**156-105-10**	Fixed angle type
Up to 4″ / 100mm	**156-101-10**	Adjustable angle type
5-12″ / 125-300mm	**156-102**	Vertical type
12-40″ / 300-1000mm	**156-103**	Vertical type
0-1″ / 0-25mm 1-2″ / 25-50mm	**156-106**	Fixed angle with platform

DIMENSIONS

Unit: mm

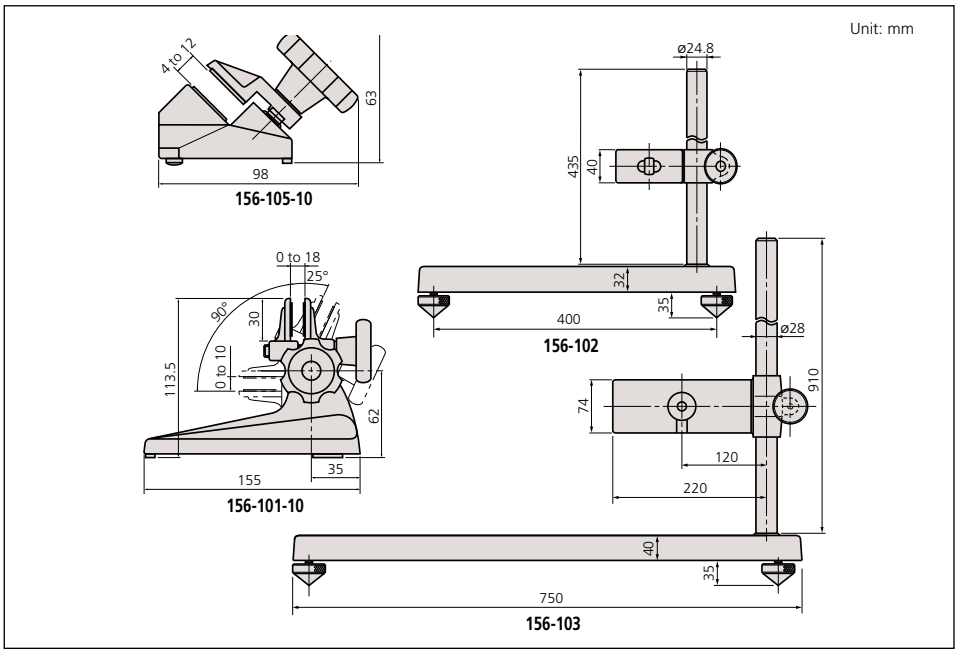

Color Ratchet & Color Speeder

Color ratchet



SPECIFICATIONS

Order No.	Color
985056	Black
985061	Red
985081	Blue
985071	Yellow
985076	Green
985066	Brown
04GZA241*	Gray
04GZA239**	Gray
04GZA243***	Gray

*for Series 293 digital model
** up to 300mm / 12"
** over 300mm / 12"

Color Speeder for Ratchet Thimble Micrometer



SPECIFICATIONS

Order No.	Color
04GAA899	Black
04GAA900	Red
04GAA901	Yellow
04GAA902	Green
04GAA903	Blue
04AAB208	Gray

Spindle Attachment Tip

Technical Data

Tip length: metric type: 10mm ±5µm
inch type: .5" ±.0002"

Spindle Dia: *1 .250" / 6.35mm
*1 Spindle diameter for 101469 (.250" ball) is .315"/ 8mm



To measure odd workpieces, several convenient anvil attachments are prepared by Mitutoyo. Among them the most often used one is the ball attachment.

The ball attachments are hardened steel balls with .200" and .250" diameters which are placed on the .250" and .315" diameter anvils, respectively, by rubber caps. With these attachments, regular micrometers can measure cylindrical wall thickness, but, .200" or .250" must be subtracted from the readings.

Other attachments shown here are either .500" or 10mm in length. The added amount must be subtracted from the reading.

Ball	Spline	Comparator	Blade	Knife-edge	Disk
					
101468 (.200" ball dia.) 101469 (.250" ball dia.)	208062* 208098	208063* 208099	208064* 208100	208065* 208101	208066* 208102

DIMENSIONS

Order No.	Dimension
208098 208062*	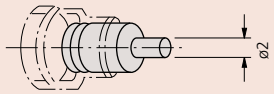
208099 208063*	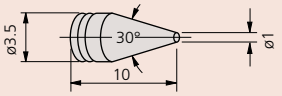
208100 208064*	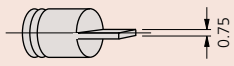

Order No.	Dimension
208101 208065*	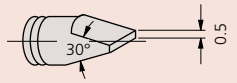
208102 208066*	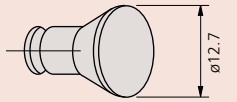

* metric type

Micrometer Oil



207000 (30ml)

Mitutoyo

Optical Parallels

SERIES 157

FEATURES

- Designed to inspect parallelism and flatness of measuring faces of micrometers.
- Each set consists of 4 thicknesses.
- Supplied in fitted wooden case.



SPECIFICATIONS

Metric

Range of micrometer to be checked	Order No.	Assortment of parallels (Thickness of parallel)
0-25mm	**157-903**	12.00mm (157-101) 12.12mm (157-102) 12.25mm (157-103) 12.37mm (157-104)
25-50mm	**157-904**	25.00mm (157-105) 25.12mm (157-106) 25.25mm (157-107) 25.37mm (157-108)

Inch

Range of micrometer to be checked	Order No.	Assortment of parallels (Thickness of parallel)
0-1"	**157-901**	.5000" (157-109) .5062" (157-110) .5125" (157-111) .5187" (157-112)
1-2"	**157-902**	1.0000" (157-113) 1.0062" (157-114) 1.0125" (157-115) 1.0187" (157-116)

Optical Flats

SERIES 158

FEATURES

- Used for inspecting the flatness of micrometer's or gage block's measuring faces with high accuracy.
- Supplied in fitted wooden case.



SPECIFICATIONS

Metric

Flatness	Order No.	Diameter/Thickness
0.2μm	**158-117**	45mm/12mm
	158-119	60mm/15mm
0.1μm	**158-118**	45mm/12mm
	158-120	60mm/15mm

Inch

Flatness	Order No.	Diameter/Thickness
.000004"	**158-122**	1.8"/.5"
	158-124	2.4"/.6"

Technical Data

Flatness: .000004" / 0.1μm
Parallelism: .000008" / 0.2μm
Diameter: 1.18" / 30mm

Parallelism check between measuring faces by means of interference fringe produced by an optical parallel.

The parallelism between the measuring faces can be determined as follows--place the optical parallel to the anvil and observe the number of interference fringes produced on the spindle side under the measuring force of the micrometers.
The parallelism is about 1μm (0.32μm x 3 = 0.96μm).
Fringe on the anvil side must not be more than one.

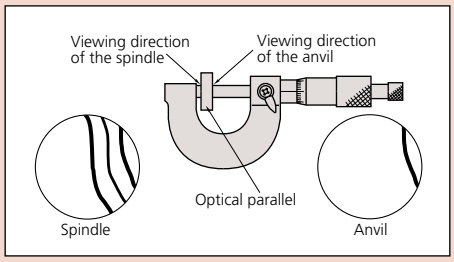



Flatness check of measuring faces using interference fringe pattern produced by an optical flat.

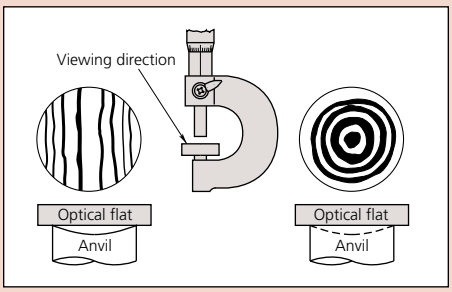

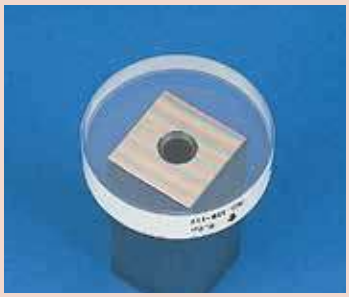

Micrometer Standards

SERIES 167

Technical Data

Flatness: 0.3µm / .000012″
Parallelism: 2µm / .00008″



FEATURES

- Used for the zero point setting of outside micrometers.
- Flat and lapped measuring faces.
- Heat insulating handle to prevent expansion due to body temperature.
- Supplied in fitted carton up to 500mm / 20″ and wooden case for over 525mm / 21″ length.



167-108

167-103

DIMENSION

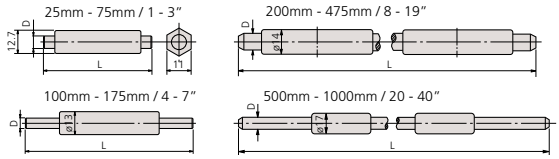

SPECIFICATIONS

Inch

Length (L)	Order No.	Diameter (D)	Accuracy
41″	**167-405**	.47″	.0004″
42″	**167-406**	.47″	.0004″
43″	**167-407**	.47″	.0004″
44″	**167-408**	.47″	.0004″
45″	**167-409**	.47″	.0004″
46″	**167-410**	.47″	.0004″
47″	**167-411**	.47″	.0004″
48″	**167-412**	.47″	.0004″
49″	**167-413**	.47″	.0004″
50″	**167-414**	.47″	.0004″
51″	**167-415**	.47″	.0004″
52″	**167-416**	.47″	.0004″
53″	**167-417**	.47″	.0004″
54″	**167-418**	.47″	.0004″
55″	**167-419**	.47″	.0004″
56″	**167-420**	.47″	.0004″
57″	**167-421**	.47″	.0004″
58″	**167-422**	.47″	.0004″
59″	**167-423**	.47″	.0004″
60″	**167-424**	.47″	.0004″
61″	**167-425**	.47″	.0004″
62″	**167-426**	.47″	.0004″
63″	**167-427**	.47″	.0004″
64″	**167-428**	.47″	.0004″
65″	**167-429**	.47″	.0004″
66″	**167-430**	.47″	.0004″
67″	**167-431**	.47″	.0004″
68″	**167-432**	.47″	.0004″
69″	**167-433**	.47″	.0004″
70″	**167-434**	.47″	.0004″
71″	**167-435**	.47″	.0004″
72″	**167-436**	.47″	.0004″
73″	**167-437**	.47″	.0004″
74″	**167-438**	.47″	.0004″
75″	**167-439**	.47″	.0004″
76″	**167-440**	.47″	.0004″
77″	**167-441**	.47″	.0004″
78″	**167-442**	.47″	.0004″
79″	**167-443**	.47″	.0004″

Micrometer Standards Set

Inch

Order No.	Size	Remarks
167-912*	1″-5″	5 pcs. Set (167-141, 142, 143, 144, 145)
167-913*	1″-11″	11 pcs. Set (167-141, 142, 143, 144,145, 146, 147, 148, 149, 150, 151)

Metric

Order No.	Size	Remarks
167-902*	25-125mm	5 pcs. Set (167-101, 102, 103, 104, 105)
167-903*	25-275mm	11 pcs. Set (167-101, 102, 103, 104, 105, 106, 107, 108, 109, 110, 111)

*Supplied with fitted carrying case

Metric

Length (L)	Order No.	Diameter (D)	Accuracy
25mm	**167-101**	6.35mm	±1.5µm
50mm	**167-102**	6.35mm	±2.0µm
75mm	**167-103**	6.35mm	±2.5µm
100mm	**167-104**	7.9mm	±3µm
125mm	**167-105**	7.9mm	±3.5µm
150mm	**167-106**	7.9mm	±4µm
175mm	**167-107**	7.9mm	±4.5µm
200mm	**167-108**	9.4mm	±5.0µm
225mm	**167-109**	9.4mm	±5.5µm
250mm	**167-110**	9.4mm	±6.0µm
275mm	**167-111**	9.4mm	±6.5µm
300mm	**167-112**	9.4mm	±7µm
325mm	**167-113**	9.4mm	±7.5µm
350mm	**167-114**	9.4mm	±8µm
375mm	**167-115**	9.4mm	±8.5µm
400mm	**167-116**	9.4mm	±9µm
425mm	**167-117**	9.4mm	±9.5µm
450mm	**167-118**	9.4mm	±1.0µm
475mm	**167-119**	9.4mm	±10.5µm
500mm	**167-120**	11.9mm	±11µm
525mm	**167-121**	11.9mm	±11.5µm
550mm	**167-122**	11.9mm	±12µm
575mm	**167-123**	11.9mm	±12.5µm
600mm	**167-124**	11.9mm	±13µm
625mm	**167-125**	11.9mm	±13.5µm
650mm	**167-126**	11.9mm	±14µm
675mm	**167-127**	11.9mm	±14.5µm
700mm	**167-128**	11.9mm	±15µm
725mm	**167-129**	11.9mm	±15.5µm
750mm	**167-130**	11.9mm	±16µm
775mm	**167-131**	11.9mm	±16.5µm
800mm	**167-132**	11.9mm	±17µm
825mm	**167-133**	11.9mm	±17.5µm
850mm	**167-134**	11.9mm	±18µm
875mm	**167-135**	11.9mm	±18.5µm
900mm	**167-136**	11.9mm	±19µm
925mm	**167-137**	11.9mm	±19.5µm
950mm	**167-138**	11.9mm	±20µm
975mm	**167-139**	11.9mm	±20.5µm
1000mm	**167-140**	11.9mm	±21µm

Inch

Length (L)	Order No.	Diameter (D)	Accuracy
1"	**167-141**	.25"	±.00005″
2"	**167-142**	.25"	±.0001″
3"	**167-143**	.25"	±.0001″
4"	**167-144**	.31"	±.0001″
5"	**167-145**	.31"	±.00015″
6"	**167-146**	.31"	±.00015″
7"	**167-147**	.31"	±.00015″
8"	**167-148**	.37"	±.00015″
9"	**167-149**	.37"	±.0002″
10"	**167-150**	.37"	±.0002″
11"	**167-151**	.37"	±.0002″
12"	**167-152**	.37"	±.00025″
13"	**167-153**	.37"	±.00025″
14"	**167-154**	.37"	±.00025″
15"	**167-155**	.37"	±.00025″
16"	**167-156**	.37"	±.00025″
17"	**167-157**	.37"	±.00025″
18"	**167-158**	.37"	±.00025″
19"	**167-159**	.37"	±.0003″
20"	**167-160**	.47"	±.0003″
21"	**167-161**	.47"	±.0003″
22"	**167-162**	.47"	±.0003″
23"	**167-163**	.47"	±.0003″
24"	**167-164**	.47"	±.0003″
25"	**167-165**	.47"	±.00035″
26"	**167-166**	.47"	±.00035″
27"	**167-167**	.47"	±.00035″
28"	**167-168**	.47"	±.00035″
29"	**167-169**	.47"	±.00035″
30"	**167-170**	.47"	±.00035″
31"	**167-171**	.47"	±.00035″
32"	**167-172**	.47"	±.00035″
33"	**167-173**	.47"	±.00035″
34"	**167-174**	.47"	±.00035″
35"	**167-175**	.47"	±.00035″
36"	**167-176**	.47"	±.00035″
37"	**167-177**	.47"	±.0004″
38"	**167-178**	.47"	±.0004″
39"	**167-179**	.47"	±.0004″
40"	**167-180**	.47"	±.0004″

Mitutoyo

Standards for Screw Thread Micrometers

SERIES 167 — 60 degree and 55 degree

FEATURES

- Specially designed for the zero point setting of screw thread micrometers.
- Supplied in fitted carton.



167-264 (60°)



167-262 (60°)

SPECIFICATIONS

Metric

Length	Order No.	Thread angle	Accuracy
25mm	**167-261**	60°	±4μm
	167-272	55°	±4μm
50mm	**167-262**	60°	±5μm
	167-273	55°	±5μm
75mm	**167-263**	60°	±6μm
	167-274	55°	±6μm
100mm	**167-264**	60°	±7μm
	167-275	55°	±7μm
125mm	**167-265**	60°	±8μm
	167-276		±8μm
150mm	**167-266**	60°	±9μm
	167-277		±9μm
175mm	**167-267**	60°	±10μm
	167-278		±10μm
200mm	**167-268**	60°	±11μm
	167-279		±11μm
225mm	**167-269**	60°	±12μm
	167-280		±12μm
250mm	**167-270**	60°	±13μm
	167-281		±13μm
275mm	**167-271**	60°	±14μm
	167-282		±14μm

Inch

Length	Order No.	Thread angle	Accuracy
1"	**167-294**	60°	±.00015"
	167-283	55°	±.00015"
2"	**167-295**	60°	±.0002"
	167-284	55°	±.0002"
3"	**167-296**	60°	±.00025"
	167-285	55°	±.00025"
4"	**167-297**	60°	±.0003"
	167-286	55°	±.0003"
5"	**167-298**	60°	±.00035"
	167-287	55°	±.00035"
6"	**167-299**	60°	±.0004"
	167-288	55°	±.0004"

Technical Data

Thread angle: 55° or 60°
Angle Accuracy: ±2°

Standards for V-Anvil Micrometers

SERIES 167

FEATURES

- Specially designed for the zero point setting of V-anvil micrometers.
- Supplied in fitted carton.



167-329

SPECIFICATIONS

Metric

Diameter	Order No.	Type	Accuracy
5mm	**167-327**	Plug	±2μm
10mm	**167-328**	Plug	±2μm
25mm	**167-329**	Plug	±2μm
40mm	**167-330**	Ring	±3μm
55mm	**167-331**	Ring	±3μm
70mm	**167-332**	Ring	±3μm
85mm	**167-333**	Ring	±3μm

Inch

Diameter	Order No.	Type	Accuracy
.2"	**167-337**	Plug	±.0001"
.4"	**167-338**	Plug	±.0001"
1"	**167-339**	Plug	±.0001"
1.6"	**167-340**	Ring	±.00015"
2.2"	**167-341**	Ring	±.00015"
2.8"	**167-342**	Ring	±.00015"
3.4"	**167-343**	Ring	±.00015"

Tool Kits

The Digimatic Tool Kits include Mitutoyo's highly popular 0–1″ / 0–25mm Digimatic Micrometer (choose ratchet or friction type) and 0–6″ / 0–150mm Digimatic Caliper with Absolute Encoder. The case is made of handsome, solid mahogany and has space for gage batteries. The micrometer spanner is a supplied accessory.

Order No. 64PKA068A (Inch Tool Kit)	
Item No.	**Description**
103-135	Outside Micrometer (Friction Thimble Type) (Range: 0–1″, Graduation: .0001″)
505-742	Dial Caliper (Range: 0–6″, Dial Graduation: .001″)
182-204	6″ Full-Flexible Rule (3R)
64PPP932	Mahogany Case



64PKA068A

Order No. 64PKA069A (Inch Tool Kit)	
Item No.	**Description**
103-135	Outside Micrometer (Friction Thimble Type) (Range: 0–1″, Graduation: .0001″)
182-202	6″ Full-Flexible Rule (16R)
513-518T	Test Indicator Set (Range: .04″, Graduation: .001″)
505-742	675 Dial Caliper (Range: 0–6″, Dial Graduation: .001″)
050501	Mahogany Case

The basic measuring instruments recommended for vocational students and machinist apprentices are supplied in this kit.



64PKA069A

Order No. 64PKA070A (Inch Tool Kit)	
Item No.	**Description**
101-117	Outside Micrometer (Friction Thimble Type) (Range: 0–1″, Graduation: .0001″)
129-132	Depth Micrometer (with 6 pcs rods) (Range: 0–6″, Graduation: .001″)
182-202	Full-Flexible Rule (16R)
505-742	Dial Caliper (Range: 0–6″, Graduation: .001″)
050503	Mahogany Case

For operations where depth measurements are a primary concern, this kit is ideal for measuring depths to 6″, in addition to providing the tools for regular precision measurements.



64PKA070A

Order No. 64PKA071B (Inch Tool Kit)	
Item No.	**Description**
103-922	Outside Micrometer Set (3 pcs) (Range: 0–3″, Graduation: .0001″)
141-208	Inside Micrometer (with 6 pcs rods)
180-905B	Combination Set (4R)
182-202	Full-Flexible Rule (16R)
513-518T	Test Indicator Set (Range: .04″, Graduation: .001″)
505-742	Dial Caliper (Range: 0–6″, Dial Graduation: .001″)
2416S	Dial Indicator (Range: 1.0″, Graduation: .001″)
7010S	Magnetic Stand
050504	Mahogany Case

Most every routine inspection assignment can be completed with the eight high-quality Mitutoyo precision measuring instruments provided in this deluxe kit.



64PKA071B

Mitutoyo

Tool Kits



64PKA080B

Order No. 64PKA080B (Inch Tool Kit)	
Item No.	**Description**
182-102	6" Steel Rule (16R)
103-177	Micrometer (Ratchet Thimble) (Range 0-1", Graduation .001")
505-740	Dial Caliper (Range: 0–6", Dial Graduation: .001")
64PPP932	Mahogany Case



64PKA073B

Order No. 64PKA073B (Tool Kit Lite)	
Item No.	**Description**
182-102	6" Steel Rule (16R)
700-113-10	0 - 6" / 0 - 150mm MyCal Lite (Resolution: .001" / 0.1mm)
293-831-30	0 - 1" / 0 - 25.4mm MDC Lite (Ratchet Stop) (Resolution: .00005" / 0.001mm)
64PPP932	Mahogany Case



64PKA076B

Order No. 64PKA076B (Digimatic Tool Kit)	
Item No.	**Description**
293-340-30	Digimatic Micrometer (Ratchet Stop Type) (Range: 0 - 1" / 0 - 25.4mm, LCD Resolution: .00005" / 0.001mm)
500-196-30	Digimatic Caliper with Absolute Encoder (Range: 0 - 6" / 0 - 150mm, LCD Resolution: .0005" / 0.001mm)
64PPP932	Mahogany Case



64PKA077B

Order No.64PKA077B (Digimatic Tool Kit)	
Item No.	**Description**
293-348-30	Digimatic Micrometer (Friction Thimble Type) (Range: 0 - 1" / 0 - 25.4mm, LCD Resolution: .00005" / 0.001mm)
500-196-30	Digimatic Caliper with Absolute Encoder (Range: 0 - 6" / 0 - 150mm, LCD Resolution: .0005" / 0.001mm)
64PPP932	Mahogany Case

Micrometer Head Selection Guide

The table below provides an outline of Mitutoyo micrometer heads for each series so you can locate the pages to refer to select the micrometer head most appropriate to your specific application. When selecting consider the following points:

- Dimensions
- Graduation/resolution and accuracy
- With or without spindle lock
- With or without clamping nut
- Normal or reverse reading
- With or without ratchet stop

Variety of Specifications

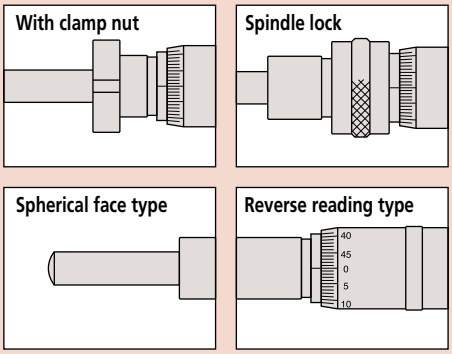

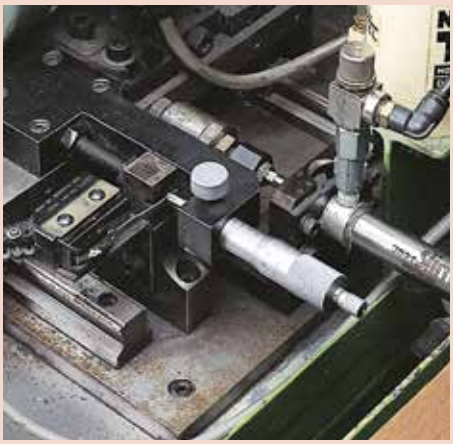

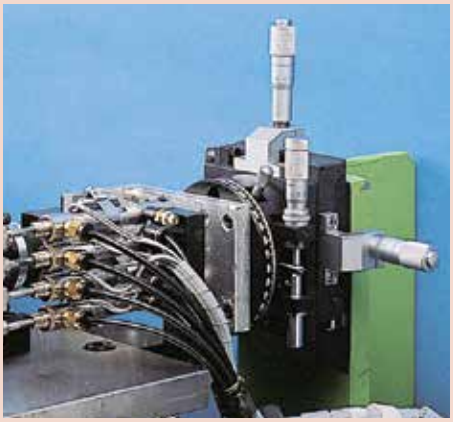

SELECTION TABLE

Range	Series	Remarks	Page
0 - 1mm	110	Differential screw translator (extra-fine feeding) type	B-69
0 - 2.5mm	110	Differential screw translator (extra-fine feeding) type	B-69
0 - 5mm	148	Ultra-small type	B-60
0 - 6.5mm	148	Fine spindle feeding of 0.1mm/rev.	B-58
	148	Fine spindle feeding of 0.25mm/rev.	B-59
	148	Small type	B-60
	148	Large thimble diameter for easy reading	B-61
0 - 10mm	152	Fine-feeding type	B-68
0 - 13mm	148	Common type in small size	B-62
	148	Spindle feeding of 0.25mm/rev.	B-59
	148	Zero-adjustable thimble type	B-63
	148	Large thimble diameter for easy reading	B-61
	110	Differential screw translator (extra-fine feeding) type	B-69
0 - 15mm	149	with carbide-tipped spindle type	B-64
	153	Non-rotating spindle type	B-67
	152	Quick spindle feeding of 1mm/rev.	B-68
0 - 25mm	350	Compact digital type	B-57
	150	Common type in middle size	B-65
	153	Non-rotating spindle type	B-67
	153	Fine graduation type	B-71
	151	Heavy-duty type (ø8mm spindle)	B-66
	152	Quick spindle feeding of 1mm/rev.	B-68
	152	Fine feeding type	B-68
	152	for XY-stage	B-70
	250	with digit counter type	B-73
0 - 50mm	164	Digital type	B-56
	151	Heavy-duty type (ø8mm spindle)	B-66
	152	Quick spindle feeding of 1mm/rev.	B-68
	152	Fine-feeding type	B-68
	197	Non-rotating spindle and large thimble	B-71

Digimatic Micrometer Heads

SERIES 164

FEATURES

- The display can be rotated up to 330˚ for easy reading in any position.
- Non-rotating spindle imparts no torque on the workpiece.



164-164

SPECIFICATIONS

Metric

Range	Order No.	Accuracy	Mass (g)
0 - 50mm	**164-163**	±3µm	490

Inch/Metric

Range	Order No.	Accuracy	Mass (g)
0 - 2" / 0 - 50.8mm	**164-164**	±.00015"	490

DIMENSIONS

Unit: mm

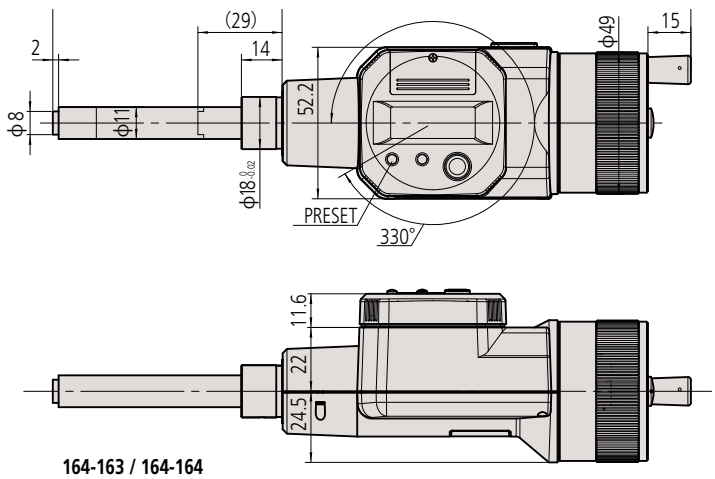

164-163 / 164-164

Technical Data

Accuracy: Refer to the list of specifications.

Resolution: 0.001mm or .00005"/0.001mm
Display: LCD
Battery: SR44 (2 pcs.), **938882**
Battery life: 1.8 years

Function

Zero-setting, Data hold, Data output, Preset, inch/mm conversion (on inch/metric models only)
Alarm: Low voltage, Counting value composition error

Optional Accessories

959149: SPC cable (1m / 40")
959150: SPC cable (2m / 80")

Digimatic Micrometer Heads

SERIES 350

Measuring force: 5 - 10N

Non-rotating device

350-261-30, 350-361-30

The non-rotating device provides no radial torsion on the workpiece surface so that workpiece wear and deformation are minimized.

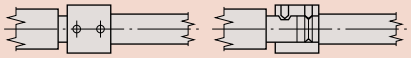

Technical Data

Accuracy* ±2µm Metric model
± .0001" Inch / Metric model

Resolution: 0.001mm or .00005"/0.001mm
Display: LCD
Battery: SR44 (1 pc) **938882**
Battery life: Approx. 2.4 years under normal use
Dust/Water protection level: IP65
350-281-30, 350-282-30, 350-283-30, 350-284-30, 350-261-30
350-381-30, 350-382-30, 350-383-30, 350-384-30, 350-361-30

Function

Preset, inch/mm conversion (on inch/metric models only)
Function Lock, 2 Presets
Alarm: Low voltage, Counting value composition error

Optional Accessories

05CZA662: SPC cable with data switch (1m / 40")
05CZA663: SPC cable with data switch (2m / 80")

FEATURES

- Equipped with digital display and output.
- 350 series IP65 models: the Digimatic output port enables inclusion in a statistical process control or networked measurement system.



350-251-30



350-281-30

SPECIFICATIONS

Metric

Range	Order No.	Stem	Spindle face	Stem dia.	Remarks
0 - 25mm	**350-251-30**	Plain	Flat (carbide tip)	10mm	
0 - 25mm	**350-252-30**	w/ clamp nut	Flat (carbide tip)	10mm	
0 - 25mm	**350-253-30**	Plain	Spherical (SR4)	10mm	
0 - 25mm	**350-254-30**	w/ clamp nut	Spherical (SR4)	10mm	
0 - 25mm	**350-281-30**	Plain	Flat (carbide tip)	12mm	IP65
0 - 25mm	**350-282-30**	w/ clamp nut	Flat (carbide tip)	12mm	IP65
0 - 25mm	**350-283-30**	Plain	Spherical (SR4)	12mm	IP65
0 - 25mm	**350-284-30**	w/ clamp nut	Spherical (SR4)	12mm	IP65
0 - 25mm	**350-261-30***	Plain	Flat	12mm	IP65

*with non-rotating device and 18mm stem bushing.

Inch/Metric

Range	Order No.	Stem	Spindle face	Stem dia.	Remarks
0 - 1" / 0 -25.4mm	**350-351-30**	Plain	Flat (carbide tip)	.375"	
0 - 1" / 0 -25.4mm	**350-352-30**	w/ clamp nut	Flat (carbide tip)	.375"	
0 - 1" / 0 -25.4mm	**350-353-30**	Plain	Spherical (SR4)	.375"	
0 - 1" / 0 -25.4mm	**350-354-30**	w/ clamp nut	Spherical (SR4)	.375"	
0 - 1" / 0 -25.4mm	**350-381-30**	Plain	Flat (carbide tip)	.5"	IP65
0 - 1" / 0 -25.4mm	**350-382-30**	w/ clamp nut	Flat (carbide tip)	.5"	IP65
0 - 1" / 0 -25.4mm	**350-383-30**	Plain	Spherical (SR4)	.5"	IP65
0 - 1" / 0 -25.4mm	**350-384-30**	w/ clamp nut	Spherical (SR4)	.5"	IP65
0 - 1" / 0 -25.4mm	**350-361-30***	Plain	Flat	.5"	IP65

*with non-rotating device and 18mm stem bushing.

DIMENSIONS AND MASS

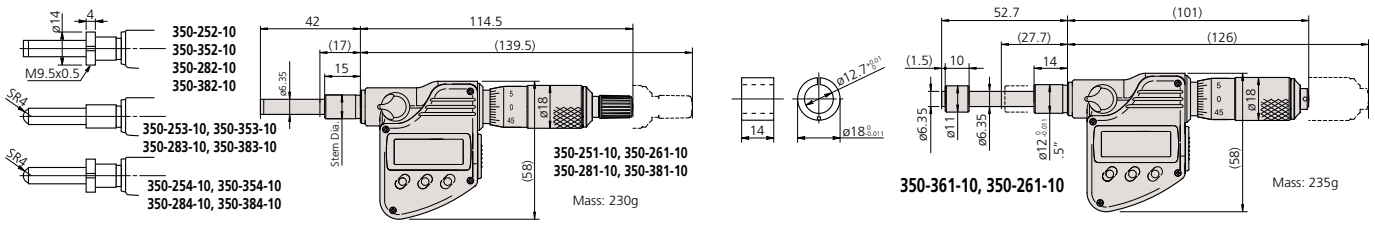

Micrometer Heads

SERIES 148 — Fine Spindle Feeding of 0.1mm/rev

FEATURES

- Fine spindle feeding of just 0.1mm/rev for extra-fine adjustment and positioning.
- External dimensions are compatible with conventional 0.5mm pitch heads.

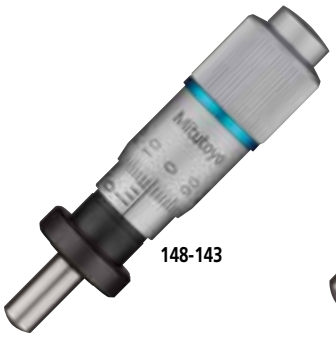
148-143

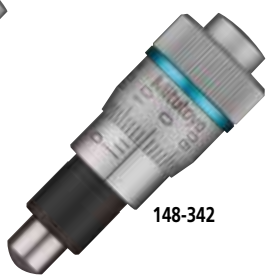
148-342


148-243

SPECIFICATIONS

Metric

Range	Order No.	Accuracy	Stem dia.	Stem	Spindle face	Remarks
0 - 6.5mm	**148-142**	±2µm	9.5mm	Plain	Spherical (SR4)	—
0 - 6.5mm	**148-143**	±2µm	9.5mm	w/clamp nut	Spherical (SR4)	—
0 - 6.5mm	**148-342**	±2µm	9.5mm	Plain	Spherical (SR4)	Thicker & shorter thimble
0 - 6.5mm	**148-343**	±2µm	9.5mm	w/clamp nut	Spherical (SR4)	Thicker & shorter thimble
0 - 6.5mm	**148-242**	±5µm	6mm	Plain	Spherical (SR3)	Small thimble diameter
0 - 6.5mm	**148-243**	±5µm	6mm	w/clamp nut	Spherical (SR3)	Small thimble diameter

DIMENSIONS AND MASS

Unit: mm

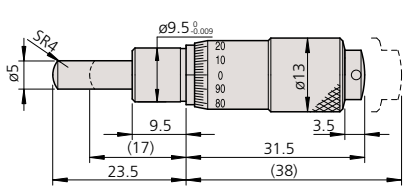

148-142 Mass: 31g

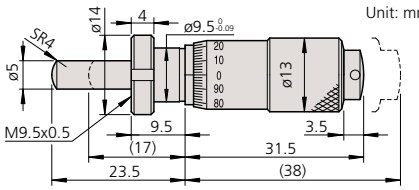

148-143 Mass: 34g

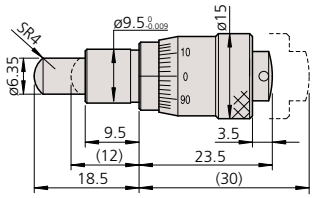

148-342 Mass: 29g

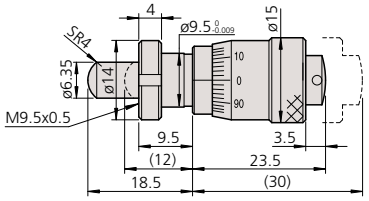

148-343 Mass: 31g

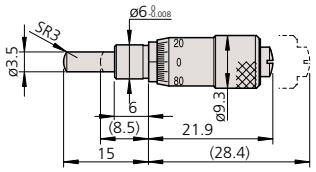

148-242 Mass: 10g

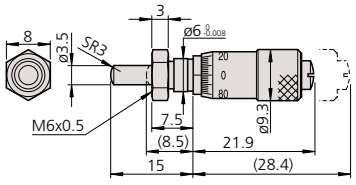

148-243 Mass: 10g

( ): when retracting the spindle until its stroke end.

Technical Data

Graduations: 0.002mm
Spindle pitch: 0.1mm
Spindle face: Spherical of SKS3 (more than HRC60), lapped surface
Scale surface: Hard-chrome plating
Fixture thickness for clamp nut: 6mm (**148-243**: 4mm)

Spindle pitch

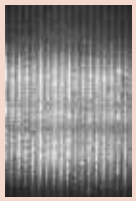
Screw Thread pitch= 0.1mm

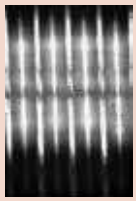
Screw Thread pitch= 0.5mm

Applications

Semiconductor wafer positioning machinery and optical component alignment units, etc.

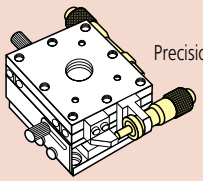
Precision X-Y table positioning

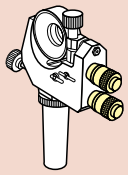
Precision adjustment of mirror in holder

Comparison of mounting dimensions between a standard fine-pitch head and a standard conventional pitch head at the mid-range travel position.

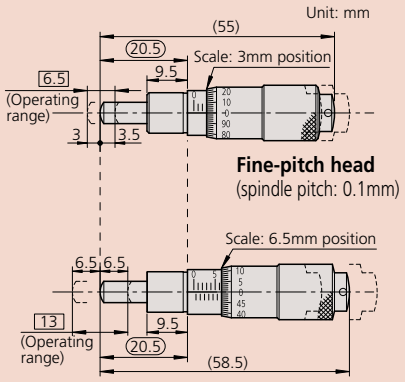

While the fine-pitch micrometer head has a measuring range of 6.5mm, the conventional head has a larger range of 13mm. When replacing a conventional head, the fine-pitch type can use the common range in the middle of the spindle travel. The standard and compact types of fine-pitch head are completely interchangeable.

Micrometer Heads

SERIES 148 — Fine Spindle Feeding of 0.25 mm / rev

Technical Data

Graduations: 0.01mm
Spindle pitch: 0.25mm
Spindle face: Spherical of SKS3 (more than HRC60), lapped surface
Scale surface: Hard-chrome plating
Fixture thickness for clamp nut: 6mm

FEATURES

- Fine spindle feeding of just 0.25mm/rev for fine adjustment and positioning.



148-132

SPECIFICATIONS

Metric

Range	Order No.	Accuracy	Stem dia.	Stem	Spindle face
0 - 13mm	**148-132**	2µm	9.5mm	Plain	Spherical (SR4)
0 - 13mm	**148-133**	2µm	9.5mm	w/clamp nut	Spherical (SR4)
0 - 6.5mm	**148-322**	2µm	9.5mm	Plain	Spherical (SR4)
0 - 6.5mm	**148-323**	2µm	9.5mm	w/ clamp nut	Spherical (SR4)

DIMENSIONS AND MASS

Unit: mm

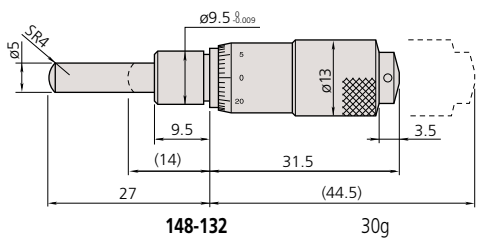

148-132 30g

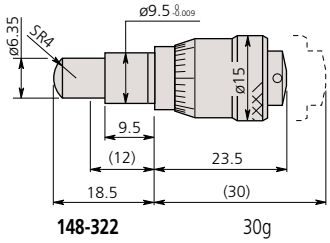

148-322 30g

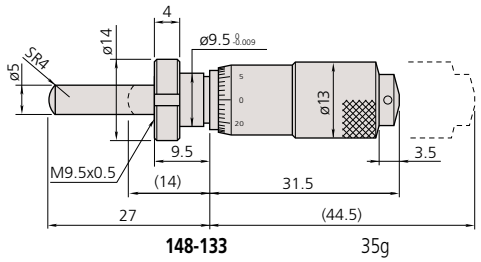

148-133 35g

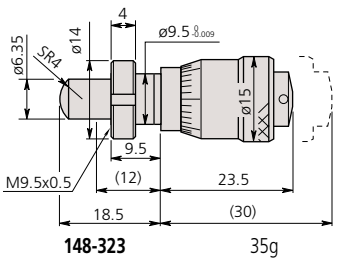

148-323 35g

( ): when retracting the spindle until its stroke end.

Mitutoyo

Micrometer Heads

SERIES 148 — Ultra-Small/Small Type

FEATURES

- Miniature micrometer heads for ease of incorporating into machines.



148-215



148-201



148-203

Technical Data

Graduations: 0.02mm (**148-215**, **148-216**), 0.01mm or .001"
Spindle pitch: 0.5mm
Spindle face: Flat or spherical of SKS3 (more than HRC60), lapped surface
Scale surface: Hard-chrome plating
Fixture thickness for clamp nut: 3mm (**148-216**, **148-218**), 4mm



Shown actual size

SPECIFICATIONS

Metric

Range	Order No.	Accuracy	Stem dia.	Stem	Spindle face	Remarks
0 - 5mm	**148-215**	±5µm	3.5mm	Plain	Spherical (SR1.5)	—
0 - 5mm	**148-216**	±5µm	3.5mm	w/clamp nut	Spherical (SR1.5)	—
0 - 6.5mm	**148-201**	±5µm	6mm	Plain	Flat	—
0 - 6.5mm	**148-203**	±5µm	6mm	w/clamp nut	Flat	—
0 - 6.5mm	**148-205**	±5µm	6mm	Plain	Spherical (SR3)	—
0 - 6.5mm	**148-207**	±5µm	6mm	w/clamp nut	Spherical (SR3)	—
6.5 - 0 mm	**148-209**	±5µm	6mm	Plain	Flat	Reverse reading
6.5 - 0 mm	**148-211**	±5µm	6mm	w/ clamp nut	Flat	Reverse reading

Inch

Range	Order No.	Accuracy	Stem dia.	Stem	Spindle face	Remarks
0 - .2"	**148-217**	±5µm	.156"	Plain	Spherical (SR1.5)	—
0 - .2"	**148-218**	±5µm	.156"	w/clamp nut	Spherical (SR1.5)	—
0 -.25"	**148-202**	±5µm	.25"	Plain	Flat	—
0 -.25"	**148-204**	±5µm	.25"	w/clamp nut	Flat	—
0 -.25"	**148-206**	±5µm	.25"	Plain	Spherical (SR3)	—
0 -.25"	**148-208**	±5µm	.25"	w/clamp nut	Spherical (SR3)	—
.25 - 0"	**148-210**	±5µm	.25"	Plain	Flat	Reverse reading
.25 - 0"	**148-212**	±5µm	.25"	w/ clamp nut	Flat	Reverse reading

DIMENSIONS AND MASS

Unit: mm

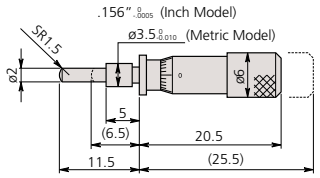

148-215 / 148-217 Mass: 4g

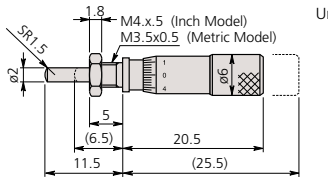

148-216 / 148-218 Mass: 4g

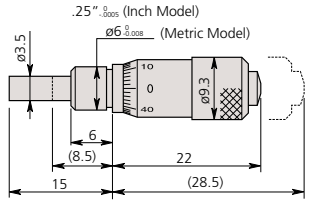

148-201 / 148-202 Mass: 10g

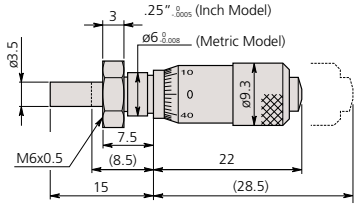

148-203 / 148-204 Mass: 10g

( ): when retracting the spindle until its stroke end.

Micrometer Heads

SERIES 148 — Large Thimble Diameter for Easy Reading


148-301


148-303


148-305

FEATURES

- Easy reading due to the large thimble diameter. (Three types of thimble diameters can be selected.)

SPECIFICATIONS

Metric

Range	Order No.	Accuracy	Stem dia.	Stem	Spindle face	Thimble Dia.
0 - 6.5mm	**148-301**	±2µm	9.5mm	Plain	Flat	15mm
0 - 6.5mm	**148-302**	±2µm	9.5mm	w/clamp nut	Flat	15mm
0 - 6.5mm	**148-303**	±2µm	9.5mm	Plain	Flat	20mm
0 - 6.5mm	**148-304**	±2µm	9.5mm	w/clamp nut	Flat	20mm
0 - 6.5mm	**148-305**	±2µm	9.5mm	Plain	Flat	29mm
0 - 6.5mm	**148-306**	±2µm	9.5mm	w/clamp nut	Flat	29mm
0 - 13mm	**148-307**	±2µm	9.5mm	Plain	Flat	15mm
0 - 13mm	**148-308**	±2µm	9.5mm	w/clamp nut	Flat	15mm
0 - 13mm	**148-309**	±2µm	9.5mm	Plain	Flat	20mm
0 - 13mm	**148-310**	±2µm	9.5mm	w/clamp nut	Flat	20mm
0 - 13mm	**148-311**	±2µm	9.5mm	Plain	Flat	29mm
0 - 13mm	**148-312**	±2µm	9.5mm	w/ clamp nut	Flat	29mm

Inch

Range	Order No.	Accuracy	Stem dia.	Stem	Spindle face	Thimble Dia.
0 - .25"	**148-351**	±.0001"	.375"	Plain	Flat	.59"
0 - .25"	**148-352**	±.0001"	.375"	w/clamp nut	Flat	.59"
0 - .25"	**148-353**	±.0001"	.375"	Plain	Flat	.79"
0 - .25"	**148-354**	±.0001"	.375"	w/clamp nut	Flat	.79"
0 - .25"	**148-355**	±.0001"	.375"	Plain	Flat	1.14"
0 - .25"	**148-356**	±.0001"	.375"	w/clamp nut	Flat	1.14"
0 - .5"	**148-357**	±.0001"	.375"	Plain	Flat	.59"
0 - .5"	**148-358**	±.0001"	.375"	w/clamp nut	Flat	.59"
0 - .5"	**148-359**	±.0001"	.375"	Plain	Flat	.79"
0 - .5"	**148-360**	±.0001"	.375"	w/clamp nut	Flat	.79"
0 - .5"	**148-361**	±.0001"	.375"	Plain	Flat	1.14"
0 - .5"	**148-362**	±.0001"	.375"	w/ clamp nut	Flat	1.14"

DIMENSIONS AND MASS

Unit: mm

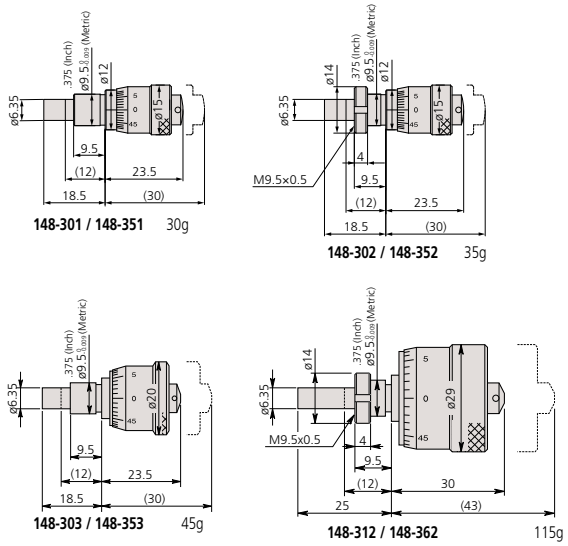

( ): when retracting the spindle until its stroke end.

Technical Data

Graduations: 0.01mm or .001"
Spindle pitch: 0.5mm or .025"
Spindle face: Flat of SKS3 (more than HRC60), lapped surface
Scale surface: Hard-chrome plating
Fixture thickness for clamp nut: 6mm

Mitutoyo

Micrometer Heads

SERIES 148 — Common Type in Small Size

SPECIFICATIONS

Metric

Range	Order No.	Accuracy	Stem dia.	Stem	Spindle face	Remarks
0 - 13mm	**148-104**	±2µm	9.5mm	Plain	Flat	—
0 - 13mm	**148-103**	±2µm	9.5mm	w/clamp nut	Flat	—
0 - 13mm	**148-121**	±2µm	9.5mm	Plain*	Flat	—
0 - 13mm	**148-120**	±2µm	9.5mm	w/clamp nut*	Flat	—
0 - 13mm	**148-801**	±2µm	9.5mm	Plain	Spherical (SR4)	—
0 - 13mm	**148-802**	±2µm	9.5mm	w/clamp nut	Spherical (SR4)	—
0 - 13mm	**148-803**	±2µm	9.5mm	Plain*	Spherical (SR4)	—
0 - 13mm	**148-804**	±2µm	9.5mm	w/clamp nut*	Spherical (SR4)	—
13mm - 0	**148-821**	±2µm	9.5mm	Plain	Flat	Reverse reading
13mm - 0	**148-822**	±2µm	9.5mm	w/clamp nut	Flat	Reverse reading
13mm - 0	**148-823**	±2µm	9.5mm	Plain*	Flat	Reverse reading
13mm - 0	**148-824**	±2µm	9.5mm	w/ clamp nut*	Flat	Reverse reading

*with spindle lock

Inch

Range	Order No.	Accuracy	Stem dia.	Stem	Spindle face	Remarks
0 - .5"	**148-112**	±.0001"	.375"	Plain	Flat	—
0 - .5"	**148-111**	±.0001"	.375"	w/clamp nut	Flat	—
0 - .5"	**148-123**	±.0001"	.375"	Plain*	Flat	—
0 - .5"	**148-122**	±.0001"	.375"	w/clamp nut*	Flat	—
0 - .5"	**148-811**	±.0001"	.375"	Plain	Spherical (SR4)	—
0 - .5"	**148-812**	±.0001"	.375"	w/clamp nut	Spherical (SR4)	—
0 - .5"	**148-813**	±.0001"	.375"	Plain*	Spherical (SR4)	—
0 - .5"	**148-814**	±.0001"	.375"	w/clamp nut*	Spherical (SR4)	—
.5" - 0	**148-831**	±.0001"	.375"	Plain	Flat	Reverse reading
.5" - 0	**148-832**	±.0001"	.375"	w/clamp nut	Flat	Reverse reading
.5" - 0	**148-833**	±.0001"	.375"	Plain*	Flat	Reverse reading
.5" - 0	**148-834**	±.0001"	.375"	w/ clamp nut*	Flat	Reverse reading

*with spindle lock

DIMENSIONS AND MASS

Unit: mm

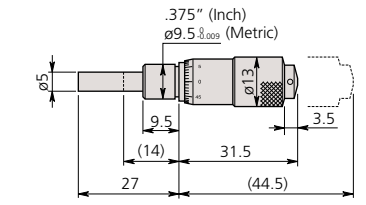

148-104 / 148-112 30g

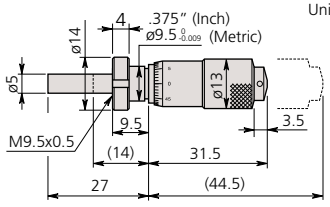

148-103 / 148-111 35g

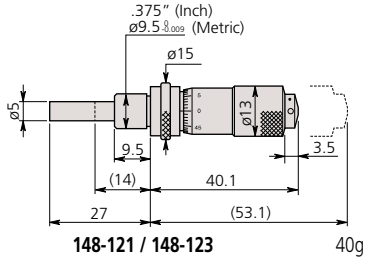

148-121 / 148-123 40g

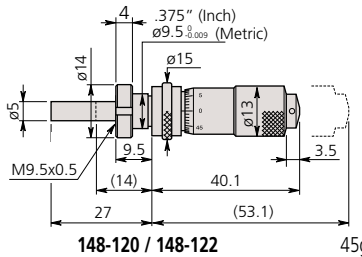

148-120 / 148-122 45g

( ): when retracting the spindle until its stroke end.









Technical Data

Graduations: 0.01mm or .001"
Spindle pitch: 0.5mm
Spindle face: Flat or spherical of SKS3 (more than HR60), lapped surface
Scale surface: Hard-chrome plating
Fixture thickness for clamp nut: 6mm

Micrometer Heads

SERIES 148 — Common Type in Small Size with Zero-Adjustable Thimble



148-503



148-504

FEATURES

- The thimble can be set to zero at any position by loosening the set screw.

SPECIFICATIONS

Metric

Range	Order No.	Accuracy	Stem dia.	Stem	Spindle face	Remarks
0 - 13mm	**148-503**	±2µm	9.5mm	Plain	Flat	—
0 - 13mm	**148-513**	±2µm	9.5mm	Plain	Flat	Stainless steel throughout
0 - 13mm	**148-508**	±2µm	9.5mm	w/clamp nut	Flat	—
0 - 13mm	**148-506**	±2µm	9.5mm	Plain*	Flat	—
0 - 13mm	**148-504**	±2µm	9.5mm	w/clamp nut*	Flat	—
0 - 13mm	**148-853**	±2µm	9.5mm	Plain	Spherical (SR4)	—
0 - 13mm	**148-854**	±2µm	9.5mm	w/clamp nut*	Spherical (SR4)	—
13mm - 0	**148-863**	±2µm	9.5mm	Plain	Flat	Reverse reading
13mm - 0	**148-864**	±2µm	9.5mm	w/ clamp nut*	Flat	Reverse reading

*with spindle lock

Inch

Range	Order No.	Accuracy	Stem dia.	Stem	Spindle face	Remarks
0 - .5"	**148-501**	±.0001"	.375"	Plain	Flat	—
0 - .5"	**148-511**	±.0001"	.375"	Plain	Flat	Stainless steel throughout
0 - .5"	**148-507**	±.0001"	.375"	w/clamp nut	Flat	—
0 - .5"	**148-505**	±.0001"	.375"	Plain*	Flat	—
0 - .5"	**148-502**	±.0001"	.375"	w/clamp nut*	Flat	—
0 - .5"	**148-851**	±.0001"	.375"	Plain	Spherical (SR4)	—
0 - .5"	**148-852**	±.0001"	.375"	w/clamp nut*	Spherical (SR4)	—
.5" - 0	**148-861**	±.0001"	.375"	Plain	Flat	Reverse reading
.5" - 0	**148-862**	±.0001"	.375"	w/ clamp nut*	Flat	Reverse reading

*with spindle lock

Technical Data

Graduations: 0.01mm or .001"
Spindle pitch: 0.5mm
Spindle face: Flat or spherical of SKS3 (more than HRC60), lapped surface
Scale surface: Hard-chrome plating
Fixture thickness for clamp nut: 6mm

DIMENSIONS AND MASS

Unit: mm

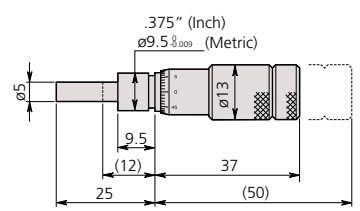

148-503 / 148-501 35g

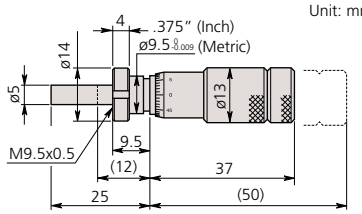

148-508 / 148-507 40g

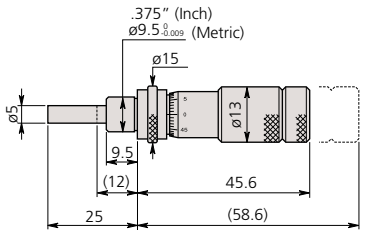

148-506 / 148-505 35g

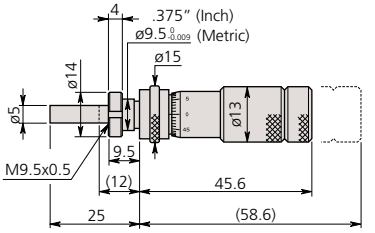

148-504 / 148-502 40g

( ): when retracting the spindle until its stroke end.

Mitutoyo

Micrometer Heads

SERIES 149 — Common Type in Small Size with Carbide-tipped Spindle

FEATURES

• Carbide-tipped measuring face.

SPECIFICATIONS

Metric

Range	Order No.	Accuracy	Stem dia.	Stem	Spindle face	Remarks
0 - 15mm	**149-132**	±2μm	9.5mm	Plain	Flat (carbide tip)	—
0 - 15mm	**149-131**	±2μm	9.5mm	w/clamp nut	Flat (carbide tip)	—
0 - 15mm	**149-183**	±2μm	9.5mm	Plain*	Flat (carbide tip)	With spindle lock
0 - 15mm	**149-184**	±2μm	9.5mm	w/clamp nut*	Flat (carbide tip)	With spindle lock
0 - 15mm	**149-801**	±2μm	9.5mm	Plain	Spherical (SR4)	—
0 - 15mm	**149-802**	±2μm	9.5mm	w/clamp nut	Spherical (SR4)	—
15mm - 0	**149-821**	±2μm	9.5mm	Plain	Flat (carbide tip)	Reverse reading
15mm - 0	**149-822**	±2μm	9.5mm	w/ clamp nut	Flat (carbide tip)	Reverse reading

*with spindle lock.

Inch

Range	Order No.	Accuracy	Stem dia.	Stem	Spindle face	Remarks
0 - .5"	**149-148**	±.0001"	.375"	Plain	Flat (carbide tip)	—
0 - .5"	**149-147**	±.0001"	.375"	w/clamp nut	Flat (carbide tip)	—
0 - .5"	**149-185**	±.0001"	.375"	Plain*	Flat (carbide tip)	With spindle lock
0 - .5"	**149-182**	±.0001"	.375"	w/clamp nut*	Flat (carbide tip)	With spindle lock
0 - .5"	**149-811**	±.0001"	.375"	Plain	Spherical (SR4)	—
0 - .5"	**149-812**	±.0001"	.375"	w/clamp nut	Spherical (SR4)	—
.5" - 0	**149-831**	±.0001"	.375"	Plain	Flat (carbide tip)	Reverse reading
.5" - 0	**149-832**	±.0001"	.375"	w/ clamp nut	Flat (carbide tip)	Reverse reading

*with spindle lock.

DIMENSIONS AND MASS

Unit: mm

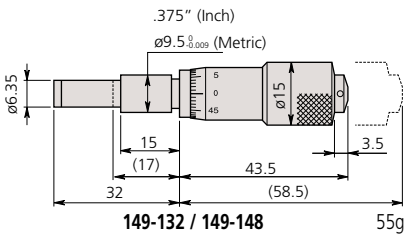

149-132 / 149-148 55g

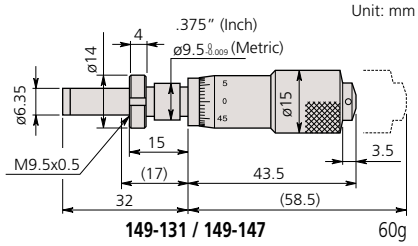

149-131 / 149-147 60g

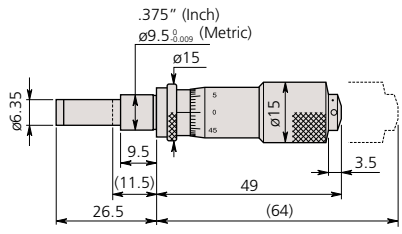

149-183 / 149-185 55g

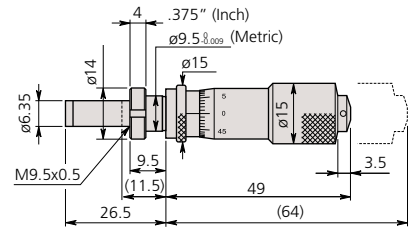

149-184 / 149-182 60g

( ): when retracting the spindle until its stroke end.



149-132



149-184

Technical Data

Graduations: 0.01mm or .001"
Spindle pitch: 0.5mm
Spindle face: Flat with carbide tip (more than HRA90) or spherical, lapped surface
Scale surface: Hard-chrome plating
Fixture thickness for clamp nut: 6mm
(**149-131**, **149-147**: 11.5mm)

Micrometer Heads

SERIES 150 — Common Type in Middle Size





FEATURES

- Ratchet stop for constant force.
- Long spindle type is available for a variety of applications.
- Carbide-tipped measuring face.

SPECIFICATIONS

Metric

Range	Order No.	Accuracy	Stem dia.	Stem	Spindle face	Remarks
0 - 25mm	**150-192**	±2μm	10mm	Plain	Flat (carbide tip)	—
0 - 25mm	**150-191**	±2μm	10mm	w/clamp nut	Flat (carbide tip)	—
0 - 25mm	**150-209**	±2μm	10mm	Plain*	Flat (carbide tip)	—
0 - 25mm	**150-210**	±2μm	10mm	w/clamp nut*	Flat (carbide tip)	—
0 - 25mm	**150-801**	±2μm	10mm	Plain	Spherical (SR4)	—
0 - 25mm	**150-802**	±2μm	10mm	w/clamp nut	Spherical (SR4)	—
0 - 25mm	**150-821**	±2μm	10mm	Plain	Flat (carbide tip)	Reverse reading
0 - 25mm	**150-822**	±2μm	10mm	w/clamp nut	Flat (carbide tip)	Reverse reading
0 - 25mm	**150-190**	±2μm	10mm	Plain	Flat (carbide tip)	w/ vernier (0.001mm)
0 - 25mm	**150-189**	±2μm	10mm	w/clamp nut	Flat (carbide tip)	w/ vernier (0.001mm)
0 - 25mm	**150-196**	±2μm	10mm	Plain*	Flat (carbide tip)	w/ vernier (.0001mm)
0 - 25mm	**150-195**	±2μm	10mm	w/clamp nut*	Flat (carbide tip)	w/ vernier (.0001mm)
0 - 25mm	**150-211**	±2μm	10mm	Plain*	Flat (carbide tip)	w/o ratchet stop
0 - 25mm	**150-212**	±2μm	10mm	w/clamp nut*	Flat (carbide tip)	w/o ratchet stop
0 - 25mm	**150-219**	±2μm	10mm	Plain	Flat	Long spindle
0 - 25mm	**150-220**	±2μm	10mm	w/ clamp nut	Flat	Long spindle

*with spindle lock

Inch

Range	Order No.	Accuracy	Stem dia.	Stem	Spindle face	Remarks
0 - 1"	**150-208**	±.0001"	.375"	Plain	Flat (carbide tip)	—
0 - 1"	**150-198**	±.0001"	.375"	Plain	Flat (carbide tip)	w/o ratchet stop
0 - 1"	**150-207**	±.0001"	.375"	w/clamp nut	Flat (carbide tip)	—
0 - 1"	**150-197**	±.0001"	.375"	w/clamp nut	Flat (carbide tip)	w/o ratchet stop
0 - 1"	**150-213**	±.0001"	.375"	Plain*	Flat (carbide tip)	—
0 - 1"	**150-214**	±.0001"	.375"	w/clamp nut*	Flat (carbide tip)	—
0 - 1"	**150-811**	±.0001"	.375"	Plain	Spherical (SR4)	—
0 - 1"	**150-812**	±.0001"	.375"	w/clamp nut	Spherical (SR4)	—
0 - 1"	**150-831**	±.0001"	.375"	Plain	Flat (carbide tip)	Reverse reading
0 - 1"	**150-832**	±.0001"	.375"	w/clamp nut	Flat (carbide tip)	Reverse reading
0 - 1"	**150-206**	±.0001"	.375"	Plain	Flat (carbide tip)	w/ vernier (.0001")
0 - 1"	**150-205**	±.0001"	.375"	w/clamp nut	Flat (carbide tip)	w/ vernier (.0001")
0 - 1"	**150-215**	±.0001"	.375"	Plain*	Flat (carbide tip)	w/ vernier (.0001")
0 - 1"	**150-216**	±.0001"	.375"	w/clamp nut*	Flat (carbide tip)	w/ vernier (.0001")
0 - 1"	**150-217**	±.0001"	.375"	Plain*	Flat (carbide tip)	w/o ratchet stop
0 - 1"	**150-218**	±.0001"	.375"	w/clamp nut*	Flat (carbide tip)	w/o ratchet stop
0 - 1"	**150-221**	±.0001"	.375"	Plain	Flat	Long spindle
0 - 1"	**150-222**	±.0001"	.375"	w/ clamp nut	Flat	Long spindle

*with spindle lock

Technical Data

Graduations: 0.01mm, 0.001mm, .001" or .0001"
Spindle pitch: 0.5mm
Spindle face: Flat with carbide tip* (more than HRA90) or spherical, lapped surface
*Long spindle type: SKS3 (more than HRC60)
Scale surface: Hard-chrome plating
Fixture thickness for clamp nut: 11.5mm

DIMENSIONS AND MASS

Unit: mm

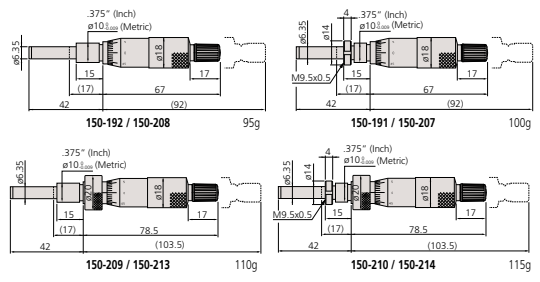

( ): when retracting the spindle until its stroke end.

Mitutoyo

Micrometer Heads

SERIES 151 — Common Type in Middle Size with 8mm Diameter Spindle

FEATURES

- 8mm diameter spindle for heavy-duty use.
- Ratchet stop for constant force.
- Carbide-tipped measuring face.

SPECIFICATIONS

Metric

Range	Order No.	Accuracy	Stem dia.	Stem	Spindle face	Remarks
0 - 25mm	**151-224**	±2μm	12mm	Plain	Flat (carbide tip)	—
0 - 25mm	**151-223**	±2μm	12mm	w/clamp nut	Flat (carbide tip)	—
0 - 25mm	**151-214**	±2μm	12mm	Plain*	Flat (carbide tip)	—
0 - 25mm	**151-213**	±2μm	12mm	w/clamp nut*	Flat (carbide tip)	—
0 - 25mm	**151-222**	±2μm	12mm	Plain	Flat (carbide tip)	w/ vernier (0.001mm)
0 - 25mm	**151-221**	±2μm	12mm	w/clamp nut	Flat (carbide tip)	w/ vernier (0.001mm)
0 - 25mm	**151-212**	±2μm	12mm	Plain*	Flat (carbide tip)	w/ vernier (0.001mm)
0 - 25mm	**151-211**	±2μm	12mm	w/clamp nut*	Flat (carbide tip)	w/ vernier (0.001mm)
0 - 25mm	**151-227**	±2μm	12mm	Plain	Flat (carbide tip)	w/o ratchet stop
0 - 25mm	**151-228**	±2μm	12mm	w/clamp nut	Flat (carbide tip)	w/o ratchet stop
0 - 25mm	**151-225**	±2μm	12mm	Plain*	Flat (carbide tip)	w/o ratchet stop
0 - 25mm	**151-226**	±2μm	12mm	w/clamp nut*	Flat (carbide tip)	w/o ratchet stop
0 - 50mm	**151-256**	±4μm	12mm	Plain	Flat (carbide tip)	—
0 - 50mm	**151-255**	±4μm	12mm	w/clamp nut	Flat (carbide tip)	—
0 - 50mm	**151-260**	±4μm	12mm	Plain	Flat (carbide tip)	w/o ratchet stop
0 - 50mm	**151-259**	±4μm	12mm	w/ clamp nut	Flat (carbide tip)	w/o ratchet stop

*with spindle lock

Inch

Range	Order No.	Accuracy	Stem dia.	Stem	Spindle face	Remarks
0 - 1"	**151-240**	±.0001"	.5"	Plain	Flat (carbide tip)	—
0 - 1"	**151-239**	±.0001"	.5"	w/clamp nut	Flat (carbide tip)	—
0 - 1"	**151-238**	±.0001"	.5"	Plain	Flat (carbide tip)	w/ vernier (.0001")
0 - 1"	**151-237**	±.0001"	.5"	w/clamp nut	Flat (carbide tip)	w/ vernier (.0001")
0 - 1"	**151-243****	±.0001"	.5"	Plain*	Flat (carbide tip)	w/ vernier (.0001")
0 - 1"	**151-244****	±.0001"	.5"	w/clamp nut*	Flat (carbide tip)	w/ vernier (.0001")
0 - 1"	**151-241**	±.0001"	.5"	Plain*	Flat (carbide tip)	w/o ratchet stop
0 - 1"	**151-242**	±.0001"	.5"	w/clamp nut*	Flat (carbide tip)	w/o ratchet stop
0 - 2"	**151-272**	±.0002"	.5"	Plain	Flat (carbide tip)	—
0 - 2"	**151-271**	±.0002"	.5"	w/clamp nut	Flat (carbide tip)	—

*with spindle lock **with ratchet stop

DIMENSIONS AND MASS

Unit: mm

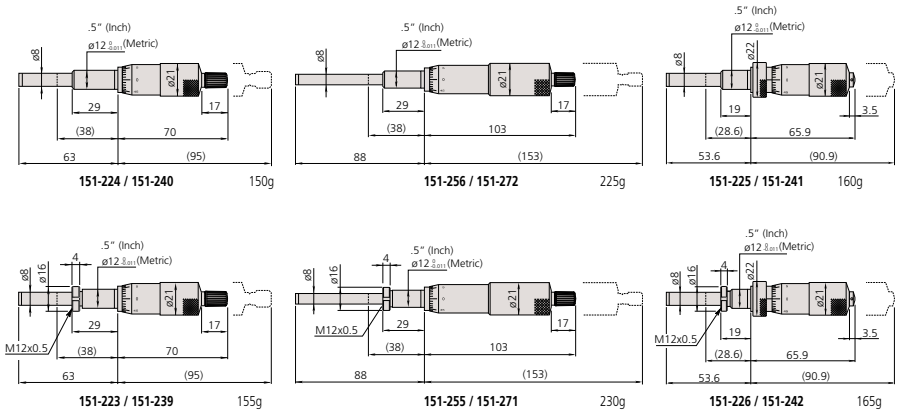

151-224 / 151-240 150g

151-256 / 151-272 225g

151-225 / 151-241 160g

151-223 / 151-239 155g

151-255 / 151-271 230g

151-226 / 151-242 165g

( ): when retracting the spindle until its stroke end.

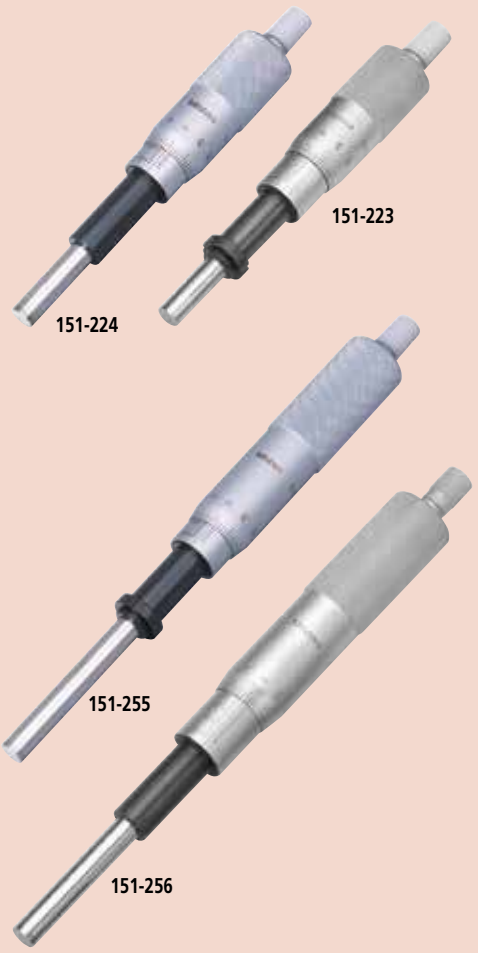

Technical Data

Graduations: 0.01mm, 0.001mm, .001" or .0001"
Spindle pitch: 0.5mm
Spindle face: Flat with carbide tip (more than HRA90), lapped surface
Scale surface: Hard-chrome plating
Fixture thickness for clamp nut: 25.5mm

Micrometer Heads

SERIES 153 — Non-rotating Spindle Type

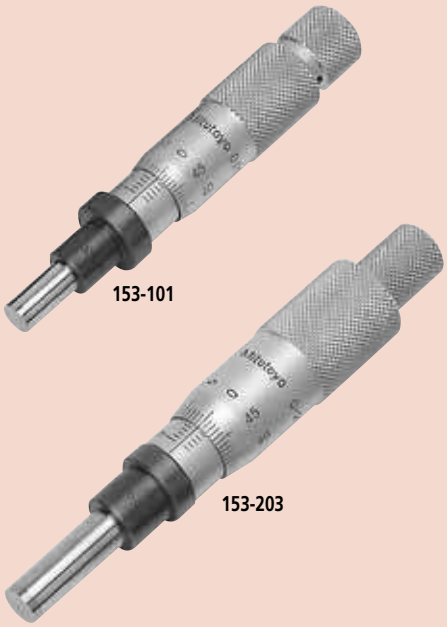

FEATURES

- Carbide-tipped measuring face.
- Non-rotating spindle.

SPECIFICATIONS

Metric

Range	Order No.	Accuracy	Stem dia.	Stem	Spindle face	Remarks
0 - 15mm	**153-101**	±3µm	9.5mm	Plain	Flat (carbide tip)	w/ vernier (0.001mm)
0 - 25mm	**153-201***	±3µm	12mm	Plain	Flat (carbide tip)	—
0 - 25mm	**153-202***	±3µm	12mm	Plain	Flat (carbide tip)	w/ vernier (0.001mm)
0 - 25mm	**153-203**	±3µm	12mm	Plain	Flat (carbide tip)	—
0 - 25mm	**153-204**	±3µm	12mm	Plain	Flat (carbide tip)	w/ vernier (0.001mm)

*with ratchet stop

Inch

Range	Order No.	Accuracy	Stem dia.	Stem	Spindle face	Remarks
0 - .5"	**153-108**	±.00015"	.375"	Plain	Flat (carbide tip)	w/ vernier (.0001")
0 - 1"	**153-205***	±.00015"	.5"	Plain	Flat (carbide tip)	—
0 - 1"	**153-206***	±.00015"	.5"	Plain	Flat (carbide tip)	w/ vernier (.0001")
0 - 1"	**153-207**	±.00015"	.5"	Plain	Flat (carbide tip)	—
0 - 1"	**153-208**	±.00015"	.5"	Plain	Flat (carbide tip)	w/ vernier (.0001")

*with ratchet stop

Technical Data

Graduations: 0.01mm, 0.001mm, .001" or .0001"
Spindle pitch: 0.5mm
Spindle face: Flat with carbide tip (more than HRA90), lapped surface
Scale surface: Hard-chrome plating

DIMENSIONS AND MASS

Unit: mm

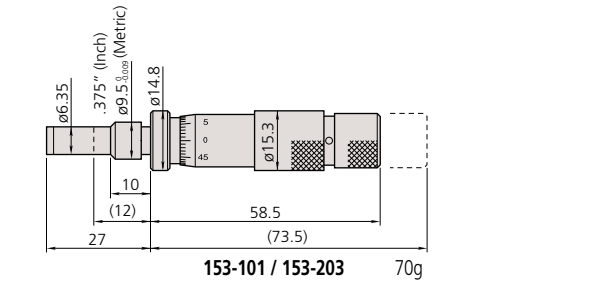

153-101 / 153-203 70g

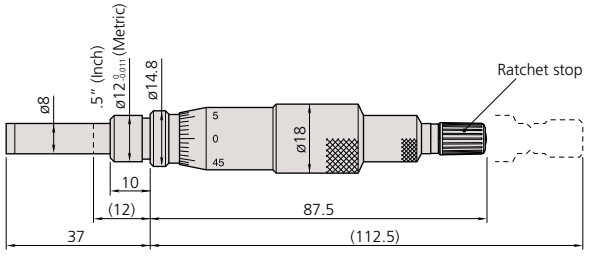

153-201 / 153-205 125g

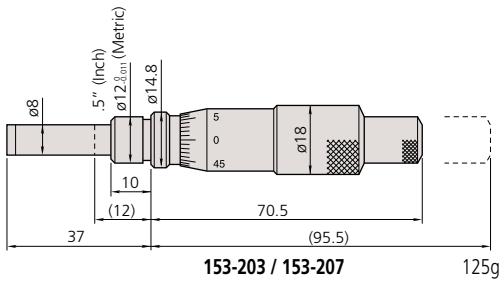

153-203 / 153-207 125g

( ): when retracting the spindle until its stroke end.

Mitutoyo

Micrometer Heads

SERIES 152 — Quick Spindle Feeding of 1mm/rev.

FEATURES

- Quick spindle feeding of 1mm/rev.
- Carbide-tipped measuring face.



152-102

Technical Data

Graduations: 0.01mm
Spindle pitch: 1mm
Spindle face: Flat with carbide tip (more than HRA90), lapped surface
Scale surface: Hard-chrome plating

SPECIFICATIONS

Metric

Range	Order No.	Accuracy	Stem dia.	Stem	Spindle face	Remarks
0 - 15mm	**152-101**	±2µm	12mm	Plain	Flat (carbide tip)	—
0 - 25mm	**152-102**	±2µm	12mm	Plain	Flat (carbide tip)	—
0 - 50mm	**152-103**	±4µm	12mm	Plain	Flat (carbide tip)	—

DIMENSIONS AND MASS

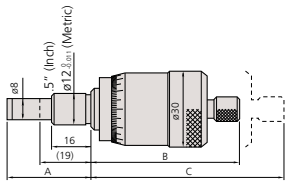

152-101

( ): when retracting the spindle until its stroke end.

Unit: mm

Range	A	B	C	Mass (g)
0 - 15mm	34	60	75	205
0 - 25mm	44	69	94	230
0 - 50mm	69	94	144	355

Micrometer Heads

SERIES 152 — Large Thimble Type for Fine Feeding

FEATURES

- The large diameter thimble for fine adjustment and positioning.
- Carbide-tipped measuring face.



152-283

Technical Data

Graduations: 0.002mm or .0001"
Spindle pitch: 1mm
Spindle face: Flat with carbide tip (more than HRA90), lapped surface
Scale surface: White anodized aluminum
Fixture thickness for clamp nut: 22.5mm

SPECIFICATIONS

Metric

Range	Order No.	Accuracy	Stem dia.	Stem	Spindle face	Remarks
0 - 10mm	**152-283**	±2µm	12mm	w/clamp nut	Flat (carbide tip)	—
0 - 25mm	**152-332**	±2µm	12mm	Plain	Flat (carbide tip)	—
0 - 25mm	**152-348**	±2µm	12mm	Plain	Flat (carbide tip)	Bidirectional graduation
0 - 50mm	**152-380**	±4µm	12mm	Plain	Flat (carbide tip)	Bidirectional graduation

Inch

Range	Order No.	Accuracy	Stem dia.	Stem	Spindle face	Remarks
0 - 1"	**152-372**	±.0001"	.5"	Plain	Flat (carbide tip)	Bidirectional graduation
0 - 2"	**152-388**	±.0002"	.5"	Plain	Flat (carbide tip)	Bidirectional graduation

DIMENSIONS AND MASS

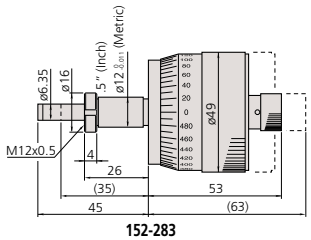

152-283

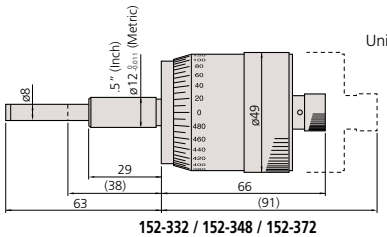

152-332 / 152-348 / 152-372

Unit: mm

Micrometer Heads

SERIES 110 — Differential Screw Translator (Extra-Fine Feeding) Type

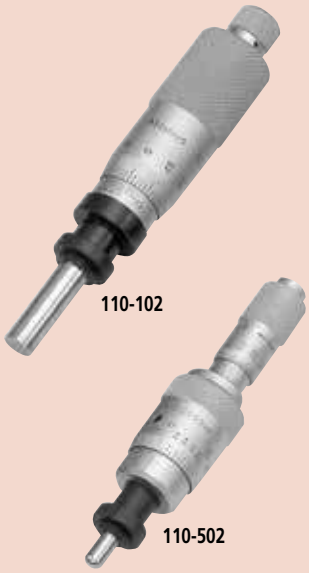

Technical Data

Graduations: 0.001mm, 0.0005mm, 0.0001mm, .00005" or .00002", .000005"
Spindle pitch: 0.05mm or 0.025mm
Spindle face: Flat with carbide tip (more than HRA90) or spherical, lapped surface
Scale surface: Hard-chrome plating
Fixture thickness for clamp nut: 9.5mm (11.5mm*)
*110-502, 110-504

FEATURES

- Differential movements of spindle threads and units allow fine spindle feeding (0.05mm/rev*), resulting in high-resolution measurements.
  *110-502, 110-504: 0.025mm/rev / .001"/rev (fine feeding)
- Carbide-tipped measuring face.
- Non-rotating spindle.

SPECIFICATIONS

Metric

Range	Order No.	Graduation	Accuracy*	Stem dia.	Stem	Spindle face
0 - 1mm	**110-105**	0.001mm	±3 / ±1.5µm	12mm	w/clamp nut	Flat (carbide tip)
0 - 1mm	**110-106**	0.0001mm	±3 / ±1.5µm	12mm	w/clamp nut	Flat (carbide tip)
0 - 1mm	**110-107**	0.001mm	±3 / ±1.5µm	12mm	w/clamp nut	Flat (carbide tip)
0 - 1mm	**110-108**	0.0001mm	±3 / ±1.5µm	12mm	w/clamp nut	Flat (carbide tip)
0 - 2.5mm	**110-101**	0.001mm	±3 / ±1.5µm	12mm	w/clamp nut	Spherical (SR8)
0 - 2.5mm	**110-102**	0.0001mm	±3 / ±1.5µm	12mm	w/clamp nut	Spherical (SR8)
0 - 13mm	**110-502***	0.0005mm 0.01mm	±3 / ±1.5µm	9.5mm	w/clamp nut	Spherical (SR3)

* Narrow range (within 1 rev.): 0.2mm

Inch

Range	Order No.	Graduation	Accuracy*	Stem dia.	Stem	Spindle face
0 - .02"	**110-115**	.00005"	±.00015" / ±.00006"	.5"	w/clamp nut	Flat (carbide tip)
0 - .02"	**110-116**	.000005"	±.00015" / ±.00006"	.5"	w/clamp nut	Flat (carbide tip)
0 - .02"	**110-117**	.00005"	±.00015" / ±.00006"	.5"	w/clamp nut	Flat (carbide tip)
0 - .02"	**110-118**	.000005"	±.00015" / ±.00006"	.5"	w/clamp nut	Flat (carbide tip)
0 - .05"	**110-111**	.00005"	±.0002" / ±.00006"	.5"	w/clamp nut	Spherical (SR8)
0 - .05"	**110-112**	.000005"	±.0002" / ±.00006"	.5"	w/clamp nut	Spherical (SR8)
0 - .5"	**110-504***	.00002" .001"	±.00015" / ±.00006"	.375"	w/clamp nut	Spherical (SR3)

* Narrow range (within 1 rev.): .006"

DIMENSIONS AND MASS

Unit: mm

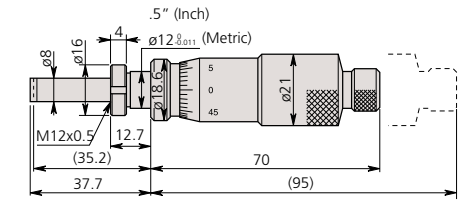

110-101 / 110-111
110-102 / 110-112 150g

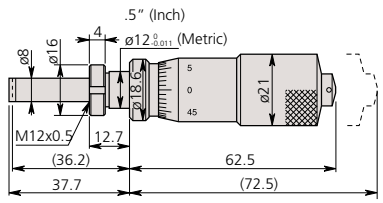

110-105 / 110-115
110-106 / 110-116 150g

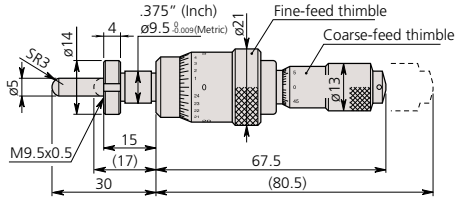

110-502 / 110-504 95g

( ): when retracting the spindle until its stroke end.

Mitutoyo

Micrometer Heads

SERIES 152 — for XY-Stage

FEATURES

152-390, 152-389, 152-391, 152-392

- Non-rotating device is attached to the spindle tip.
- Floating thimble allows easy zero setting at any spindle position.
- Bidirectional graduation for easy reading in both directions.

152-401, 152-402

- Adjustable spindle can be moved with the thimble and held at any position, allowing easy zero-setting.



152-390

SPECIFICATIONS

Metric

Range	Order No.	Accuracy	Stem dia.	Stem	Spindle face	Remarks
0 - 25mm	**152-390**	±2µm	18mm	Plain	Flat (hardened) with non-rotating device	for X-axis, bidirectional grad.
0 - 25mm	**152-389**	±2µm	18mm	Plain		for Y-axis, bidirectional grad.
0 - 25mm	**152-402***	±2µm	18mm	Plain	Spherical with carbide tip (SR10)	for X-axis, with vernier
0 - 25mm	**152-401***	±2µm	18mm	Plain		for Y-axis, with vernier

*0.001mm reading is obtained with vernier

Inch

Range	Order No.	Accuracy	Stem dia.	Stem	Spindle face	Remarks
0 - 1"	**152-392**	±.0001"	.709"	Plain	Flat (hardened) with non-rotating device	for X-axis, Bidirectional grad.
0 - 1"	**152-391**	±.0001"	.709"	Plain		for Y-axis, Bidirectional grad.

Technical Data

Graduations: 0.005mm, 0.001mm*
*vernier reading
Spindle pitch: 1mm
Spindle face: Flat (hardened) or spherical with carbide tip (more than HRA90), lapped surface
Scale surface: White anodized aluminum

DIMENSIONS AND MASS

Unit: mm

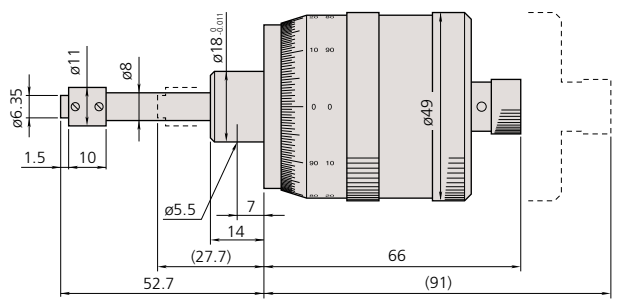

152-390 / 152-392 270g

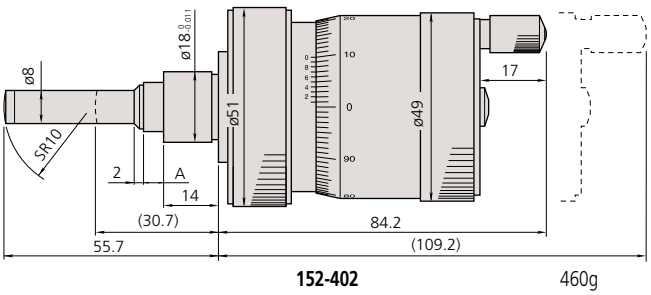

152-402 460g

( ): when retracting the spindle until its stroke end.

Micrometer Heads

SERIES 197 — Non-rotating Spindle and Large Thimble



197-101

FEATURES

- Large thimble micrometer head with non-rotating spindle.
- Floating thimble allows easy zero setting at any spindle position.
- Bidirectional graduation for easy reading in both directions.
- Dual-spindle mechanism for quick feeding of 1mm/rev.
- Carbide-tipped measuring face.

SPECIFICATIONS

Metric

Range	Order No.	Accuracy	Stem dia.	Stem	Spindle face	Remarks
0 - 50mm	**197-101**	±5µm	18mm	Plain	Flat (carbide tip)	Bidirectional graduation

Inch

Range	Order No.	Accuracy	Stem dia.	Stem	Spindle face	Remarks
0 - 2"	**197-201**	±.0002"	.709"	Plain	Flat (carbide tip)	Bidirectional graduation

Technical Data

Graduations: 0.005mm or .0002"
Spindle pitch: 1mm
Spindle face: Flat with carbide tip (more than HRA90), lapped surface
Scale surface: White anodized aluminum

DIMENSION AND MASS

Unit: mm

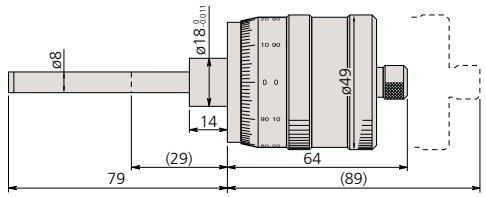

( ): when retracting the spindle until its stroke end.

197-101 / 197-201 300g

Micrometer Heads

SERIES 153 — Fine Graduation and High Accuracy

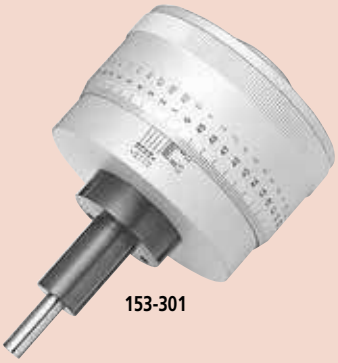

153-301

FEATURES

- Fine graduation and high-resolution model.
- Large thimble micrometer head with non-rotating spindle.
- Bidirectional graduation for easy reading in both directions.
- Carbide-tipped measuring face.

SPECIFICATIONS

Metric

Range	Order No.	Accuracy*	Stem dia.	Stem	Spindle face	Remarks
0 - 25mm	**153-301**	±1 / ±0.5µm	18mm	Plain	Flat (carbide tip)	Bidirectional graduation

*Wide range / narrow range

Inch

Range	Order No.	Accuracy*	Stem dia.	Stem	Spindle face	Remarks
0 - 1"	**153-302**	±.00004" / ±.00002"	.709"	Plain	Flat (carbide tip)	Bidirectional graduation

*Wide range / narrow range

Technical Data

Graduations: 0.0005mm or .00001"
Spindle pitch: 0.5mm
Spindle face: Flat with carbide tip (more than HRA90), lapped surface
Scale surface: White anodized aluminum

DIMENSIONS AND MASS

Unit: mm

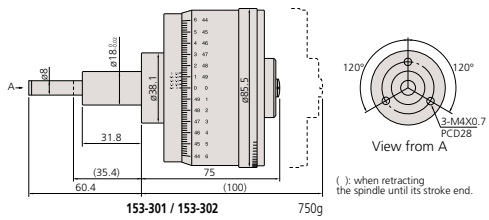

( ): when retracting the spindle until its stroke end.

153-301 / 153-302 750g

Mitutoyo

Micrometer Heads

SERIES 250 — with Digit Counter

FEATURES

- Digit counter for easy reading of spindle movement.
- Carbide-tipped measuring face.
- Ratchet stop for constant force.

SPECIFICATIONS

Metric

Range	Order No.	Accuracy	Stem dia.	Stem	Spindle face	Remarks
0 - 25mm	**250-301**	±2µm	10mm	Plain	Flat (carbide tip)	—

Inch

Range	Order No.	Accuracy	Stem dia.	Stem	Spindle face	Remarks
0 - 1"	**250-312**	±.0001"	.375"	Plain	Flat (carbide tip)	w / vernier (.0001")

DIMENSIONS AND MASS

Unit: mm

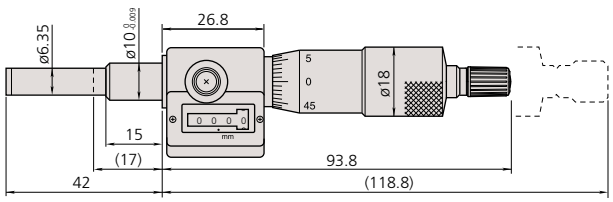

250-301 / 250-312 Mass: 165g

( ): when retracting the spindle with adjustable handle



250-301

Technical Data

Graduations: 0.01mm or .0001"
Spindle pitch: 0.5mm
Spindle face: Flat with carbide tip (more than HRA90), lapped surface
Scale surface: Hard-chrome plating

Micro Jack

SERIES 7

FEATURES

- Used for accurate leveling of machines, surface plates and other precision instruments.
- Easy adjustment under heavy load.



7850

SPECIFICATIONS

Metric

Range	Order No.	Graduation	Max. Load	Remarks
60 - 75mm	**7850**	0.01mm	400kg	adjustable handle

DIMENSIONS AND MASS

Unit: mm

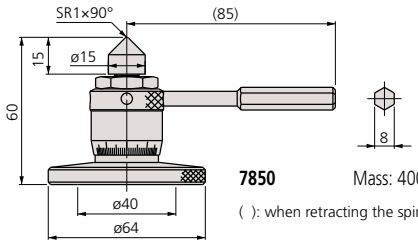

7850 Mass: 400g

( ): when retracting the spindle with adjustable handle

Technical Data

Graduations: 0.01mm



Precision Lead Screw

Technical Data

- Durability: 100,000 cycles are guaranteed (use condition: 4 kg load; 2 kg for AS-6.5 and BS-6.5)
- Main applications
  - Precision feed stages
  - Fine adjustment of optical elements (mirrors, prisms)
  - Fiber optic centering devices
  - Various assembly and adjustment jigs

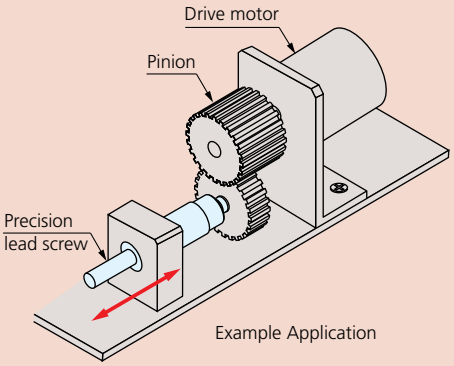

FEATURES

- Mitutoyo manufactures simple and economical precision lead screws for precise positioning mechanisms and fine-feed mechanisms, in addition to the conventional micrometer heads.
- Mitutoyo also manufactures screws with special specifications, such as 0.25 mm pitch, as well as those with the standard 0.5 mm feed pitch and with dimensions and forms that meet customer's requirements.



SPECIFICATIONS

Order No.	Model	Stroke (mm)	Feed pitch (mm)	Feed accuracy (μm)	Stem diameter (mm)	Tip diameter (mm)	Tail diameter (mm)	Screw nominal diameter	Sleeve diameter (mm)	Measuring face	Mass	Others
04AZA160	AS-6.5	6.5	0.5	±5	$\phi 6^{\ 0}_{-0.008}$	ø3.5	$\phi 3^{\ 0}_{-0.01}$	M4.5 x 0.5	ø7	Hardened	10g	• AS type: Flat spindle tip without nut • BS type: Spherical spindle tip with nut
04AZA161	BS-6.5										11g	
04AZA162	AS-13	13		±2	$\phi 9.5^{\ 0}_{-0.009}$	ø5	$\phi 5^{\ 0}_{-0.012}$	M7.35 x 0.5	ø10.5		27g	
04AZA163	BS-13										30g	
04AZA164	AS-25	25			$\phi 10^{\ 0}_{-0.009}$	ø6.35	$\phi 6^{\ 0}_{-0.015}$		ø12	Carbide	61g	
04AZA165	BS-25										64g	

DIMENSIONS

Unit: mm

Type A: Straight type

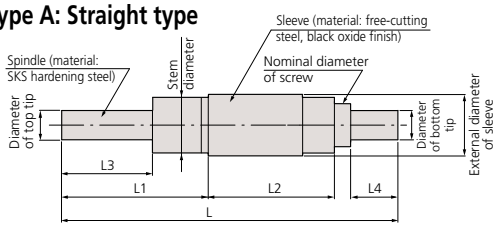

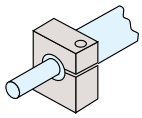

Type B: Stem with nut

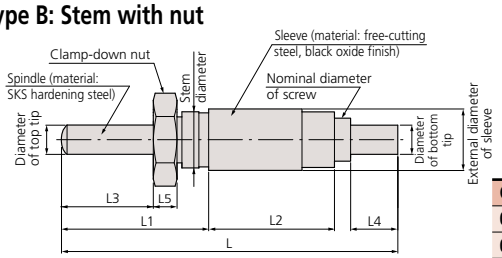

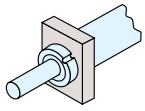

Order No.	L	L1	L2	L3	L4	L5
04AZA160	39	15	14.5	9	6	—
04AZA161	39	15	14.5	7.5	6	3
04AZA162	57.5	25	21.5	15.5	8	—
04AZA163	57.5	25	21.5	15.5	8	4
04AZA164	98.5	42	39.5	27	10	—
04AZA165	98.5	42	39.5	27	10	4

Fixtures for Micrometer Heads

FEATURES

- The act of fabricating brackets to mount micrometer heads for each particular application can be laborious and costly. Mitutoyo offers various types of fixtures for micrometer heads to meet a range of applications. These fixtures are made of nickel-plated cast iron.
- There are two types of fixtures for micrometer heads--with or without clamping nut on the stem.

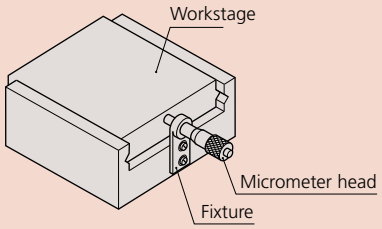

DIMENSIONS: Fixtures for plain-stem type micrometer heads

Unit: mm

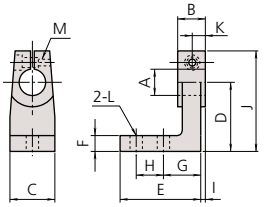

Order No.	303560	303569	303579
A	ø9.5	ø9.5	ø10
B	9	14.5	14.5
C	14.5	19.5	19.5
D	20	30	30
E	23	35	35
F	5	7	7
G	11	16	16
H	8	12	12
I	1.5	3.25	3.25
J	32.5	42.5	42.5
K	4.5	7.25	7.25
L	ø3.4	ø4.5	ø4.5
M	M3x0.5	M3x0.5	M3x0.5

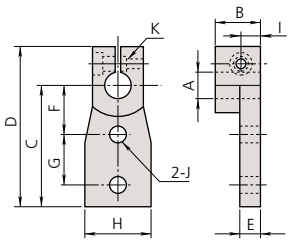

Order No.	303564	303573	303583
A	ø9.5	ø9.5	ø10
B	9	14.5	14.5
C	30	40	40
D	42.5	52.5	52.5
E	4	6	6
F	15	18	18
G	10	15	15
H	15	20	20
I	4.5	7.25	7.25
J	ø3.4	ø4.5	ø4.5
K	M3x0.5	M3x0.5	M3x0.5

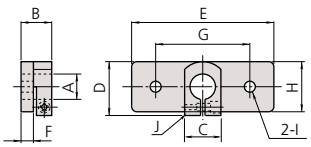

Order No.	303562	303571	303581
A	ø9.5	ø9.5	ø10
B	9	14.5	14.5
C	15	15	15
D	20	22.5	22.5
E	40	60	60
F	3	5	5
G	30	40	40
H	15	20	20
I	ø3.4	ø4.5	ø4.5
J	M3x0.5	M3x0.5	M3x0.5

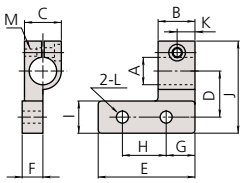

Order No.	303566	303575	303585
A	ø9.5	ø9.5	ø10
B	9	14.5	14.5
C	15	15	15
D	15	20	20
E	25	40	40
F	8.5	8.5	8.5
G	7.5	10	10
H	10	20	20
I	10	15	15
J	32.5	40	40
K	4.5	7.25	7.25
L	ø3.4	ø4.5	ø4.5
M	M3x0.5	M3x0.5	M3x0.5

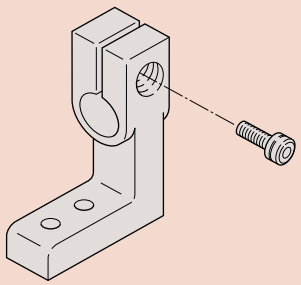

Note: Supplied with a socket head screw (M3x0.5x12mm) for the fixtures to be used with a micrometer head without clamp nut (plain stem type micrometer head).

Fixtures for Micrometer Heads

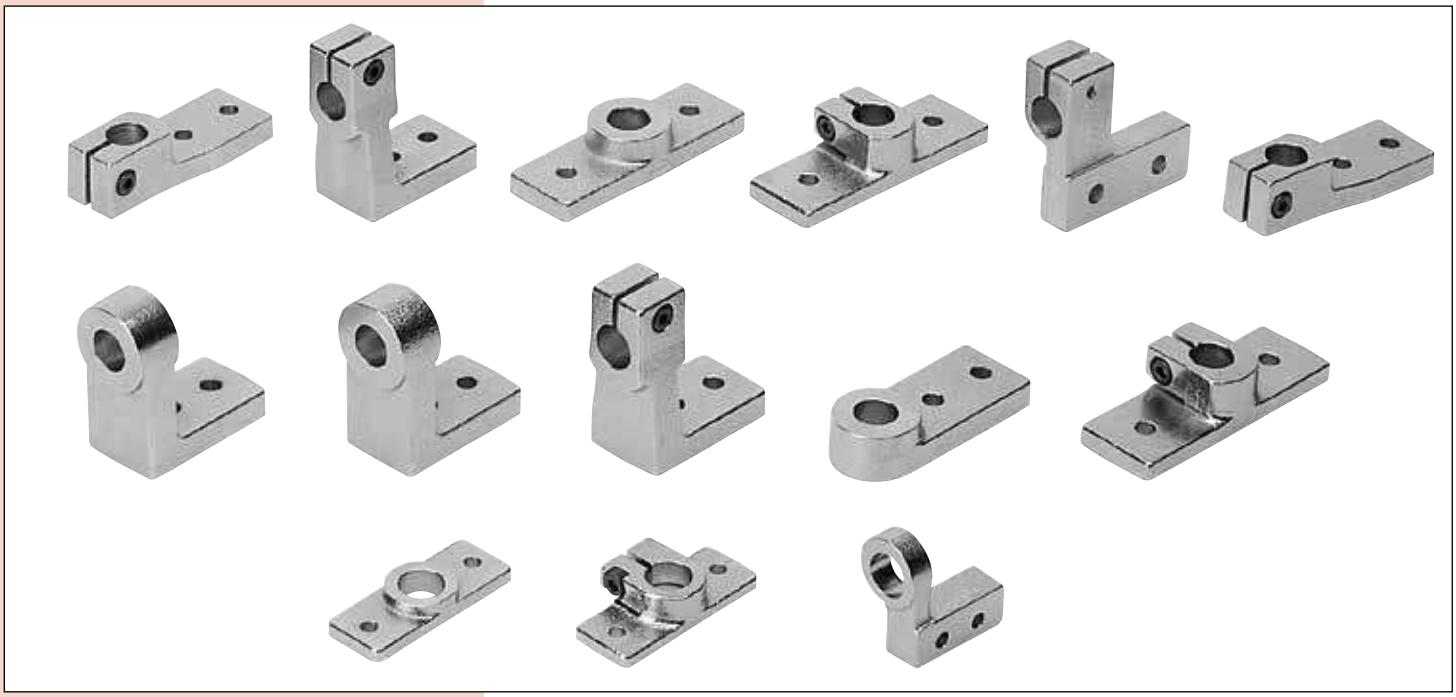

DIMENSIONS: Fixtures for micrometer heads with clamp nut

Unit: mm

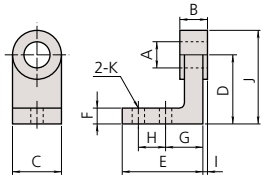

Order No.	303559	303568	303578
A	ø9.5	ø9.5	ø10
B	6	11.5	11.5
C	14.5	19.5	19.5
D	20	30	30
E	24	35	35
F	5	7	7
G	11	16	16
H	8	12	12
I	0.5	1.75	1.75
J	27.5	40	40
K	ø3.4	ø4.5	ø4.5

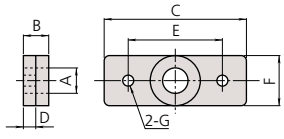

Order No.	303561	303570	303580
A	ø9.5	ø9.5	ø10
B	6	11.5	11.5
C	40	60	60
D	3.5	5.5	5.5
E	30	40	40
F	15	20	20
G	ø3.4	ø4.5	ø4.5

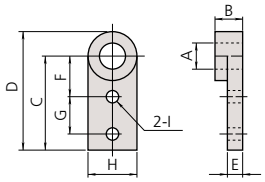

Order No.	303563	303572	303582
A	ø9.5	ø9.5	ø10
B	6	11.5	11.5
C	30	40	40
D	37.5	50	50
E	4.5	6.5	6.5
F	15	18	18
G	10	15	15
H	15	20	20
I	ø3.4	ø4.5	ø4.5

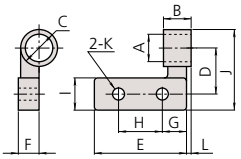

Order No.	303565	303574	303584
A	ø9.5	ø9.5	ø10
B	6	11.5	11.5
C	ø15	ø15	ø15
D	15	20	20
E	25	40	40
F	8.5	8.5	8.5
G	7.5	10	10
H	10	20	20
I	10	15	15
J	27.5	35	35
K	ø3.4	ø4.5	ø4.5
L	0.75	1.25	1.25

Mitutoyo

Quick Guide to Precision Measuring Instruments

Micrometer Heads

Key Factors in Selection

Key factors in selecting a micrometer head are the measuring range, spindle face, stem, graduations, thimble diameter, etc.

Stem

Plain stem

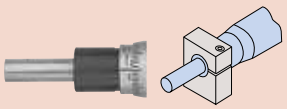

Stem locknut type

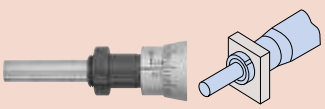

- The stem used to mount a micrometer head is classified as a "plain type" or "clamp nut type" as illustrated above. The stem diameter is manufactured to a nominal Metric or Imperial size with an h6 tolerance.
- The clamp nut stem allows fast and secure clamping of the micrometer head. The plain stem has the advantage of wider application and slight positional adjustment in the axial direction on final installation, although it does requires a split-fixture clamping arrangement or adhesive fixing.
- General-purpose mounting fixtures are available as optional accessories.

Measuring Face

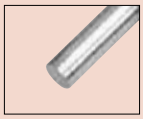

Flat face

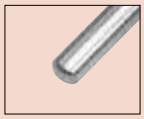

Spherical face

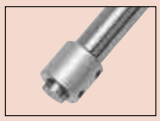

Anti-rotation device

- A flat measuring face is often specified where a micrometer head is used in measurement applications.
- When a micrometer head is used as a feed device, a spherical face can minimize errors due to misalignment (Figure A). Alternatively, a flat face on the spindle can bear against a sphere, such as a carbide ball (Figure B).
- A non-rotating spindle type micrometer head or one fitted with an anti-rotation device on the spindle (Figure C) can be used if a twisting action on the workpiece must be avoided.
- If a micrometer head is used as a stop then a flat face both on the spindle and the face it contacts provides durability.

Figure A

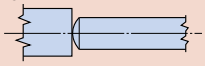

Figure B

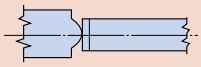

Figure C

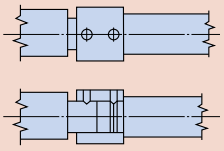

Non-Rotating Spindle

- A non-rotating spindle type head does not exert a twisting action on a workpiece, which may be an important factor in some applications.

Spindle Thread Pitch

- The standard type head has 0.5mm pitch.
- 1mm-pitch type: quicker to set than standard type and avoids the possibility of a 0.5mm reading error. Excellent load-bearing characteristics due to larger screw thread.
- 0.25mm or 0.1mm-pitch type
  This type is the best for fine-feed or fine-positioning applications.

Constant-force Device

- A micrometer head fitted with a constant-force device (ratchet or friction thimble) is recommended for measurement applications.
- If using a micrometer head as a stop, or where saving space is a priority, a head without a ratchet is probably the best choice.

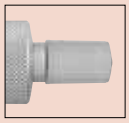

Micrometer head with constant-force device

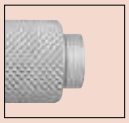

Micrometer head without constant-force device (no ratchet)

Spindle Lock

- If a micrometer head is used as a stop it is desirable to use a head fitted with a spindle lock so that the setting will not change even under repeated shock loading.

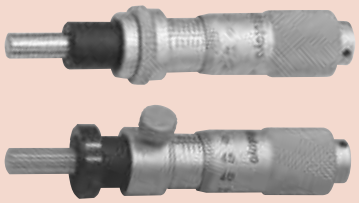

Measuring Range (Stroke)

- When choosing a measuring range for a micrometer head, allow an adequate margin in consideration of the expected measurement stroke. Six stroke ranges, 5 to 50mm, are available for standard micrometer heads.
- Even if an expected stroke is small, such as 2mm to 3mm, it will be cost effective to choose a 25mm-stroke model as long as there is enough space for installation.
- If a long stroke of over 50mm is required, the concurrent use of a gauge block can extend the effective measuring range. (Figure D)

Figure D

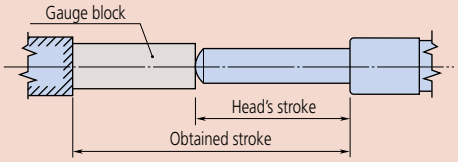

- In this guide, the range (or stroke end) of the thimble is indicated by a dashed line. For stroke ends, consider the thimble as moving to the position indicated by the line when designing the jig.

Ultra-fine Feed Applications

- Dedicated micrometer heads are available for manipulator applications, etc., which require ultra-fine feed or adjustment of spindle.



Holtest ABSOLUTE Borematic

Inside Micrometers

Bore Gages

INDEX

Holtest	
Digimatic Holtest	C-2,3
Holtest	C-4,5
Holtest (Type II)	C-6,7
Borematic	C-8,9
Holtest/Digimatic Holtest/Borematic	C-10
Inside Micrometers	
Tubular Inside Micrometers	C-11,12
Inside Micrometers	C-13
Digimatic Tubular Inside Micrometers	C-14
Tubular Inside Micrometers	C-15-17
Inside Micrometers	C-18
Inside Micro Checker	C-19
Bore Gages	
Bore Gages	C-20-26
ABSOLUTE Digimatic Bore Gage	C-27
Bore Gages	C-28
Bore Gage Zero Checker	C-29
Setting Rings	C-29,30

Digimatic Holtest

SERIES 468 — Three-Point Internal Micrometers

FEATURES

- TiN-coated measuring contact points provide excellent durability and impact resistance and allow the instrument to measure to the bottom of a blind hole (up to 100mm / 4″models).
- Large LCD readout.
- Functions available: Presetting, Zero/ABS, Auto power On/Off, Data hold, Data output, Error alarm, Battery replacement alarm.
- With Ratchet Stop for constant force.
- Measure deep holes by attaching an extension rod (optional).
- Setting rings for origin point setting are optional.
- Supplied in fitted plastic case up to 100mm / 4″. Over 100mm / 4″ supplied in wooden case.



468-261



468-263



468-274



TiN-coated contact points
("-10" suffix models only)

DIMENSIONS AND MASS

Unit: mm

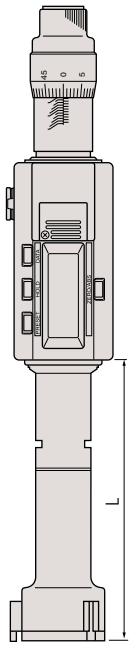

Range	L	Mass (g)
6 - 8mm / .275 - .35″	59	400
8 - 10mm / .35 - .425″	59	400
10 - 12mm / .425 - .5″	59	400
12 - 16mm / .5 - .65″	84	430
16 - 20mm / .65 - .8″	84	430
20 - 25mm / .8 - 1"	93	500
25 - 30mm / 1 - 1.2"	93	510
30 - 40mm / 1.2 - 1.6"	103.8	510
40 - 50mm / 1.6 - 2"	103.8	530
50 - 63mm / 2 - 2.5"	105.4	650
62 - 75mm / 2.5 - 3.0"	105.4	660
75 - 88mm / 3.0 - 3.5"	105.4	990
87 - 100mm / 3.5 - 4.0"	105.4	1000
100 - 125mm / 4 - 5"	151.4	970
125 - 150mm / 5 - 6"	151.4	1060
150 - 175mm / 6 - 7"	151.4	1150
175 - 200mm / 7 - 8"	151.4	1240
200 - 225mm / 8 - 9"	151.4	1330
225 - 250mm / 9 - 10"	151.4	1420
250 - 275mm / 10 - 11"	151.4	1510
275 - 300mm / 11 - 12"	151.4	1600

Measuring a Blind Hole

The measuring contact points held in the jaws permit measuring the diameter of a blind hole to the bottom.
(up to 100mm / 4″models)

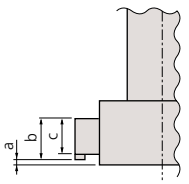

Range	a	b	c
6 - 12mm / .275 - .5″	2	—	2.5
12 - 20mm / .5 - .8″	0.3	5.6	3.5
20 - 30mm / .8 - 1.2″	0.3	8.3	5.2
30 - 50mm / 1.2 - 2"	0.3	13	10
50 - 100mm / 2 - 4"	0.3	17	14
100 - 300mm / 4 - 12"	12.4	21	13.8

Technical Data

Accuracy: Refer to the list of specifications.
Resolution: 0.001mm or .00005"/0.001mm
(over 4 - 5" models: .0001"/0.001mm)
Contact point: TiN coating
Measuring method: Three-point method
Display: LCD
Battery: SR44 (2 pcs.), **938882**
Battery life: Approx. 1.2 years under normal use

Function

Zero/ABS, Auto Power On/Off, Data hold, Data output, Preset, inch/mm conversion (on inch/metric models only)
Alarm: Low voltage, Counting value composition error

Optional Accessories

05CZA662: SPC cable (1m / 40″)
05CZA663: SPC cable (2m / 80″)
04AZB157: Mounting plate for stand
156-101-10: Stand

952322: Extension rod 100mm / 3.94″
For range 6-12mm / .275 - .5″ models

952621: Extension rod 150mm / 5.9″
For range 12-20mm / .5" - .8″ models

952622: Extension rod 150mm / 5.9″
For range 20-50mm / .8" - 2″ models

952623: Extension rod 150mm / 5.9″
For range 50-300mm / 2" - 12″ models





04AZB157

SPECIFICATIONS

Metric ☐ with TiN-coated contact points

Range	Accuracy	Order Code	
		Individual	Main Body Assembly
6-8	±2µm	**468-161**	04AZB106
8-10		**468-162**	
10-12		**468-163**	
12-16		**468-164**	04AZB107
16-20		**468-165**	
20-25	±3µm	**468-166**	04AZB108
25-30		**468-167**	
30-40		**468-168**	
40-50		**468-169**	
50-63		**468-170**	04AZB109
62-75		**468-171**	
75-88		**468-172**	
87-100		**468-173**	
100-125	±5µm	**468-174**	04AZB110
125-150		**468-175**	
150-175		**468-176**	
175-200		**468-177**	
200-225		**468-178**	
225-250		**468-179**	
250-275		**468-180**	
275-300		**468-181**	

Inch/Metric ☐ with TiN-coated contact points

Range	Accuracy	Order Code	
		Individual	Main Body Assembly
.275-.35"/6.925-8.89mm	±.0001"	**468-261**	04AZB111
.35-.425"/8.89-10.795mm		**468-262**	
.425-.5"/10.795-12.7mm		**468-263**	
.5-.65"/12.7-16.51mm		**468-264**	04AZB112
.65-.8"/16.51-20.32mm		**468-265**	
.8-1"/20.32-25.4mm	±.00015"	**468-266**	04AZB113
1-1.2"/25.4-30.48mm		**468-267**	
1.2-1.6"/30.48-40.64mm		**468-268**	
1.6-2"/40.64-50.8mm		**468-269**	
2-2.5"/50.8-63.5mm		**468-270**	04AZB114
2.5-3"/63.5-76.2mm		**468-271**	
3-3.5"/76.2-88.9mm		**468-272**	
3.5-4"/88.9-101.6mm		**468-273**	
4-5"/101.6-127mm	±.00025"	**468-274**	04AZB115
5-6"/127-152.4mm		**468-275**	
6-7"/152.4-177.8mm		**468-276**	
7-8"/177.8-203.2mm		**468-277**	
8-9"/203.2-228.6mm		**468-278**	
9-10"/228.6-254mm		**468-279**	
10-11"/254-279.4mm		**468-280**	
11-12"/279.4-304.8mm		**468-281**	



468-986

Complete Unit Set

Each set includes complete gages (display units and measuring heads for each size).

Metric ☐ with TiN-coated contact points

Range	Order No.	Individual range	Setting rings included	Remarks
6 - 12mm	**468-981**	6-8, 8-10, 10-12mm	ø8mm, ø10mm	—
12 - 25mm	**468-982**	12-16, 16-20, 20-25mm	ø16mm, ø20mm	—
25 - 50mm	**468-983**	25-30, 30-40, 40-50mm	ø30mm, ø40mm	—
50 - 75mm	**468-984**	50-63, 62-75mm	ø62mm	—
75 - 100mm	**468-985**	75-88, 87-100mm	ø87mm	—

Inch/Metric ☐ with TiN-coated contact points

Range	Order No.	Individual range	Setting rings included	Remarks
.275 - .5" / 6.925 - 12.7mm	**468-986**	.275-.35", .35-.425", .425-.5"	.35" DIA., .425" DIA.	—
.5 - 1" / 12.7 - 25.4mm	**468-987**	.5-.65", .65-.8", .8-1"	.65" DIA., .8" DIA.	—
1 - 2" / 25.4 - 50.8mm	**468-988**	1-1.2", 1.2-1.6", 1.6-2"	1.2" DIA., 1.6" DIA.	—
2 - 3" / 50.8 - 76.2mm	**468-989**	2-2.5", 2.5-3"	2.5" DIA.	—
3 - 4" / 76.2 - 101.6mm	**468-990**	3-3.5", 3.5-4"	3.5" DIA.	—



468-978

Interchangeable Head Set

Each set includes one display unit with interchangeable measuring heads of the sizes specified.

Metric ☐ with TiN-coated contact points

Range	Order No.	Individual range	Setting rings included	Remarks
6 - 12mm	**468-971**	6-8, 8-10, 10-12mm	ø8mm, ø10mm	with extension rod
12 - 20mm	**468-972**	12-16, 16-20mm	ø16mm.	with extension rod
20 - 50mm	**468-973**	20-25, 25-30, 30-40, 40-50mm	ø25mm, ø40mm	with extension rod
50 - 100mm	**468-974**	50-63, 62-75, 75-88, 87-100mm	ø62mm, ø87mm	with extension rod
100 - 200mm	**468-975**	100-125, 125-150, 150-175, 175-200mm	ø125mm, ø175mm	with extension rod

Inch/Metric ☐ with TiN-coated contact points

Range	Order No.	Individual range	Setting rings included	Remarks
.275 - .5" / 6.925 - 12.7mm	**468-976**	.275-.35", .35-.425", .425-.5"	.35" DIA., .425" DIA.	with extension rod
.5 - .8" / 12.7 - 20.32mm	**468-977**	.5-.65", .65-.8"	.65" DIA.	with extension rod
.8 - 2" / 20.32 - 50.8mm	**468-978**	.8-1", 1-1.2", 1.2-1.6", 1.6-2"	1" DIA., 1.6" DIA.	with extension rod
2 - 4" / 50.8 - 101.6mm	**468-979**	2-2.5", 2.5-3", 3-3.5", 3.5-4"	2.5" DIA., 3.5" DIA	with extension rod
4 - 8" / 101.6 - 203.2mm	**468-980**	4-5", 5-6", 6-7", 7-8"	5" DIA., 7" DIA.	with extension rod

Mitutoyo

Holtest

SERIES 368 — Three-Point/Two-Point Internal Micrometers

These Holtests are versatile, self-centering three-point internal micrometers for the accurate and efficient direct-measurement of internal diameters. Three anvils, evenly spaced at 120° apart, contact the internal wall surfaces and find true alignment with the axis of the bore for accurate ID measurement.

368-268



368-174

FEATURES

- TiN-coated measuring contact points (over 6mm / .275″ range models) provide excellent durability and impact resistance and allow the instrument to measure to the bottom of a blind hole (up to 100mm / 4″models).
- Highly durable because of carbide-tipped contact points (anvils up to 12mm / .5″models).
- Measure deep holes using an extension rod (optional) which is available on models over 6mm (.275") measuring range.
- With Ratchet Stop for constant force.
- Setting rings for zero point adjustment are optional.
- Supplied in fitted plastic case up to 100mm / 4″. Over 100mm / 4″ supplied in wooden case.



368-001

Two-point contact type



TiN-coated contact points (excluding models up to 12mm/.5")

DIMENSIONS

Unit: mm

Measuring a Blind Hole

The measuring contact points held in the jaws permit measuring the diameter of a blind hole right down to the bottom (up to 100mm / 4″models).

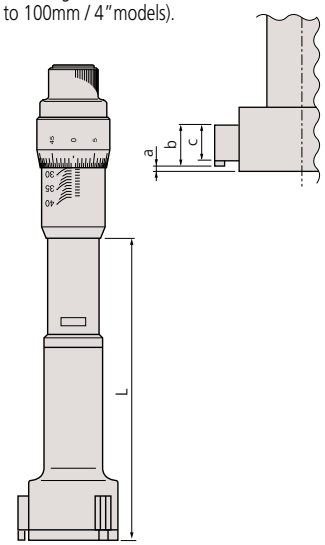

Range	L	Mass (g)
2 - 2.5mm / .08 - .1″	12	88
2.5 - 3mm / .1 - .12"	12	88
3 - 4mm / .12 - .16"	22	91
4 - 5mm / .16 - .2"	22	91
5 - 6mm / .2 - .24"	22	91
6 - 8mm / .275 - .35"	59	57
8 - 10mm / .35 - .425"	59	58
10 - 12mm / .425 - .5"	59	59
12 - 16mm / .5 - .65"	82	140
16 - 20mm / .65 - .8"	82	145
20 - 25mm / .8 - 1"	94	250
25 - 30mm / 1 - 1.2"	94	270
30 - 40mm / 1.2 - 1.6"	102	290

Range	L	Mass (g)
40 - 50mm / 1.6 - 2"	102	330
50 - 63mm / 2 - 2.5"	105	440
62 - 75mm / 2.5 - 3"	105	450
75 - 88mm / 3 - 3.5"	105	490
87 - 100mm / 3.5 - 4"	105	500
100 - 125mm / 4 - 5"	161	1050
125 - 150mm / 5 - 6"	161	1120
150 - 175mm / 6 - 7"	161	1190
175 - 200mm / 7 - 8"	161	1260
200 - 225mm / 8 - 9"	161	1420
225 - 250mm / 9 - 10"	161	1580
250 - 275mm / 10 - 11"	161	1600
275 - 300mm / 11 - 12"	161	1690

Range	a	b	c
2 - 6mm / .08 - .275″	—	—	2
6 - 12mm / .275 - .5″	2	—	2.5
12 - 20mm / .5 - .8"	0.3	5.6	3.5
20 - 30mm / .8 - 1.2"	0.3	8.3	5.2
30 - 50mm / 1.2 - 2"	0.3	13	10
50 - 100mm / 2 - 4"	0.3	17	14
100 - 300mm / 4 - 12"	12.4	21	13.8

Mitutoyo guarantees the product quality. PROPRIETARY INSPECTION CERTIFICATE Mitutoyo guarantees the product quality.

Technical Data

Graduation: 0.001mm, 0.005mm*, .0001" or .0002"* (*over 12mm or .5″ models)

Range	Measuring method	Contact-point material
2-6mm/.08-.28″	Two-point method	Carbide
6-300mm/.275-12″	Three-point method	TiN coating (1700-2000HV)

Optional Accessories

952322: Extension rod 100mm / 3.94″
For range 6-12mm / .275-.5″ models

952621: Extension rod 150mm / 5.9″
For range 12-20mm / .5" - .8″ models

952622: Extension rod 150mm / 5.9″
For range 20-50mm / .8" - 2″ models

952623: Extension rod 150mm / 5.9″
For range 50-300mm / 2"-12″ models

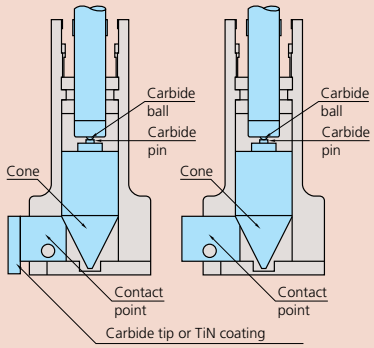



Using the optional extension rod



SPECIFICATIONS

Metric Individual ☐ with TiN-coated contact points

Range	Order No.	Accuracy
2 - 2.5mm	**368-001**	±2µm
2.5 - 3mm	**368-002**	±2µm
3 - 4mm	**368-003**	±2µm
4 - 5mm	**368-004**	±2µm
5 - 6mm	**368-005**	±2µm
6 - 8mm	**368-161**	±2µm
8 - 10mm	**368-162**	±2µm
10 - 12mm	**368-163**	±2µm
12 - 16mm	**368-164**	±2µm
16 - 20mm	**368-165**	±2µm
20 - 25mm	**368-166**	±3µm
25 - 30mm	**368-167**	±3µm
30 - 40mm	**368-168**	±3µm
40 - 50mm	**368-169**	±3µm
50 - 63mm	**368-170**	±3µm
62 - 75mm	**368-171**	±3µm
75 - 88mm	**368-172**	±3µm
87 - 100mm	**368-173**	±3µm
100 - 125mm	**368-174**	±5µm
125 - 150mm	**368-175**	±5µm
150 - 175mm	**368-176**	±5µm
175 - 200mm	**368-177**	±5µm
200 - 225mm	**368-178**	±5µm
225 - 250mm	**368-179**	±5µm
250 - 275mm	**368-180**	±5µm
275 - 300mm	**368-181**	±5µm

Inch Individual ☐ with TiN-coated contact points

Range	Order No.	Accuracy
.08 - .1"	**368-021**	±.0001"
.1 - .12"	**368-022**	±.0001"
.12 - .16"	**368-023**	±.0001"
.16 - .2"	**368-024**	±.0001"
.2 - .24"	**368-025**	±.0001"
.24 - .28"	**368-026**	±.0001"
.275 - .35"	**368-261**	±.0001"
.35 - .425"	**368-262**	±.0001"
.425 - .5"	**368-263**	±.0001"
.5 - .65"	**368-264**	±.0001"
.65 - .8"	**368-265**	±.0001"
.8 - 1"	**368-266**	±.00015"
1 - 1.2"	**368-267**	±.00015"
1.2 - 1.6"	**368-268**	±.00015"
1.6 - 2"	**368-269**	±.00015"
2 - 2.5"	**368-270**	±.00015"
2.5 - 3"	**368-271**	±.00015"
3 - 3.5"	**368-272**	±.00015"
3.5 - 4"	**368-273**	±.00015"
4 - 5"	**368-274**	±.00025"
5 - 6"	**368-275**	±.00025"
6 - 7"	**368-276**	±.00025"
7 - 8"	**368-277**	±.00025"
8 - 9"	**368-278**	±.00025"
9 - 10"	**368-279**	±.00025"
10 - 11"	**368-280**	±.00025"
11 - 12"	**368-281**	±.00025"

Complete Unit Set

Each set includes complete gages (micrometer head units and measuring heads for each size).

Metric ☐ with TiN-coated contact points

Range	Order No.	Individual range	Setting rings included	Remarks
2 - 3mm	**368-906**	2-2.5, 2.5-3mm	ø2.5mm	—
3 - 6mm	**368-907**	3-4, 4-5, 5-6mm	ø4mm, ø5mm	—
6 - 12mm	**368-911**	6-8, 8-10, 10-12mm	ø8mm, ø10mm	with extension rod
12 - 20mm	**368-912**	12-16, 16-20mm	ø16mm	with extension rod
20 - 50mm	**368-913**	20-25, 25-30, 30-40, 40-50mm	ø25mm, ø40mm	with extension rod
50 - 100mm	**368-914**	50-63, 62-75, 75-88, 87-100mm	ø62mm, ø87mm	with extension rod
100 - 200mm	**368-915**	100-125, 125-150, 150-175, 175-200mm	ø125mm, ø175mm	with extension rod

Inch ☐ with TiN-coated contact points

Range	Order No.	Individual range	Setting rings included	Remarks
.08" - .12"	**368-926**	.08-.1", .1-.12"	.1" DIA.	—
.12" - .28"	**368-927**	.12-.16", .16-.2", .2-.24", .24-.28"	.16" DIA., .24" DIA.	—
.275" - .5"	**368-916**	.275-.35", .35-.425", .425-.5"	.35" DIA., .5" DIA.	with extension rod
.5" - .8"	**368-917**	.5-.65", .65-.8"	.65" DIA.	with extension rod
.8" - 2"	**368-918**	.8-1", 1-1.2", 1.2-1.6", 1.6-2"	1" DIA., 1.6" DIA.	with extension rod
2" - 4"	**368-919**	2-2.5", 2.5-3", 3-3.5", 3.5-4"	2.5" DIA., 3.5" DIA.	with extension rod
4" - 8"	**368-920**	4-5", 5-6", 6-7", 7-8"	5" DIA., 7" DIA.	with extension rod

*.0001" graduation

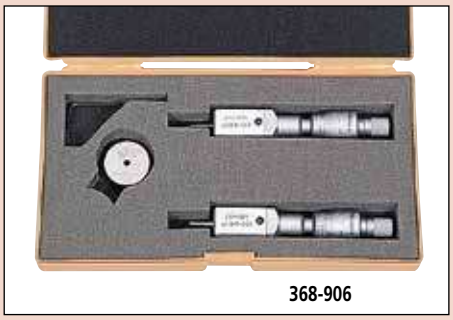

368-906

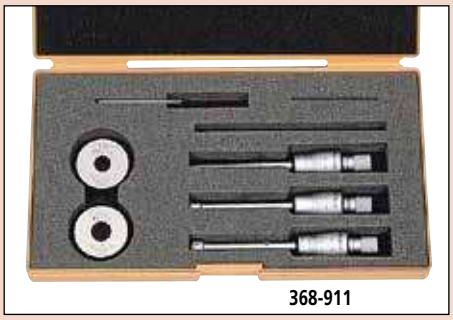

368-911

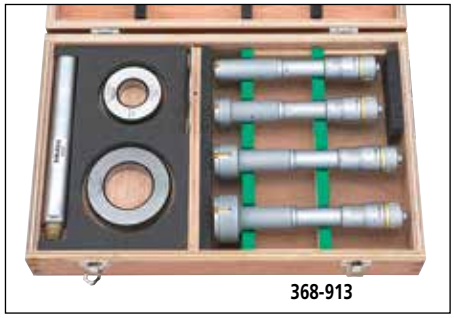

368-913

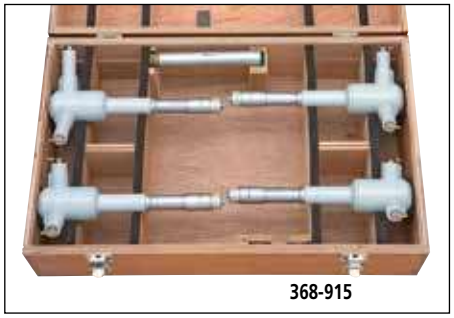

368-915

Mitutoyo

Holtest (Type II)

SERIES 368 — Three-Point Internal Micrometers

FEATURES

- The Holtests (type II) have three contact points made of alloy steel.
- Measurement can be taken closer to the bottom of the blind bore (up to 100mm / 4″models).
- Measure deep holes using an extension rod (optional).
- With Ratchet Stop for constant force.
- Setting rings for origin point settings are optional.
- Supplied in fitted plastic case up to 100mm / 4″. Over 100mm / 4″ supplied in wooden case.



368-869



368-770



368-774

DIMENSIONS AND MASS

Unit: mm

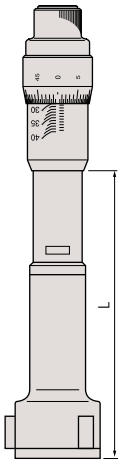

Range	L	Mass (g)
12 - 16mm / .5 - .65″	82	150
16 - 20mm / .65 - .8"	82	150
20 - 25mm / .8 - 1"	94	260
25 - 30mm / 1 - 1.2"	94	280
30 - 40mm / 1.2 - 1.6"	102	290
40 - 50mm / 1.6 - 2"	102	330
50 - 63mm / 2 - 2.5"	105	440
62 - 75mm / 2.5 - 3"	105	450
75 - 88mm / 3 - 3.5"	105	560
87 - 100mm / 3.5 - 4"	105	570
100 - 125mm / 4 - 5"	161	1020
125 - 150mm / 5 - 6"	161	1110
150 - 175mm / 6 - 7"	161	1200
175 - 200mm / 7 - 8"	161	1300
200 - 225mm / 8 - 9"	161	1420
225 - 250mm / 9 - 10"	161	1540
250 - 275mm / 10 - 11"	161	1690
275 - 300mm / 11 - 12"	161	1860

Measuring a Blind Hole

The measuring contact points held in the jaws permit measuring the diameter of a blind hole right down to the bottom (up to 100mm / 4″models).

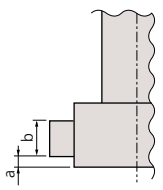

Range	a	b
12 - 20mm / .5 - .8"	2.6	3.5
20 - 30mm / .8 - .12"	3.4	5.2
30 - 50mm / 1.2 - 2"	3.4	10
50 - 100mm / 2 - 4"	3.4	14
100 - 300mm / 4 - 12"	19.6	13.8

Mitutoyo guarantees the product quality. PROPRIETARY INSPECTION CERTIFICATE Mitutoyo guarantees the product quality.

Technical Data

Graduation: 0.005mm or .0002"
Measuring method: Three-point method
Contact point: Hardened steel (over HRC 60)

Optional Accessories

952621: Extension rod 150mm / 5.9″
For range 12-20mm / .5 - .8″ models

952622: Extension rod 150mm / 5.9″
For range 20-50mm / .8 - 2″ models

952623: Extension rod 150mm / 5.9″
For range 50-300mm / 2 - 12″ models

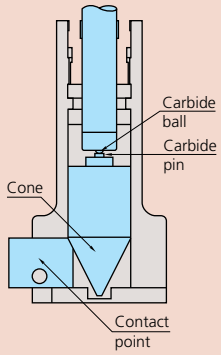

HT (Type II)

Head Assy Order No.	Measuring Range	HT (type II) Order No.
04AZA839	12 - 16mm	**368-764**
04AZA840	16 - 20mm	**368-765**
04AZA848	20 - 25mm	**368-766**
04AZA849	25 - 30mm	**368-767**
04AZA857	30 - 40mm	**368-768**
04AZA858	40 - 50mm	**368-769**
04AZA870	50 - 63mm	**368-770**
04AZA871	62 - 75mm	**368-771**
04AZA872	75 - 88mm	**368-772**
04AZA873	87 - 100mm	**368-773**
04AZA895	100 - 125mm	**368-774**
04AZA896	125 - 150mm	**368-775**
04AZA897	150 - 175mm	**368-776**
04AZA898	175 - 200mm	**368-777**
04AZA899	200 - 225mm	**368-778**
04AZA900	225 - 250mm	**368-779**
04AZA901	250 - 275mm	**368-780**
04AZA902	275 - 300mm	**368-781**
04AZA841	.5 - .65"	**368-864**
04AZA842	.65 - .8"	**368-865**
04AZA850	.8 - 1"	**368-866**
04AZA851	1 - 1.2"	**368-867**
04AZA859	1.2 - 1.6"	**368-868**
04AZA860	1.6 - 2"	**368-869**
04AZA874	2 - 2.5"	**368-870**
04AZA875	2.5 - 3"	**368-871**
04AZA876	3 - 3.5"	**368-872**
04AZA877	3.5 - 4"	**368-873**
04AZA903	4 - 5"	**368-874**
04AZA904	5 - 6"	**368-875**
04AZA905	6 - 7"	**368-876**
04AZA906	7 - 8"	**368-877**
04AZA907	8 - 9"	**368-878**
04AZA908	9 - 10"	**368-879**
04AZA909	10 - 11"	**368-880**
04AZA910	11 - 12"	**368-881**

SPECIFICATIONS

Metric Individual

Range	Order No.	Accuracy
12 - 16mm	**368-764**	±2µm
16 - 20mm	**368-765**	±2µm
20 - 25mm	**368-766**	±3µm
25 - 30mm	**368-767**	±3µm
30 - 40mm	**368-768**	±3µm
40 - 50mm	**368-769**	±3µm
50 - 63mm	**368-770**	±3µm
62 - 75mm	**368-771**	±3µm
75 - 88mm	**368-772**	±3µm
87 - 100mm	**368-773**	±3µm
100 - 125mm	**368-774**	±5µm
125 - 150mm	**368-775**	±5µm
150 - 175mm	**368-776**	±5µm
175 - 200mm	**368-777**	±5µm
200 - 225mm	**368-778**	±5µm
225 - 250mm	**368-779**	±5µm
250 - 275mm	**368-780**	±5µm
275 - 300mm	**368-781**	±5µm

Inch Individual

Range	Order No.	Accuracy
.5 - .65"	**368-864**	±.0001"
.65 - .8"	**368-865**	±.0001"
.8 - 1"	**368-866**	±.00015"
1 - 1.2"	**368-867**	±.00015"
1.2 - 1.6"	**368-868**	±.00015"
1.6 - 2"	**368-869**	±.00015"
2 - 2.5"	**368-870**	±.00015"
2.5 - 3"	**368-871**	±.00015"
3 - 3.5"	**368-872**	±.00015"
3.5 - 4"	**368-873**	±.00015"
4 - 5"	**368-874**	±.00025"
5 - 6"	**368-875**	±.00025"
6 - 7"	**368-876**	±.00025"
7 - 8"	**368-877**	±.00025"
8 - 9"	**368-878**	±.00025"
9 - 10"	**368-879**	±.00025"
10 - 11"	**368-880**	±.00025"
11 - 12"	**368-881**	±.00025"

Complete Unit Set

Each set includes complete gages (micrometer head units and measuring heads for each size).

Metric

Range	Order No.	Individual range	Setting rings included	Remarks
12 - 20mm	**368-991**	12-16, 16-20mm	ø16mm	with extension rod
20 - 50mm	**368-992**	20-25, 25-30, 30-40, 40-50mm	ø25mm, ø40mm	with extension rod
50 - 100mm	**368-993**	50-63, 62-75, 75-88, 87-100mm	ø62mm, ø87mm	with extension rod
100 - 200mm	**368-994**	100-125, 125-150, 150-175, 175-200mm	ø125mm, ø175mm	with extension rod

Inch

Range	Order No.	Individual range	Setting rings included	Remarks
.5" - .8"	**368-995**	.5-.65", .65-.8"	.65" DIA.	with extension rod
.8" - 2"	**368-996**	.8-1", 1-1.2", 1.2-1.6", 1.6-2"	1" DIA., 1.6" DIA.	with extension rod
2" - 4"	**368-997**	2-2.5", 2.5-3", 3-3.5", 3.5-4"	2.5" DIA., 3.5" DIA.	with extension rod
4" - 8"	**368-998**	4-5", 5-6", 6-7", 7-8"	5" DIA., 7" DIA.	with extension rod


368-991


368-992


368-993


368-994

Borematic

SERIES 568 — ABSOLUTE Digimatic Snap Bore Gages

The Borematic enables the operator to take measurements more accurately and quicker than ever before. Once the origin point is set with the ORIGIN button, the Borematic retains the setting for the entire battery life, therefore, no longer repeated origin setting (presetting) is necessary.



568-364



568-368

FEATURES

- TiN-coated measuring contact points provide excellent durability and impact resistance and allow the instrument to measure to the bottom of a blind hole.
- Large LCD digits of 8.5mm height for easy reading.
- 330-degree rotatable display unit for easy reading at any angle.
- Go/no-go judgment function.
- The ABSOLUTE linear encoder eliminates over-speed errors.
- With SPC data output.
- Setting rings for origin point setting are optional.
- Measure deep holes by attaching an optional extension rod.
- Measurement can be taken closer to the bottom of a blind bore.
- Supplied in fitted wooden case.



TiN-coated contact points ("-10" suffix models only)

SPC

Mitutoyo guarantees the product quality. PROPRIETARY INSPECTION CERTIFICATE Mitutoyo guarantees the product quality.

ABSOLUTE®
Absolute System Patented by MITUTOYO

Technical Data

Accuracy: Refer to the list of specifications.

Resolution: 0.001mm or .00005"/0.001mm
Contact point: Carbide or TiN coating*
(*over 12mm/.5" models)
Measuring method: Three-point method
Display: LCD
Battery: SR44 (1 pc.) (**938882**)
Battery life: Approx. 7,000 hours

Functions

Zero/ABS, presetting, go/no-go judgment, power on/off, inch/mm conversion (on inch/metric models only), SPC data output, data hold

Optional Accessories

905338: SPC cable (1m / 40")
905409: SPC cable (2m / 80")

952322: Extension rod 100mm / 3.94"
For range 6-12mm / .275-.5" models

952621: Extension rod 150mm / 5.9"
For range 12-20mm / .5" - .8" models

952622: Extension rod 150mm / 5.9"
For range 20-50mm / .8" - 2" models

952623: Extension rod 150mm / 5.9"
For range 50-300mm / 2"-12" models

– – – – : Setting ring (See page C-29.)



SPECIFICATIONS

Metric Individual

Range	Order No.	Accuracy	Mass (g)
6 - 8mm	**568-361**	±5µm	480
8 - 10mm	**568-362**	±5µm	485
10 - 12mm	**568-363**	±5µm	485
12 - 16mm	**568-364**	±5µm	475
16 - 20mm	**568-365**	±5µm	480
20 - 25mm	**568-366**	±6µm	540
25 - 30mm	**568-367**	±6µm	555
30 - 40mm	**568-368**	±6µm	565
40 - 50mm	**568-369**	±6µm	610
50 - 63mm	**568-370**	±6µm	730
62 - 75mm	**568-371**	±6µm	740
75 - 88mm	**568-372**	±6µm	790
87 - 100mm	**568-373**	±6µm	800
100 - 113mm	**568-374**	±6µm	900
112 - 125mm	**568-375**	±6µm	910

Inch/Metric

Range	Order No.	Accuracy	Mass (g)
.275 - .350" / 6.985 - 8.89mm	**568-461**	±.00025"	480
.350 - .425" / 8.89 - 10.795mm	**568-462**	±.00025"	485
.425 - .5" / 10.795 - 12.7mm	**568-463**	±.00025"	485
.50 - .65" / 12.7 - 16.51mm	**568-464**	±.00025"	475
.65 - .80" / 16.51 - 20.32mm	**568-465**	±.00025"	480
.8 - 1.0" / 20.32 - 25.4mm	**568-466**	±.0003"	540
1.0 - 1.2" / 25.4 - 30.48mm	**568-467**	±.0003"	555
1.2 - 1.6" / 30.48 - 40.64mm	**568-468**	±.0003"	565
1.6 - 2.0" / 40.64 - 50.8mm	**568-469**	±.0003"	610
2.0 - 2.5" / 50.8 - 63.5mm	**568-470**	±.0003"	730
2.5 - 3.0" / 63.5 - 76.2mm	**568-471**	±.0003"	740
3.0 - 3.5" / 76.2 - 88.9mm	**568-472**	±.0003"	790
3.5 - 4.0" / 88.9 - 101.6mm	**568-473**	±.0003"	800
4.0 - 4.5" / 101.6 - 114.3mm	**568-474**	±.0003"	900
4.5 - 5.0" / 114.3 - 127mm	**568-475**	±.0003"	910

Interchangeable Contact Head Set



Complete Unit Set



DIMENSIONS

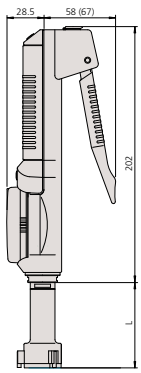

Measuring a Blind Hole

The measuring pins held in the jaws permit measuring the diameter of a blind hole right down to the bottom.

Unit: mm

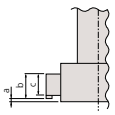

Range	L	a	b	c
6 - 12mm / .275 - .5"	83	2	—	2.5
12 - 20mm / .5 - .8"	53	0.3	5.6	3.5
20 - 30mm / .8 - 1.2"	59	0.3	8.3	5.2
30 - 50mm / 1.2 - 2"	67	0.3	13	10
50 - 125mm / 2 - 5"	75	0.3	17	14

( ): 50-125mm model

Complete Unit Set

Each set includes complete gage display units and measuring heads for each size and extension rod.

Metric

Range	Set Order No.	Individual Order No.	Setting rings included
6 - 12mm	**568-955**	**568-361, 568-362** **568-363**	**177-125** (ø8mm) **177-126** (ø10mm)
12 - 25mm	**568-956**	**568-364, 568-365** **568-366**	**177-177** (ø16mm) **177-286** (ø20mm)
25 - 50mm	**568-957**	**568-367, 568-368** **568-369**	**177-139** (ø25mm) **177-290** (ø40mm)
50 - 75mm	**568-958**	**568-370** **568-371**	**177-314** (ø62mm)
75 - 100mm	**568-959**	**568-372** **568-373**	**177-318** (ø87mm)

Inch/Metric

Range	Set Order No.	Individual Order No.	Setting rings included
.275" - .5" / 6.985 - 12.7mm	**568-965**	**568-461, 568-462** **568-463**	**177-179** (.35" DIA.) **177-283** (.425" DIA.)
.5" - 1" / 12.7 - 25.4mm	**568-966**	**568-464, 568-465** **568-466**	**177-182** (.65" DIA.) **177-287** (.8" DIA.)
1" - 2" / 25.4 - 50.8mm	**568-967**	**568-467, 568-468** **568-469**	**177-289** (1.2" DIA.) **177-291** (1.6" DIA.)
2" - 3" / 50.8 - 76.2mm	**568-968**	**568-470** **568-471**	**177-315** (2.5" DIA.)
3" - 4" / 76.2 - 101.6mm	**568-969**	**568-472** **568-473**	**177-319** (3.5" DIA.)

Interchangeable Head Set

Each set includes one display unit with interchangeable measuring heads of the sizes specified and extension rod.

Metric

Range	Set Order No.	Display Unit	Adaptor Supplied	Individual Head No.	Setting rings included
6 - 12mm	**568-924**	**568-014**	**954595**	**04AZB136** **04AZB137** **04AZB138**	**177-125** (ø8mm) **177-126** (ø10mm)
12 - 25mm	**568-925**	**568-014**	**216556**	**04AZA719** **04AZA720**	**177-177** (ø16mm) **177-286** (ø20mm)
			216557	**04AZA728**	
25 - 50mm	**568-926**	**568-014**	**216557**	**04AZA729** **04AZA737** **04AZA738**	**177-288** (ø30mm) **177-290** (ø40mm)
50 - 100mm	**568-927**	**568-014**	**216558**	**04AZA750, 04AZA751, 04AZA752** **04AZA753**	**177-314** (ø62mm) **177-318** (ø87mm)

Inch/Metric

Range	Set Order No.	Display Unit	Adaptor Supplied	Individual Head No.	Setting rings included
.275" - .5" / 6.985 - 12.7mm	**568-928**	**568-015**	**954595**	**04AZB139** **04AZB140** **04AZB141**	**177-179** (.35" DIA.) **177-283** (.425" DIA.)
.5" - 1" / 12.7 - 25.4mm	**568-929**	**568-015**	**216556**	**04AZA721** **04AZA722**	**177-182** (.65" DIA.) **177-287** (.8" DIA.)
			216557	**04AZA730**	
1" - 2" / 25.4 - 50.8mm	**568-930**	**568-015**	**216557**	**04AZA731** **04AZA739** **04AZA740**	**177-289** (1.2" DIA.) **177-291** (1.6" DIA.)
2" - 4" / 50.8 - 101.6mm	**568-936**	**568-015**	**216558**	**04AZA754** **04AZA755** **04AZA756** **04AZA757**	**177-315** (2.5" DIA.) **177-319** (3.5" DIA.)

Mitutoyo

Holtest/Digimatic Holtest/Borematic

SERIES 368, 468, 568 Replacement Head Assembly List

TiN-coated measuring contact head assembly

Head Assy Order No.	Measuring Range	HT(Type I)		HTD		SBM		
		Order No.	Model	Order No.	Model	Order No.	Model	Adaptor*
04AZB136	6 - 8mm	368-161	HT-8R	468-161	HTD-8R	568-361	SBM-8C	
04AZB137	8 - 10mm	368-162	HT-10R	468-162	HTD-10R	568-362	SBM-10C	954595
04AZB138	10 - 12mm	368-163	HT-12R	468-163	HTD-12R	568-363	SBM-12C	
04AZA719	12 - 16mm	368-164	HT-16R	468-164	HTD-16R	568-364	SBM-16C	216556
04AZA720	16 - 20mm	368-165	HT-20R	468-165	HTD-20R	568-365	SBM-20C	
04AZA728	20 - 25mm	368-166	HT-25R	468-166	HTD-25R	568-366	SBM-25C	
04AZA729	25 - 30mm	368-167	HT-30R	468-167	HTD-30R	568-367	SBM-30C	216557
04AZA737	30 - 40mm	368-168	HT-40R	468-168	HTD-40R	568-368	SBM-40C	
04AZA738	40 - 50mm	368-169	HT-50R	468-169	HTD-50R	568-369	SBM-50C	
04AZA750	50 - 63mm	368-170	HT-63R	468-170	HTD-63R	568-370	SBM-63C	
04AZA751	62 - 75mm	368-171	HT-75R	468-171	HTD-75R	568-371	SBM-75C	216558
04AZA752	75 - 88mm	368-172	HT-88R	468-172	HTD-88R	568-372	SBM-88C	
04AZA753	87 - 100mm	368-173	HT-100R	468-173	HTD-100R	568-373	SBM-100C	
04AZA775	100 - 125mm	368-174	HT-125R	468-174	HTD-125R	—	—	—
04AZA776	125 - 150mm	368-175	HT-150R	468-175	HTD-150R	—	—	—
04AZA777	150 - 175mm	368-176	HT-175R	468-176	HTD-175R	—	—	—
04AZA778	175 - 200mm	368-177	HT-200R	468-177	HTD-200R	—	—	—
04AZA779	200 - 225mm	368-178	HT-225R	468-178	HTD-225R	—	—	—
04AZA780	225 - 250mm	368-179	HT-250R	468-179	HTD-250R	—	—	—
04AZA781	250 - 275mm	368-180	HT-275R	468-180	HTD-275R	—	—	—
04AZA782	275 - 300mm	368-181	HT-300R	468-181	HTD-300R	—	—	—
04AZB139	.275 - .35″	368-261	HT-.35″R	468-261	HTD-.35″R	568-461	SBM-.35″C	
04AZB140	.35 - .425″	368-262	HT-.425″R	468-262	HTD-.425″R	568-462	SBM-.425″C	954595
04AZB141	.425 - .5″	368-263	HT-5″R	468-263	HTD-5″R	568-463	SBM-5″C	
04AZA721	.5 - .65″	368-264	HT-.65″R	468-264	HTD-.65″R	568-464	SBM-.65″C	216556
04AZA722	.65 - .8″	368-265	HT-.8″R	468-265	HTD-.8″R	568-465	SBM-.8″C	
04AZA730	.8 - 1″	368-266	HT-1″R	468-266	HTD-1″R	568-466	SBM-1″C	
04AZA731	1 - 1.2″	368-267	HT-1.2″R	468-267	HTD-1.2″R	568-467	SBM-1.2″C	216557
04AZA739	1.2 - 1.6″	368-268	HT-1.6″R	468-268	HTD-1.6″R	568-468	SBM-1.6″C	
04AZA740	1.6 - 2″	368-269	HT-2″R	468-269	HTD-2″R	568-469	SBM-2″C	
04AZA754	2 - 2.5″	368-270	HT-2.5″R	468-270	HTD-2.5″R	568-470	SBM-2.5″C	
04AZA755	2.5 - 3″	368-271	HT-3″R	468-271	HTD-3″R	568-471	SBM-3″C	216558
04AZA756	3 - 3.5″	368-272	HT-3.5″R	468-272	HTD-3.5″R	568-472	SBM-3.5″C	
04AZA757	3.5 - 4″	368-273	HT-4″R	468-273	HTD-4″R	568-473	SBM-4″C	
04AZA783	4 - 5″	368-274	HT-5″R	468-274	HTD-5″R	—	—	—
04AZA784	5 - 6″	368-275	HT-6″R	468-275	HTD-6″R	—	—	—
04AZA785	6 - 7″	368-276	HT-7″R	468-276	HTD-7″R	—	—	—
04AZA786	7 - 8″	368-277	HT-8″R	468-277	HTD-8″R	—	—	—
04AZA787	8 - 9″	368-278	HT-9″R	468-278	HTD-9″R	—	—	—
04AZA788	9 - 10″	368-279	HT-10″R	468-279	HTD-10″R	—	—	—
04AZA789	10 - 11″	368-280	HT-11″R	468-280	HTD-11″R	—	—	—
04AZA790	11 - 12″	368-281	HT-12″R	468-281	HTD-12″R	—	—	—
04AZA941	100 - 113mm	—	—	—	—	568-374	SBM-113C	
04AZA942	112 - 125mm	—	—	—	—	568-375	SBM-125C	216558
04AZA943	4 - 4.5″	—	—	—	—	568-474	SBM-4.5″C	
04AZA944	4.5 - 5″	—	—	—	—	568-475	SBM-5″C	

* Adaptors are required to connect borematic head assemblies and borematic main body units. Sets and complete units include the correct adapters for the included heads, while individual heads (purchased separately) do not.

Adaptors are not required for Vernier/Digimatic Holtests.

Separately purchased head assemblies are not covered by the guaranteed accuracy for holtests (368/468 series).

Tubular Inside Micrometers

SERIES 133 — Single-Rod Type

Technical Data

Accuracy: Refer to the list of specifications.
Graduation: 0.01mm or .001"

Optional Accessories

– – – – : Setting ring (See page C-29.)



FEATURES

- With locking clamp.
- Zero point can be readjusted by rotating the micrometer head sleeve. A key wrench is supplied.
- Clear, crisp graduations on the satin-chrome finished micrometer head.
- Carbide-tipped measuring faces.
- Supplied in fitted plastic case. Over 200mm / 8" supplied in wooden case.

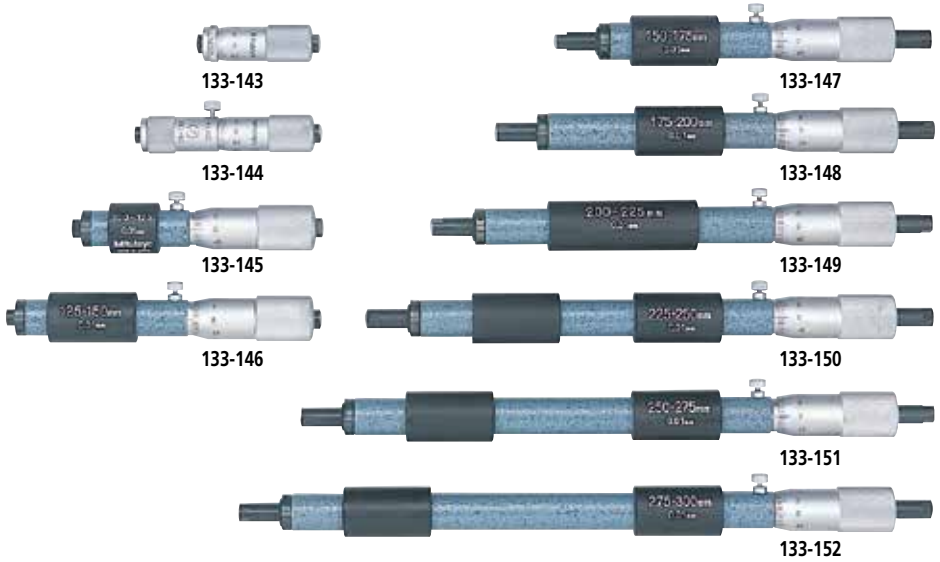

SPECIFICATIONS

Metric Individual

Range	Order No.	Accuracy
50 - 75mm	**133-143**	±3µm
75 - 100mm	**133-144**	±4µm
100 - 125mm	**133-145**	±5µm
125 - 150mm	**133-146**	±5µm
150 - 175mm	**133-147**	±5µm
175 - 200mm	**133-148**	±5µm
200 - 225mm	**133-149**	±5µm
225 - 250mm	**133-150**	±6µm
250 - 275mm	**133-151**	±6µm
275 - 300mm	**133-152**	±6µm
300 - 325mm	**133-153**	±7µm
325 - 350mm	**133-154**	±7µm
350 - 375mm	**133-155**	±7µm
375 - 400mm	**133-156**	±8µm
400 - 425mm	**133-157**	±8µm
425 - 450mm	**133-158**	±8µm
450 - 475mm	**133-159**	±9µm
475 - 500mm	**133-160**	±9µm
500 - 525mm	**133-161**	±9µm
525 - 550mm	**133-162**	±10µm
550 - 575mm	**133-163**	±10µm
575 - 600mm	**133-164**	±10µm
600 - 625mm	**133-165**	±11µm
625 - 650mm	**133-166**	±11µm
650 - 675mm	**133-167**	±11µm
675 - 700mm	**133-168**	±12µm

Metric Individual

Range	Order No.	Accuracy
700 - 725mm	**133-169**	±12µm
725 - 750mm	**133-170**	±12µm
750 - 775mm	**133-171**	±13µm
775 - 800mm	**133-172**	±13µm
800 - 825mm	**133-173**	±13µm
825 - 850mm	**133-174**	±14µm
850 - 875mm	**133-175**	±14µm
875 - 900mm	**133-176**	±14µm
900 - 925mm	**133-177**	±15µm
925 - 950mm	**133-178**	±15µm
950 - 975mm	**133-179**	±15µm
975 - 1000mm	**133-180**	±16µm

Inch Individual

Range	Order No.	Accuracy
2" - 3"	**133-223**	±.00015"
3" - 4"	**133-224**	±.0002"
4" - 5"	**133-225**	±.00025"
5" - 6"	**133-226**	±.00025"
6" - 7	**133-227**	±.00025"
7" - 8"	**133-228**	±.00025"
8" - 9"	**133-229**	±.00025"
9" - 10"	**133-230**	±.0003"
10" - 11"	**133-231**	±.0003"
11" - 12"	**133-232**	±.0003"

Mitutoyo

Tubular Inside Micrometers

SERIES 133

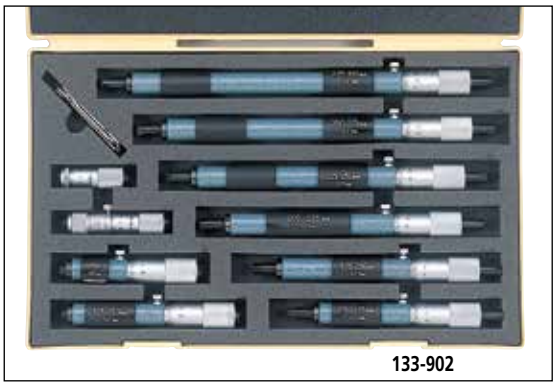

133-902

Metric Micrometer set

Range	Order No.	Included in set
50 - 150mm (4 pcs. set)	**133-901**	• **133-143, 133-144, 133-145, 133-146** • with fitted case
50 - 300mm (10 pcs. set)	**133-902**	• **133-143, 133-144, 133-145, 133-146, 133-147, 133-148, 133-149, 133-150, 133-151, 133-152** • with fitted case

Inch Micrometer set

Range	Order No.	Included in set
2" - 6" (4 pcs. set)	**133-903**	• **133-223, 133-224, 133-225, 133-226** • with fitted case
2" - 12" (10 pcs. set)	**133-904**	• **133-223, 133-224, 133-225, 133-226, 133-227, 133-228, 133-229, 133-230, 133-231, 133-232** • with fitted case

DIMENSIONS

Unit: mm

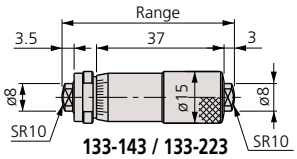

133-143 / 133-223

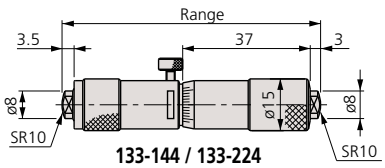

133-144 / 133-224

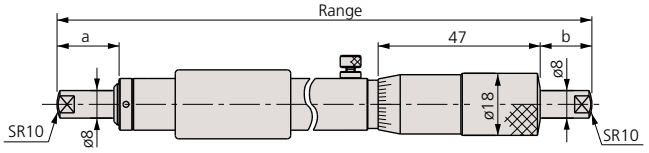

Order No.	L	a	b
133-145 / 133-225	100	5	3
133-146 / 133-226	125	5	3
133-147 / 133-227	150	18	15
133-148 / 133-228	175	18	15
133-149 / 133-229	200	18	15
⋮	⋮	⋮	⋮
133-180 / 133-232	975	18	15

Inside Micrometers

SERIES 141 — Interchangeable-Rod Type

Technical Data

Metric Model

Accuracy: ±(6+L/50)µm
L=Maximum measuring length (mm)
Fraction rounded up

Inch Model

Accuracy: ±{.00024+ (.00004xR/2)}"
R=Maximum measuring length (inch)
Fraction rounded up

Graduation: 0.01mm or .001"

Optional Accessories

– – – – : Setting ring (See page C-29.)



141-233



FEATURES

- Wide range of ID measurements with interchangeable rods.
- Each interchangeable rod is marked with its measuring range.
- The sizes of interchangeable rods can be adjusted with spacing collars.
- Both micrometer head and furnished rods are satin-chrome finished throughout.
- Supplied in fitted plastic case. Over 1000mm / 40" supplied in wooden case.



141-101



When using the extension rod

DIMENSIONS

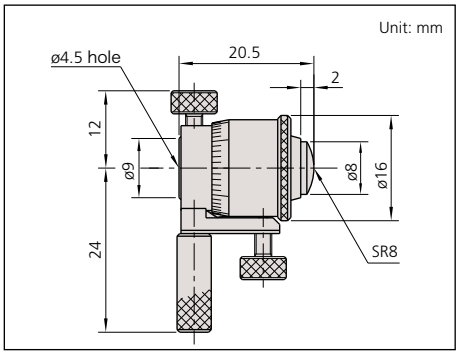

SPECIFICATIONS

Metric

Range	Order No.	Travel of micrometer head	Remarks
25 - 32mm	**141-001 / 141-003***	7mm	Micrometer Head only
25 - 50mm	**141-101 / 141-103***	7mm	with 2 rods
50 - 63mm	**141-025 / 141-027***	13mm	Micrometer Head only
50 - 200mm	**141-205 / 141-211***	13mm	with 3 rods
50 - 300mm	**141-206 / 141-212***	13mm	with 5 rods
200 - 225mm	**141-009 / 141-011***	25mm	Micrometer Head only
200 - 500mm	**141-117**	25mm	with 3 rods
200 - 1000mm	**141-118**	25mm	with 8 rods

*with carbide-tipped face

Inch

Range	Order No.	Travel of micrometer head	Remarks
1" - 1.25"	**141-002 / 141-004***	.25"	Micrometer Head only
1" - 2"	**141-102 / 141-104***	.25"	with 2 rods
2" - 2.5"	**141-026 / 141-028***	.5"	Micrometer Head only
2" - 8"	**141-208 / 141-214***	.5"	with 3 rods
2" - 12"	**141-233 / 141-215***	.5"	with 5 rods
8" - 9"	**141-010 / 141-012***	1"	Micrometer Head only
8" - 20"	**141-121**	1"	with 3 rods
8" - 40"	**141-122**	1"	with 8 rods

*with carbide-tipped face

Mitutoyo

Digimatic Tubular Inside Micrometers

SERIES 337 — Extension-Rod Type / SERIES 339 — Extension-Pipe Type

FEATURES

- Wide range of ID measurements by combining extension rods (pipes) and anvils with the micrometer head.
- The 339 Series uses highly durable extension pipes.
- Carbide-tipped measuring faces.
- Supplied in wooden case.



337-303



339-304

Metric Extension-rod type

Range	Order No.	Travel of micrometer head	Extension rods
200 - 225mm	**337-101**	25mm	Micrometer Head only
200 - 1000mm	**337-301**	25mm	25mm, 50mm, 100mm (2 pcs.), 200mm , 300mm
200 - 1500mm	**337-302**	25mm	25mm, 50mm, 100mm, 200mm, 300mm (3 pcs.)

Inch/Metric Extension-rod type

Range	Order No.	Travel of micrometer head	Extension rods
8 - 9" / 203.2 - 228.6mm	**337-102**	1"	Micrometer Head only
8 - 40" / 203.2 - 1016mm	**337-303**	1"	1", 2", 4" (2 pcs.), 8", 12"
8 - 60" / 203.2 - 1524mm	**337-304**	1"	1", 2", 4", 8", 12" (3 pcs.)

Metric Extension-pipe type

Range	Order No.	Travel of micrometer head	Extension pipes
200 - 225mm	**339-101**	25mm	Micrometer Head only
200 - 1000mm	**339-301**	25mm	25mm, 50mm, 100mm, 200mm, 400mm
200 - 2000mm	**339-302**	25mm	25mm, 50mm, 100mm, 200mm (2 pcs.), 400mm (3 pcs.)

Inch/Metric Extension-pipe type

Range	Order No.	Travel of micrometer head	Extension pipes
8 - 9" / 203.2 - 228.6mm	**339-102**	1"	Micrometer Head only
8 - 40" / 203.2 - 1016mm	**339-303**	1"	1", 2", 4", 8" , 16"
8 - 80" / 203.2 - 1524mm	**339-304**	1"	1", 2", 4", 8" (2 pcs.), 16" (3 pcs.)

DIMENSIONS

Unit: mm

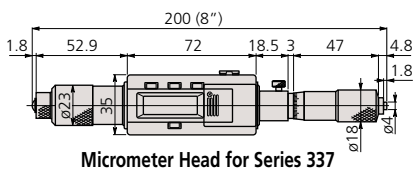

Micrometer Head for Series 337

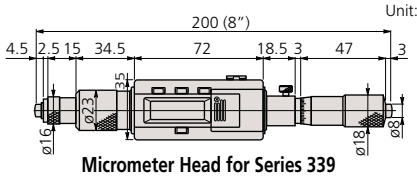

Micrometer Head for Series 339

( ): Inch heads

Technical Data

Metric Model

Accuracy: ±(3+n+L/50)µm
L=Maximum measuring length (mm)
Fraction rounded up
n=Number of rods
Excluding quantizing error

Inch Model

Accuracy: ±{.00015+.00005n+.00005R*/2}"
R=Maximum measuring length (inch)
n=Number of rods
Fraction rounded up

Resolution: 0.001mm or .0001"/0.001mm
Display: LCD
Battery: SR44 (1 pcs.), **938882**
Battery life: Approx. 8 months under normal use

Function

Zero/ABS, Data hold, Data output, Preset, inch/mm conversion (inch/mm models)
Alarm: Low voltage, Counting value composition error

Optional Accessories

05CZA662: SPC cable (1m)
05CZA663: SPC cable (2m)
– – – – : Setting ring (See page C-29.)



Tubular Inside Micrometers

SERIES 137 — Extension-Rod Type

FEATURES

- Wide range of ID measurements by combining extension rods (pipes) and anvils with the micrometer head.
- Carbide-tipped measuring faces are available.
- Supplied in fitted plastic case except 1500 mm / 60″ come in wooden case.



137-011



137-205

Technical Data

Metric Model
Accuracy: ±(3+n+L/50)µm
L=Maximum measuring length (mm)
n=Number of rods
Fraction rounded up

Inch Model
Accuracy: ±{.00015+.00005n+.00005R*/2}"
R=Maximum measuring length (inch)
n=Number of rods
Fraction rounded up

Graduation: 0.01mm or .001"

Optional Accessories

– – – – : Setting ring (See page C-29.)

SPECIFICATIONS

Metric Extension-rod type

Range	Order No.	Travel of micrometer head	Extension rods
50 - 63mm	**137-011 / 137-013***	13mm	Micrometer Head only
50 - 150mm	**137-201 / 137-206***	13mm	13mm, 25mm, 50mm
50 - 300mm	**137-202 / 137-207***	13mm	13mm, 25mm, 50mm (2 pcs.), 100mm
50 - 500mm	**137-203 / 137-208***	13mm	13mm, 25mm, 50mm (2 pcs.), 100mm, 200mm
50 - 1000mm	**137-204 / 137-209***	13mm	13mm, 25mm, 50mm (2 pcs.), 100mm, 200mm (2 pcs.), 300mm
50 - 1500mm	**137-205 / 137-210***	13mm	13mm, 25mm, 50mm (2 pcs.), 100mm, 200mm (3pcs.), 300mm (2 pcs.)

*with carbide-tipped face

Inch Extension-rod type

Range	Order No.	Travel of micrometer head	Extension rods
2" - 2.5"	**137-012 / 137-014***	.5"	Micrometer Head only
2" - 6"	**137-211 / 137-216***	.5"	.5", 1", 2"
2" - 12"	**137-212 / 137-217***	.5"	.5", 1", 2" (2 pcs.), 4"
2" - 20"	**137-213 / 137-218***	.5"	.5", 1", 2" (2 pcs.), 4", 8"
2" - 40"	**137-214 / 137-219***	.5"	.5", 1", 2" (2 pcs.), 4", 8" (2 pcs.), 12"
2" - 60"	**137-215 / 137-220***	.5"	.5", 1", 2" (2 pcs.), 4", 8" (3 pcs.), 12" (2 pcs.)

*with carbide-tipped face

DIMENSIONS

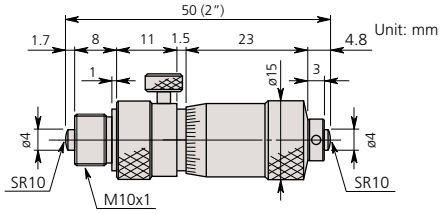

137-011 / 137-012 / 137-013 / 137-014

Mitutoyo

Tubular Inside Micrometers

SERIES 139 — Extension-Pipe Type

FEATURES

- Wide range of ID measurements by combining extension pipes and anvils with the micrometer head.
- Supplied in fitted wooden case, except 500 mm / 20″ which comes in plastic case.



139-177

Metric Extension-pipe type

Range	Order No.	Travel of micrometer head	Extension pipes
100 - 125mm	**139-001**	25mm	Micrometer Head only
100 - 500mm	**139-173**	25mm	25mm, 50mm, 100mm, 200mm
100 - 900mm	**139-174**	25mm	25mm, 50mm, 100mm, 200mm, 400mm
100 - 1300mm	**139-175**	25mm	25mm, 50mm, 100mm, 200mm, 400mm (2 pcs.)
100 - 1700mm	**139-176**	25mm	25mm, 50mm, 100mm, 200mm, 400mm (3 pcs.)
100 - 2100mm	**139-177**	25mm	25mm, 50mm, 100mm, 200mm, 400mm (4 pcs.)

Inch Extension-pipe type

Range	Order No.	Travel of micrometer head	Extension pipes
4" - 5"	**139-002**	1"	Micrometer Head only
4" - 20"	**139-178**	1"	1", 2", 4", 8"
4" - 36"	**139-179**	1"	1", 2", 4", 8", 16"
4" - 52"	**139-180**	1"	1", 2", 4", 8", 16" (2 pcs.)
4" - 68"	**139-181**	1"	1", 2", 4", 8", 16" (3 pcs.)
4" - 84"	**139-182**	1"	1", 2", 4", 8", 16" (4 pcs.)



139-201

Inch Extension-pipe type

Range	Order No.	Travel of micrometer head	Extension pipes	Remarks
1.5 - 2″	**139-004**	.5"	Micrometer Head only	—
4 - 5″	**139-006**	1"	Micrometer Head only	—
1.5 - 12″	**139-201**	.5"	.5″, 1", 2", 2.5″, 3″, 3.5″, 4", 6"	Includes **139-004**
4 - 40″	**139-202**	1"	1", 2", 3", 6", 9", 12", 14", 16", 17", 19″	Includes **139-006**

Technical Data

Metric Model
Accuracy:
- Series 139: ±(3+n+L/50)µm
  L=Maximum measuring length (mm)
  n=number of rods
  Fraction rounded up

Inch Model
Accuracy:
- Series 139: ±{.00015+.00005n+.00005R*/2}"
  R=Maximum measuring length (inch)
  n=number of rods
  Fraction rounded up

Graduation: 0.01mm or .001"
Measurement error of micrometer head: ±3µm

Optional Accessories

– – – – : Setting ring (See page C-29.)

DIMENSIONS

Unit: inch

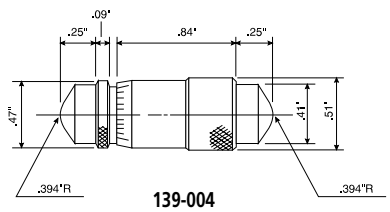

139-004

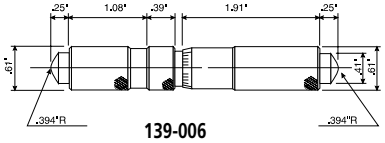

139-006

Unit: mm

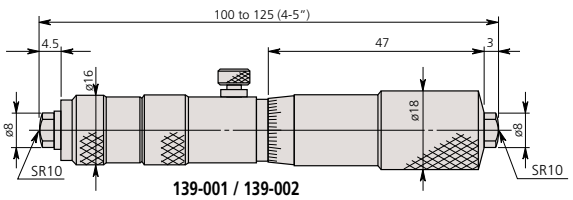

139-001 / 139-002

Tubular Inside Micrometers

SERIES 140 — Extension-Pipe Type

Technical Data

Metric Model
Accuracy: ±(3+n+L/50)µm
n=Number of rod,
L=Maximum measuring length (mm),
Fraction rounded up

Inch Model
Accuracy: ±{.00015+.00005n+.00005R*/2}"
n=Number of rod
R=Maximum measuring length (inch)
Fraction rounded up

Graduation: 0.01mm or .001"

Optional Accessories

– – – – : Setting ring (See page C-29.)

FEATURES

- Wide range of ID measurements by combining extension rods (pipes) and anvils with the micrometer head.
- The Series 140 use highly durable/ large-diameter extension pipes.
- Supplied in fitted wooden case.

Metric Extension-pipe type

Range	Order No.	Travel of micrometer head	Extension pipes
1000 - 2000mm	**140-157**	50mm	50mm, 100mm (2 pcs.), 200mm, 500mm
1000 - 3000mm	**140-158**	50mm	50mm, 100mm (2 pcs.), 200mm, 500mm, 1000mm
1000 - 4000mm	**140-159**	50mm	50mm, 100mm (2 pcs.), 200mm, 500mm, 1000mm (2 pcs.)
1000 - 5000mm	**140-160**	50mm	50mm, 100mm (2 pcs.), 200mm, 500mm, 1000mm (3 pcs.)

Inch Extension-pipe type

Range	Order No.	Travel of micrometer head	Extension pipes
40" - 80"	**140-161**	2"	2", 4" (2 pcs.), 8", 20"
40" - 120"	**140-162**	2"	2", 4" (2 pcs.), 8", 20", 40"
40" - 160"	**140-163**	2"	2", 4" (2 pcs.), 8", 20", 40" (2 pcs.)
40" - 200"	**140-164**	2"	2", 4" (2 pcs.), 8", 20", 40" (3 pcs.)

DIMENSIONS

Unit: mm

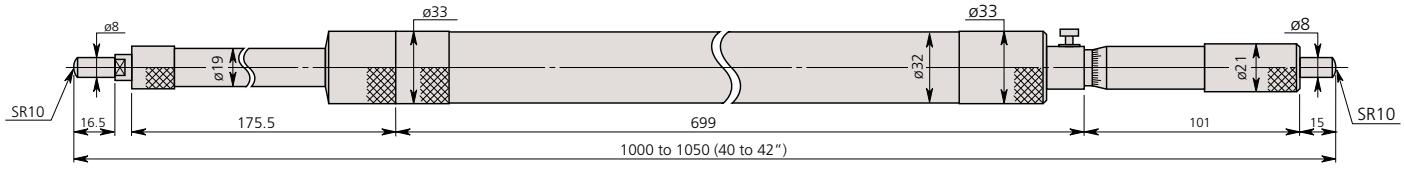

Micrometer Head for Series 140

Mitutoyo

Inside Micrometers

SERIES 345, 145 — Caliper Type

FEATURES

- Caliper-type jaws are made of high-grade, tool steel.
- Locking clamp for positive locking of spindle.
- Non-slip grip finish (digital models)
- Satin-chrome finished.
- A special holder is available to be used with Mitutoyo micrometer stand.
- Supplied in fitted plastic case. Over 175mm / 4" supplied in wooden case.



345-350-30



145-193

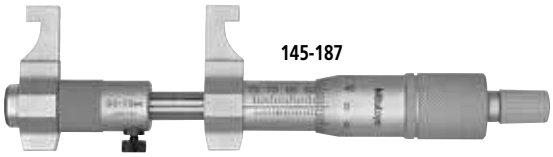

145-187

SPECIFICATIONS

Metric

Range	Order No.	Accuracy
5 - 30mm	**345-250-30**	±5µm
25 - 50mm	**345-251-30**	±6µm

Inch/Metric Digital model

Range	Order No.	Accuracy
.2 - 1.2" / 5-30mm	**345-350-30**	±.00025"
1 - 2" / 25-50mm	**345-351-30**	±.0003"

Metric

Range	Order No.	Accuracy
5 - 30mm	**145-185**	±5µm
25 - 50mm	**145-186**	±6µm
50 - 75mm	**145-187**	±7µm
75 - 100mm	**145-188**	±8µm
100 - 125mm	**145-189**	±9µm
125 - 150mm	**145-190**	±9µm
150 - 175mm	**145-191**	±10µm
175 - 200mm	**145-192**	±10µm
200 - 225mm	**145-217**	±11µm
225 - 250mm	**145-218**	±11µm
250 - 275mm	**145-219**	±12µm
275 - 300mm	**145-220**	±12µm

Inch

Range	Order No.	Accuracy
.2 - 1.2"	**145-193**	±.00025"
1 - 2"	**145-194**	±.0003"
2 - 3"	**145-195**	±.00035"
3 - 4"	**145-196**	±.0004"

DIMENSIONS

Unit: mm

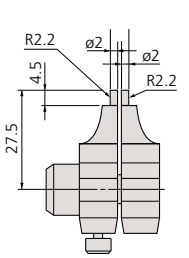

145-185 / 145-193

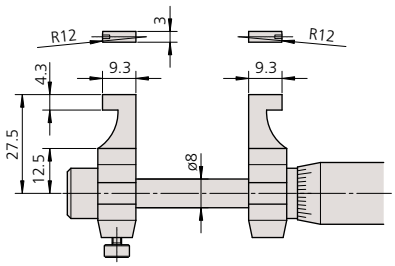

145-186 / 145-194

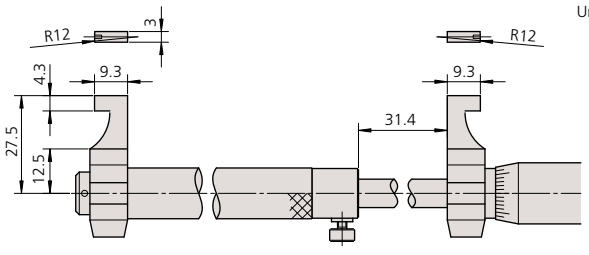

Over 50mm / 2" Models.

Technical Data

Accuracy: Refer to the list of specifications. (excluding quantizing error for digital models)
Resolution*: 0.01mm or .00005"/0.001mm
Graduation**: 0.01mm or .001"
Measuring faces: Carbide tipped
Display*: LCD
Battery*: SR44 (1 pc.), **938882**
Battery life*: Approx. 2.4 years under normal use
*Digital models **Analog models

Function of Digital Model

Origin-set, Zero-setting, Data hold, Data output, inch/mm conversion (inch/mm models)
Function Lock, 2 Presets
Alarm: Low voltage, Counting value composition error

Optional Accessories

05CZA662: SPC cable with data switch 1m / 40"
05CZA663: SPC cable with data switch 2m / 80"
– – – –: Setting ring (See page C-29.)
300401: Cap for stand holder
300400: Stand holder



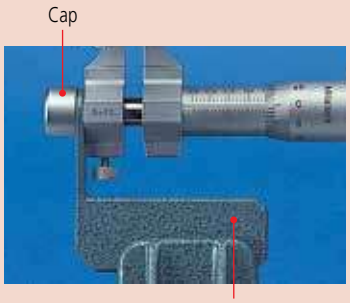

Inside Micro Checker

SERIES 515

FEATURES

- The Inside Micro Checker is designed to efficiently check the zero point of a tubular inside micrometer.
- Each measuring block is made of zirconia-based ceramic and is free from deterioration and dimensional changes over time.



515-585



Standard accessory

Technical Data

Block pitch accuracy: ±(1+L/150)µm
L= Length to check (mm)

Standard Accessories

611671-02: Auxiliary Block (10mm)
940286: Clamping element with V-rest
602195: Spacer (for ø8mm measuring anvil)

Optional Accessories

602160: Wooden case for 300mm Inside Micro Checker
602163: Wooden case for 600mm Inside Micro Checker



SPECIFICATIONS

Range	Order No.	Length to check
300mm	**515-585**	25, 50, 75, 100, 125, 150, 175, 200, 225, 250, 275, 300mm
600mm	**515-586**	25, 50, 75, 100, 125, 150, 175, 200, 225, 250, 275, 300, 325, 350, 375, 400, 425, 450, 475, 500, 525, 550, 575, 600mm

DIMENSIONS

Unit: mm

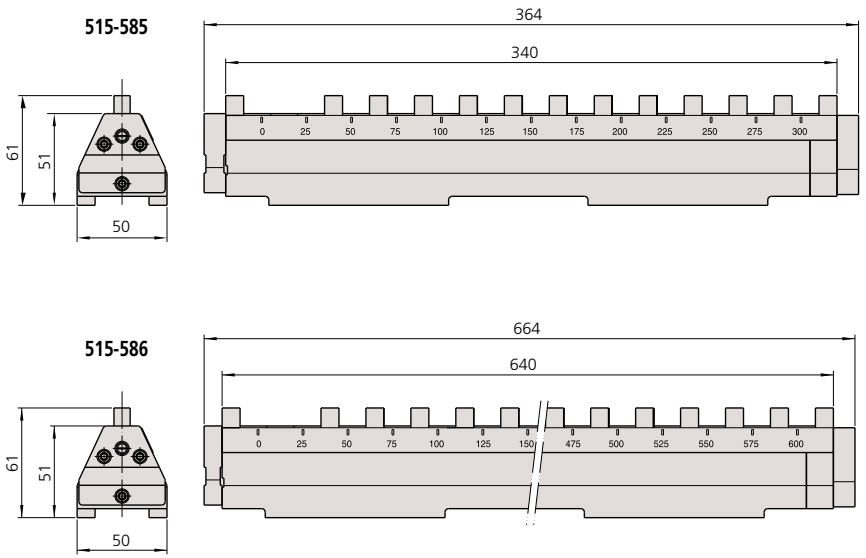

Bore Gages

SERIES 511 — for Small Holes

FEATURES

- Interchangeable anvils are made of alloy steel.
- The dial indicator is fully protected by a rugged cover.

SPECIFICATIONS

Metric Gage Stem ø 8mm

Measuring Range	Order No. Without Dial Gage	Order No. With 2046SB Graduation 0.01mm	Order No. With 2109SB-10 Graduation 0.001mm	Number of Anvils	Number of Spacers
6 - 10mm	**511-209***	**511-211**	**511-210**	9	1
10 - 18.5mm	**511-201***	**511-204**	**511-203**	9	1

*Does not come with Dial Gage Protector Cover (21DZA000)

Inch Gage Stem Dia .375″

Measuring Range	Order No. Without Dial Gage	Order No. With 2922SB Graduation .0005″	Order No. With 2923SB-10 Graduation .0001"	Number of Anvils	Number of Spacers
.24 - .4″	**511-214***	**511-213**	**511-212**	9	1
.4 - .74″	**511-205***	**511-207**	**511-206**	9	1

*Does not come with Dial Gage Protector Cover (21DZA000)

DIMENSIONS

Unit: mm

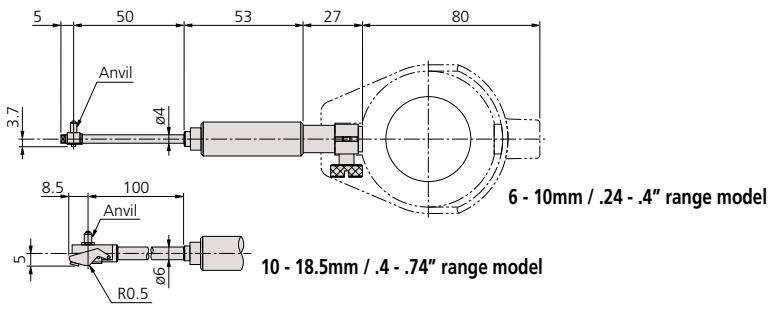



511-204

Technical Data

Accuracy: 5µm / .0002″
Indication stability: 2µm / .00008″
Graduation: 0.01mm, 0.001mm, .0005″ or .0001"

Measuring Heads

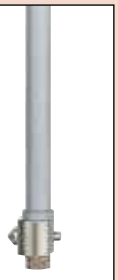

6 - 10mm
.24 - .4″



10 - 18.5mm
.4 - .74″

Optional Accessories

21DZA000: Dial Gage Protector Cover
– – – – : Setting ring (See page C-29.)

Bore Gages

SERIES 511—Standard Type



511-743

Mitutoyo offers a complete selection of bore gages, all of them with interchangeable anvils and necessary accessories to perform close tolerance ID measurements.

FEATURES

- Carbide-tipped contact points for durability.
- The dial indicator is fully protected by a rugged cover.
- Optional extension rods can be attached for measuring deep holes.

SPECIFICATIONS

Inch Gage Stem ø 3/8"

Measuring Range	Order No. Without Indicator	Order No. With 2922SB Graduation .0005"	Order No. With 2923SB-10 Graduation .0001"	Number of Anvils	Number of Spacers
.7 - 1.4"	**511-731***	**511-741**	**511-751**	9	2
1.4 -2.5"	**511-732***	**511-742**	**511-752**	6	4
2.0 - 6.0"	**511-733***	**511-743**	**511-753**	11 (2" sub anvil)	4
4.0 - 6.5"	**511-734***	**511-744**	**511-754**	13	4
6.5 - 10"	**511-735***	**511-745**	**511-755**	6	7
10 16"	**511-736***	**511-746**	**511-756**	5 (3" sub anvil)	7
.7 - 6"	—	**511-931**	**511-932**	26 (2" sub anvil)	10

*Does not come with Dial Gage Protector Cover (21DZA000)

Metric Gage Stem ø 8mm

Measuring Range	Order No. Without Indicator	Order No. With 2046SB Graduation 0.01mm	Order No. With 2109SB-10 Graduation 0.001mm	Number of Anvils	Number of Spacers
18 - 35mm	**511-701***	**511-711**	**511-721**	9	2
35 - 60mm	**511-702***	**511-712**	**511-722**	6	4
50 - 150mm	**511-703***	**511-713**	**511-723**	11 (50mm Sub Anvil)	4
100 - 160mm	**511-704***	**511-714**	**511-724**	13	4
160 - 250mm	**511-705***	**511-715**	**511-725**	6	7
250 - 400mm	**511-706***	**511-716**	**511-726**	5 (75mm Sub Anvil)	7
18 - 150mm	—	**511-921 (3 pc set)**	**511-922 (3 pc set)**	26 (50mm Sub Anvil)	10

*Does not come with Dial Gage Protector Cover (21DZA000)

Technical Data

Accuracy: 2µm / .00008"
Indication stability: 1µm / .00004"
Graduation: 0.01mm, 0.001mm, .0005" or .0001"



511-712

Mitutoyo

Contact Point

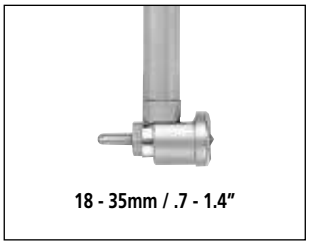

18 - 35mm / .7 - 1.4"

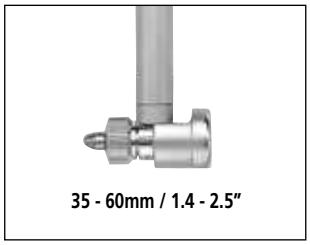

35 - 60mm / 1.4 - 2.5"



50 - 100mm / 2 - 4"



100 - 160mm / 4 - 6"



160 - 250mm / 6 - 10"

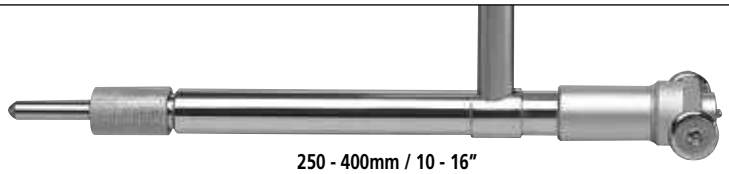

250 - 400mm / 10 - 16"

DIMENSIONS

Unit: mm

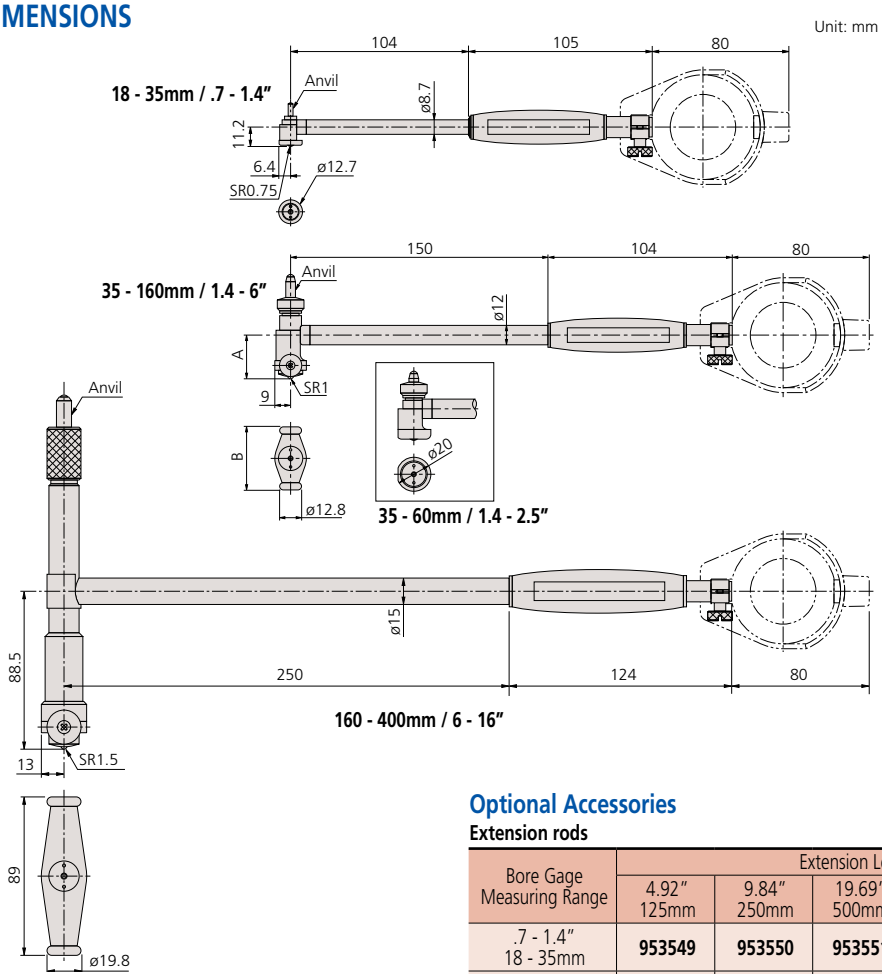

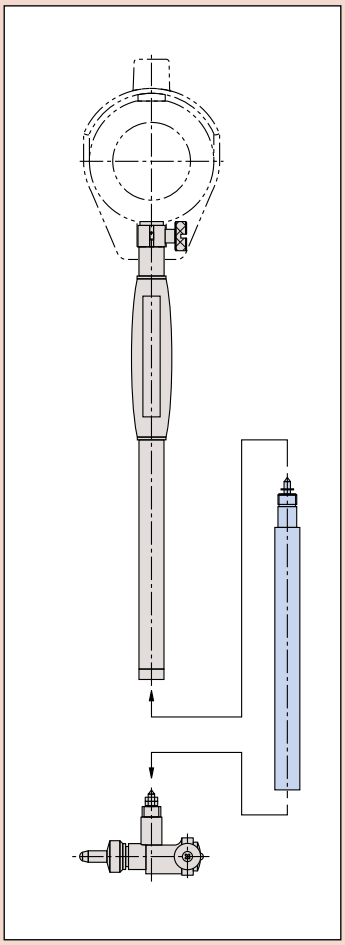

Setting ring (See page C-29.)

Optional Accessories

Extension rods

Bore Gage Measuring Range	Extension Length					Rod Diameter	Spanner
	4.92" 125mm	9.84" 250mm	19.69" 500mm	29.53" 750mm	39.37" 1000mm		
.7 - 1.4" 18 - 35mm	**953549**	**953550**	**953551**	-	-	.34" 8.7mm	102148
1.4 - 6.5" 35 - 160mm	**953552**	**953553**	**953554**	**953555**	**953556**	.47" 12mm	212556
6.5 - 16" 160 - 400mm	**953557**	**952361**	**953558**	**953559**	**953560**	.59" 15mm	212556

Note: Above list is used for 511-1XX series; not available for 511-2XX Series.

Bore Gages

SERIES 511 — Short-Leg Type



511-786

Technical Data

Accuracy: 2µm / .00008″
Indication stability: 1µm / .00004″
Graduation: 0.01mm, 0.001mm, .0005″ or .0001″

Contact Point

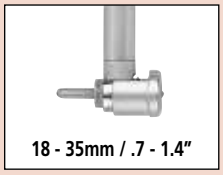

18 - 35mm / .7 - 1.4″

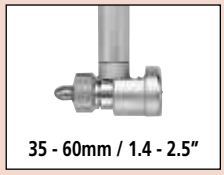

35 - 60mm / 1.4 - 2.5″

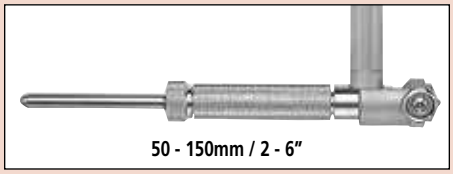

50 - 150mm / 2 - 6″

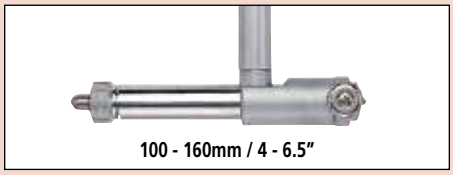

100 - 160mm / 4 - 6.5″

Optional Accessories

– – – – : Setting ring (See page C-29.)

FEATURES

- Compact and lightweight because of the short length below the grip.
- Carbide-tipped contact point for durability.

SPECIFICATIONS

Inch Gage Stem ø 3/8″

Measuring Range	Order No. With 2922SB Graduation .0005"	Order No. With 2923SB-10 Graduation .0001"	Number of Anvils	Number of Spacers
.7 - 1.4"	**511-786**	**511-791**	9	2
1.4 - 2.5"	**511-787**	**511-792**	6	4
2.0 - 6.0"	**511-788**	**511-793**	11 (2" sub anvil)	4
4.0 - 6.5"	**511-789**	**511-794**	13	4

Metric Gage Stem ø 8mm

Measuring Range	Order No. With 2046SB Graduation 0.01mm	Order No. With 2109SB-10 Graduation 0.001mm	Number of Anvils	Number of Spacers
18 - 35mm	**511-766**	**511-771**	9	2
35 - 60mm	**511-767**	**511-772**	6	4
50 - 150mm	**511-768**	**511-773**	11 (50mm Sub Anvil)	4
100 - 160mm	**511-769**	**511-774**	13	4

DIMENSIONS

Unit: mm

18 - 35mm / .7 - 1.4″

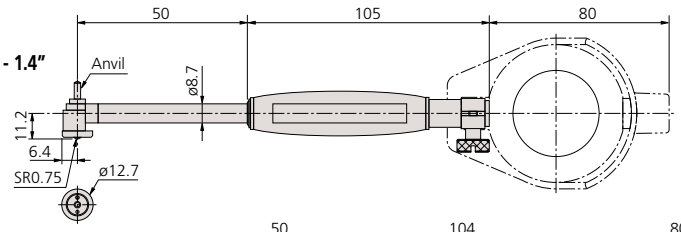

35 - 60mm / 1.4 - 2.5″
50 - 150mm / 2 - 6″
100 - 160mm / 4 - 6.5″

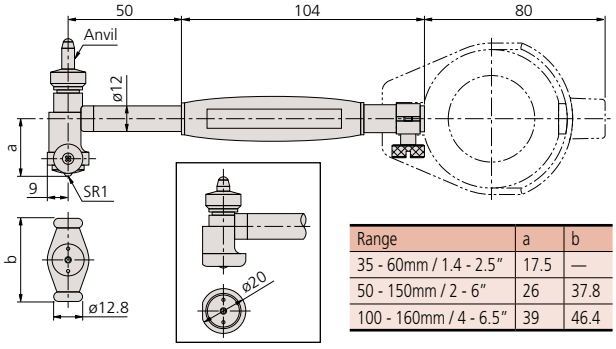

Range	a	b
35 - 60mm / 1.4 - 2.5″	17.5	—
50 - 150mm / 2 - 6″	26	37.8
100 - 160mm / 4 - 6.5″	39	46.4

Mitutoyo

Bore Gages

SERIES 511 — for Blind Holes

FEATURES

- Measure ID at position close to the bottom of blind holes.
- Carbide-contact point ensures high durability and wear resistance.
- Grip is large and hollow to reduce effect of body heat on high-accuracy measurements.

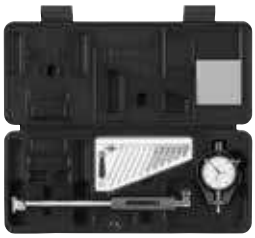

511-426



511-426

SPECIFICATIONS

Metric Gage Stem ø 8mm

Measuring Range	**Order No. Without Dial Gage**	**Order No.** With 2046SB Graduation 0.01mm	**Order No.** With 2109SB-10 Graduation 0.001mm	Number of Anvils	Number of Spacers
15 - 35mm	**511-415***	**511-425**	**511-435**	11 10mm Sub-Anvil	1
35 - 60mm	**511-416***	**511-426**	**511-436**	6	4
50 - 150mm	**511-417***	**511-427**	**511-437**	11 50mm Sub-Anvil	4

*Does not come with Dial Gage Protector Cover (21DZA000)

Inch Gage Stem Dia. .375″

Measuring Range	**Order No. Without Dial Gage**	**Order No.** With 2922SB Graduation .0005"	**Order No.** With 2923SB-10 Graduation .0001"	Number of Anvils	Number of Spacers
.6 - 1.4"	**511-418***	**511-428**	**511-438**	11 .4" Sub-Anvil	1
1.4 - 2.4"	**511-419***	**511-429**	**511-439**	6	4
2 - 6"	**511-420***	**511-430**	**511-440**	11 2" Sub-Anvil	4

*Does not come with Dial Gage Protector Cover (21DZA000)

Technical Data

Accuracy: 4µm/.00016″
Indication stability: 1µm/.0004″
Graduation: 0.01mm, 0.001mm, .0005″ or .0001"

Contact Points

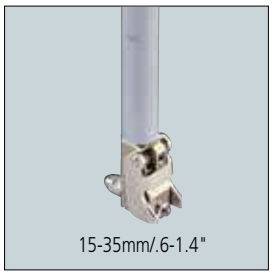

15-35mm/.6-1.4"



35-60mm/1.4-2.4"

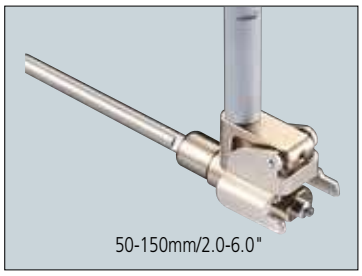

50-150mm/2.0-6.0"

DIMENSIONS

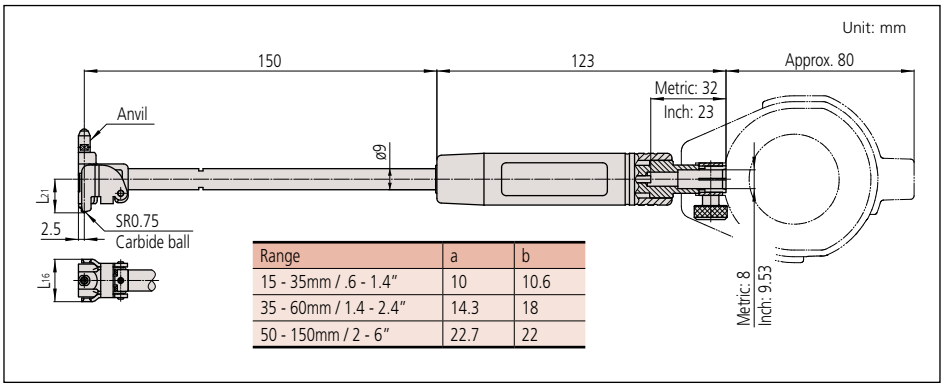

Range	a	b
15 - 35mm / .6 - 1.4″	10	10.6
35 - 60mm / 1.4 - 2.4″	14.3	18
50 - 150mm / 2 - 6″	22.7	22

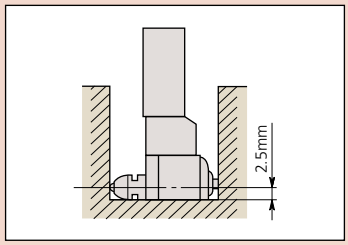

Optional Accessories

– – – – : Setting ring (See page C-29.)



Bore Gages

SERIES 511 — with Micrometer Head

FEATURES

- Interchangeable anvil is attached to a micrometer head for accurate dimensional setting.
- Wide measuring range with sub-anvils.
- Carbide ball contact point for durability.
- Extension rods (optional) can be attached for measuring deep holes.
- Optional setting rings offer the best method of zero-setting bore gages.

SPECIFICATIONS

Inch Gage Stem ø 3/8″

Measuring Range	Order No. Without Indicator	Order No. With 2922SB Graduation .0005"	Order No. With 2923SB-10 Graduation .0001"	Mic Head Travel	Sub Anvil
2.4 - 4.0″	**511-833***	**511-843**	**511-853**	.4"	.4", .8"
4.0 - 6.4″	**511-834***	**511-844**	**511-854**	.5"	.4", .8",.8"
6.0 - 10″	**511-835***	**511-845**	**511-855**	.5"	.4", .8", .8", 2"
10 - 16″	**511-836***	**511-846**	**511-856**	1"	1", 2", 2"
16 - 24″	**511-837***	**511-847**	**511-857**	2"	2", 4"
24 - 32″	**511-838***	**511-848**	**511-858**	2"	2", 4"

*Does not come with Dial Gage Protector Cover (21DZA000)

Metric Gage Stem ø 8mm

Measuring Range	Order No. Without Indicator	Order No. With 2046SB Graduation 0.01mm	Order No. With 2109SB-10 Graduation 0.001mm	Mic Head Travel	Sub Anvil
60 - 100mm	**511-803***	**511-813**	**511-823**	10mm	10mm, 20mm
100 - 160mm	**511-804***	**511-814**	**511-824**	13mm	10mm, 20mm, 20mm
150 - 250mm	**511-805***	**511-815**	**511-825**	13mm	10mm, 20mm, 20mm, 50mm
250 - 400mm	**511-806***	**511-816**	**511-826**	25mm	25mm, 50mm, 50mm
400 - 600mm	**511-807***	**511-817**	**511-827**	50mm	50mm, 100mm
600 - 800mm	**511-808***	**511-818**	**511-828**	50mm	50mm,100mm

*Does not come with Dial Gage Protector Cover (21DZA000)

Technical Data

Accuracy: 2µm / .00008″
Indication stability: 1µm / .00004″
Graduation: 0.01mm, 0.001mm, .0005″ or .0001"

Optional Accessories

Extension rods

Bore Gage Measuring Range	Extension Length					Rod Diameter	Spanner
	4.92″ 125mm	9.84″ 250mm	19.69″ 500mm	29.53″ 750mm	39.37″ 1000mm		
2.4-6.4″ 60 - 160mm	**953552**	**953553**	**953554**	**953555**	**953556**	.47" 12mm	212556
6.0 - 32.0″ 150-800mm	**953557**	**952361**	**953558**	**953559**	**953560**	.59″ 15mm	212556

Note: Not available for 511-2XX Series.

Contact Point



35 - 60mm / 1.4 - 2.5”



60 - 100mm / 2.4 - 4”

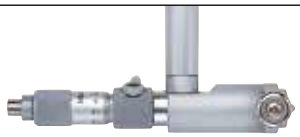

100 - 160mm / 4 - 6”

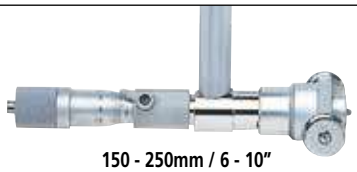

150 - 250mm / 6 - 10”

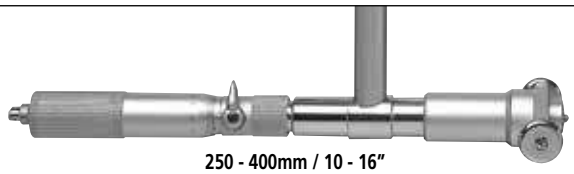

250 - 400mm / 10 - 16”

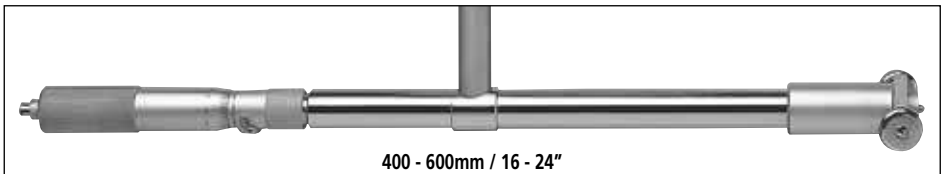

400 - 600mm / 16 - 24”

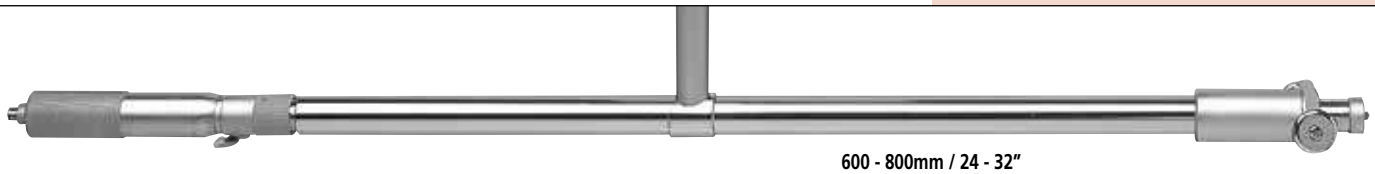

600 - 800mm / 24 - 32”

DIMENSIONS

Unit: mm

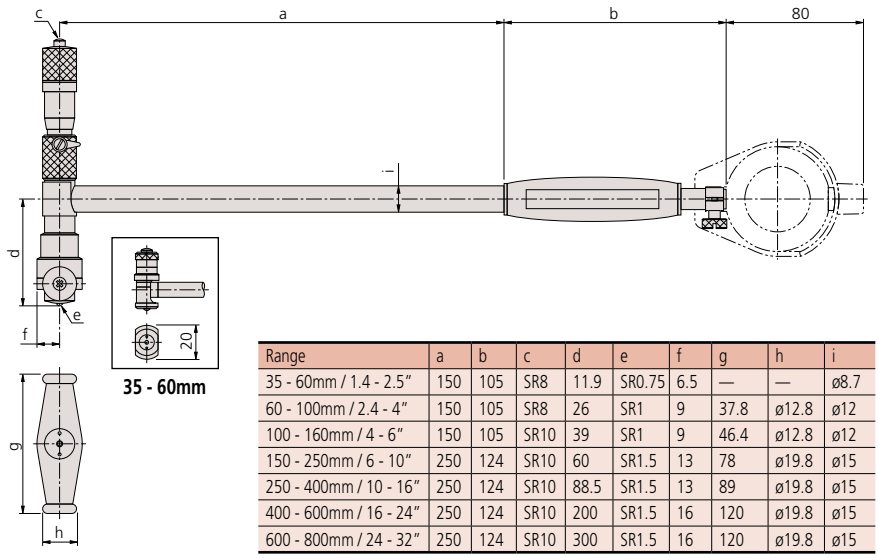

Range	a	b	c	d	e	f	g	h	i
35 - 60mm / 1.4 - 2.5”	150	105	SR8	11.9	SR0.75	6.5	—	—	ø8.7
60 - 100mm / 2.4 - 4”	150	105	SR8	26	SR1	9	37.8	ø12.8	ø12
100 - 160mm / 4 - 6”	150	105	SR10	39	SR1	9	46.4	ø12.8	ø12
150 - 250mm / 6 - 10”	250	124	SR10	60	SR1.5	13	78	ø19.8	ø15
250 - 400mm / 10 - 16”	250	124	SR10	88.5	SR1.5	13	89	ø19.8	ø15
400 - 600mm / 16 - 24”	250	124	SR10	200	SR1.5	16	120	ø19.8	ø15
600 - 800mm / 24 - 32”	250	124	SR10	300	SR1.5	16	120	ø19.8	ø15

ABSOLUTE Digimatic Bore Gage

SERIES 511

This ABSOLUTE Digimatic bore gage is exclusively designed for ID measurement.



511-521

FEATURES

- The minimum value holding function provides the easy detection of hole diameter.



- Up to three sets of master value and upper/lower tolerance value can be memorized.
- An analog bar indicator is integrated to enhance the intuition in reading.
- Go/no-go judgment is performed by setting the upper and lower tolerances.
- Up to four rods (250mm or 500mm) can be used.

SPECIFICATIONS

Inch/Metric

Range	Order No.	Probe depth
1.8 - 4" / 45 - 100mm	**511-521**	6" (152.4mm)
4 - 6.5" / 100 - 160mm	**511-522**	6" (152.4mm)

DIMENSIONS AND MASS

Unit: mm

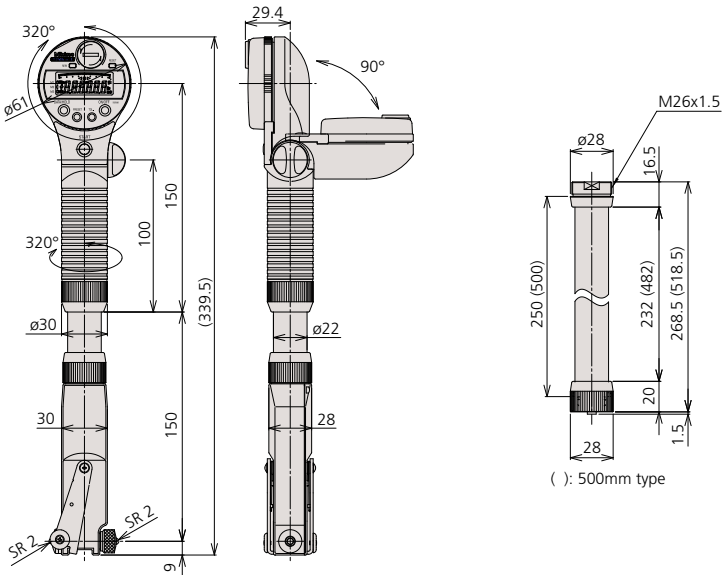

MASS: 500g

Technical Data

Accuracy: Wide Range: 0.003mm / .00012"
Resolution: .00005" / 0.001mm
Display: LCD
Battery: SR44 (1 pc.) (**938882**)
Battery life: Approx. 9 months for normal use
Dust/Water protection level: Conforming to IP53

Functions

Origin-set, Zero-Setting, Presetting, Power on/off, inch/mm conversion (inch/mm type only), Data output, go/no-go tolerance judgment
Alarm: Low battery voltage, scale contamination, over-flow error, tolerance limit setting error

Optional Accessories

21DZA089: Extension rod 250 mm (10")
21DZA081: Extension rod 500 mm (20")
516-118-10: Origin setup metric rectangular gage block set
516-119-10: Origin setup metric square gage block set
516-120-26: GB calibration kit for series 511 bore gage. (9 pcs GB and plain jaw, 160mm holder)
905338: SPC cable (40" / 1m)
905409: SPC cable (80" / 2m)
– – – – : Setting ring (See page C-29.)



Origin setup gage block set



Example:
using four extension rods.

Bore Gages

SERIES 526 — for Extra Small Holes

These bore gages measure diameters of small holes. The radial displacement of split-ball contact is converted to axial displacement of measuring rod, which is shown on the dial indicator.

FEATURES

- Optional stand (**215-120-10**) is available for efficient measurement of multiple small holes.

SPECIFICATIONS

Metric Gage Stem ø 8mm

Measuring Range	**Order No. Without Dial Gage**	**Order No.** With **2046SB** Graduation 0.01mm	**Order No.** With **2019SB-10** Graduation 0.001mm	Number of Anvils	Number of Needles	Probe depth (D)	Setting Rings
0.95 - 1.55mm	**526-170***	**526-173**	**526-172**	5	1	11.5mm	5
1.5 - 4mm	**526-160***	**526-163**	**526-162**	9	2	17.5, 22.5mm	9
3.7 - 7.3mm	**526-150***	**526-153**	**526-152**	7	1	32mm	7
7 - 10mm	**526-101***	**526-126**	**526-124**	6	1	56mm	
10 - 18mm	**526-102***	**526-127**	**526-125**	8	1	62mm	

*Does not come with Dial Gage Protector (21DZA000)

Inch Gage Stem Dia .375″

Measuring Range	**Order No. Without Dial Gage**	**Order No.** With **2922SB** Graduation .0005"	**Order No.** With **2923SB-10** Graduation .0001"	Number of Anvils	Number of Needles	Probe depth (D)	Setting Rings
.037 - .061″	**526-175***	—	**526-176**	5	1	.45″	5
.06 - .157″	**526-165***	—	**526-166**	9	2	.68″, .89″	9
.145 - .29″	**526-155***	—	**526-156**	7	1	1.26″	7
.3 - .4″	**526-103***	**526-119**	**526-122**	6	1	2.2″	
.4 - .7″	**526-104***	**526-120**	**526-123**	8	1	2.4″	

*Does not come with Dial Gage Protector (21DZA000)

DIMENSIONS

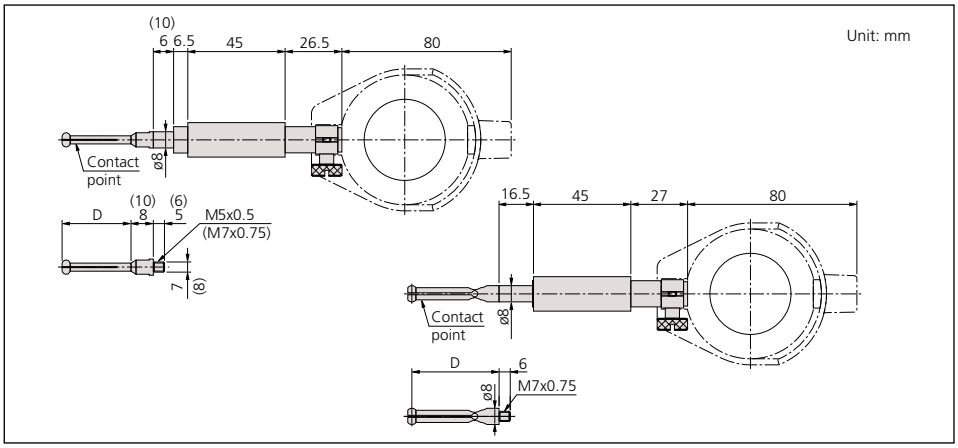

DIAL FACES

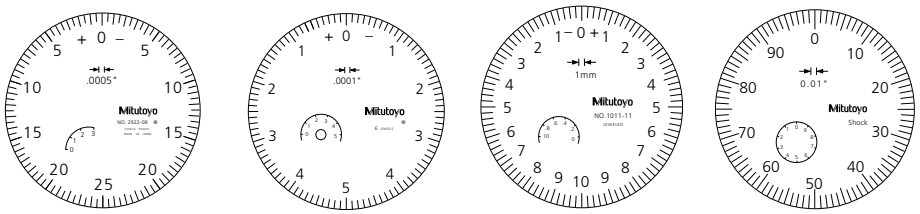

2922SB .0005″ | **2923SB-10** .0001″ | **2109SB-10** 0.001mm | **2046SB** 0.01mm



526-127

526-172

Technical Data

Accuracy: 4µm / .00016″
Indication stability: 2µm / .00008″
Graduation: 0.01mm, 0.001mm, .0005″ or .00001"

Contact Point

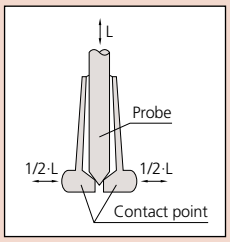

Optional Accessory

215-120-10: Bore gage stand



– – – – : Setting ring (See page C-29.)



515-590

Bore Gage Zero Checker

SERIES 515

The Bore Gage Zero Checker allows easy zero adjustment of dial bore gages with ranges of 18mm (.7") through 400mm (16") using gage blocks.



SPECIFICATIONS

Order No.	Applicable range
515-590	18 -400mm (.7" - 16")

Setting Rings

SERIES 177 — Accessories for Inside Micrometers, Holtest and Dial Bore Gages

FEATURES

- Used for quick and accurate setting of dial bore gages, Holtest and inside micrometers.
- If a setting ring of an optimal size is prepared, it can be used for calibration.

How to read the indicated value

Series 526

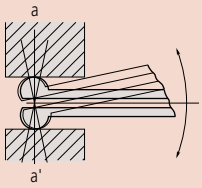

The 526 series has a gage head with high curvature. Alignment with the diameter (a-a') is achieved by rotating the gage head in the direction indicated by the arrow, and the reading is the maximum value read from the dial indicator.

Series 511

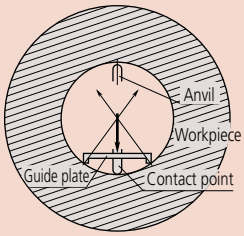

The 511 series provides a guide plate to align the setting ring diameter with the measurement axis of the bore gage.

Steel Setting Rings

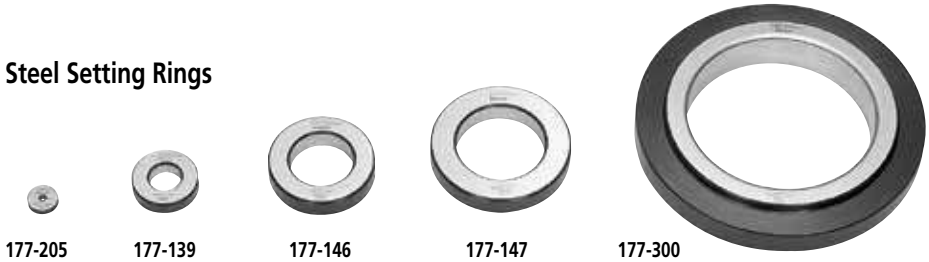

177-205 177-139 177-146 177-147 177-300

Ceramic Setting Rings



177-424 177-429 177-432

DIMENSIONS

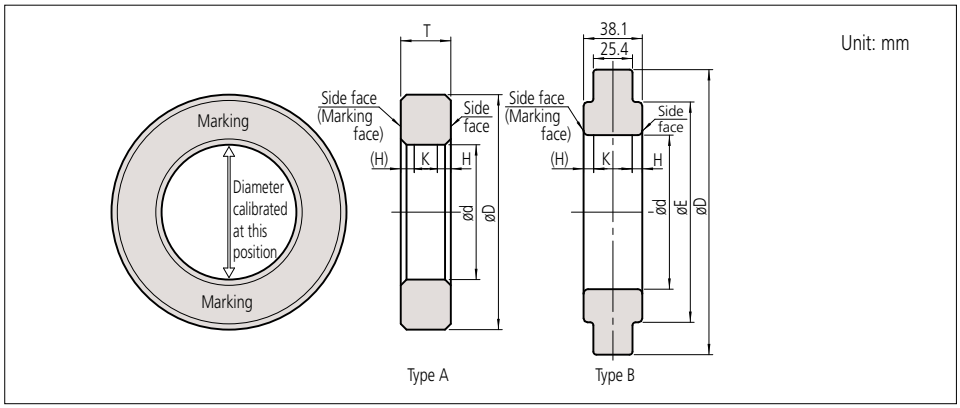

Mitutoyo

SPECIFICATIONS

Steel Setting Rings

Metric

Order No.	Nominal size ød	Dimensions (mm)			Type	Accuracy				
		øD	øE	T		Tolerance between the nominal size and the actual diameter (µm)	Uncertainty of marked diameter value (µm)*1	Roundness/ Cylindricity (µm)*2	Distance from the side face H (mm)	Size of warranted calibration surface K (mm)
177-220	1mm	20	—	4	A	±10	±1.5	1	1.6	0.8
177-222	1.1mm	20	—	4	A	±10	±1.5	1	1.6	0.8
177-225	1.2mm	20	—	4	A	±10	±1.5	1	1.6	0.8
177-227	1.3mm	20	—	4	A	±10	±1.5	1	1.6	0.8
177-230	1.4mm	20	—	4	A	±10	±1.5	1	1.6	0.8
177-236	1.75mm	25	—	5	A	±10	±1.5	1	1.6	1.8
177-239	2mm	25	—	5	A	±10	±1.5	1	1.6	1.8
177-242	2.25mm	25	—	5	A	±10	±1.5	1	1.6	1.8
177-208	2.5mm	25	—	7	A	±10	±1.5	1	1.7	3.6
177-246	2.75mm	25	—	7	A	±10	±1.5	1	1.7	3.6
177-248	3mm	25	—	7	A	±10	±1.5	1	1.7	3.6
177-250	3.25mm	25	—	7	A	±10	±1.5	1	1.7	3.6
177-252	3.5mm	25	—	7	A	±10	±1.5	1	1.7	3.6
177-255	3.75mm	25	—	7	A	±10	±1.5	1	1.7	3.6
177-204	4mm	25	—	7	A	±10	±1.5	1	1.7	3.6
177-257	4.5mm	25	—	7	A	±10	±1.5	1	1.7	3.6
177-205	5mm	25	—	7	A	±10	±1.5	1	1.7	3.6
177-263	5.5mm	25	—	7	A	±10	±1.5	1	1.7	3.6
177-267	6mm	25	—	7	A	±10	±1.5	1	1.7	3.6
177-271	6.5mm	25	—	7	A	±10	±1.5	1	1.7	3.6
177-275	7mm	25	—	7	A	±10	±1.5	1	1.7	3.6
177-125	8mm	32	—	10	A	±10	±1.5	1	2.0	6.0
177-279	9mm	32	—	10	A	±10	±1.5	1	2.0	6.0
177-126	10mm	32	—	10	A	±10	±1.5	1	2.0	6.0
177-284	12mm	32	—	10	A	±10	±1.5	1	2.0	6.0
177-132	14mm	38	—	10	A	±10	±1.5	1	2.0	6.0

Order No.	Nominal size ød	Dimensions (mm)			Type	Accuracy				
		øD	øE	T		Tolerance between the nominal size and the actual diameter (µm)	Uncertainty of marked diameter value (µm)*1	Roundness/ Cylindricity (µm)*2	Distance from the side face H (mm)	Size of warranted calibration surface K (mm)
177-177	16mm	45	—	10	A	±10	±1.5	1	2.0	6.0
177-133	17mm	45	—	10	A	±10	±1.5	1	2.0	6.0
177-285	18mm	45	—	10	A	±10	±1.5	1	2.0	6.0
177-286	20mm	45	—	10	A	±10	±1.5	1	2.0	6.0
177-139	25mm	53	—	15	A	±10	±1.5	1	3.2	8.6
177-288	30mm	71	—	15	A	±10	±1.5	1	3.2	8.6
177-140	35mm	71	—	15	A	±10	±1.5	1	3.2	8.6
177-290	40mm	71	—	15	A	±10	±1.5	1	3.2	8.6
177-178	45mm	85	—	15	A	±10	±1.5	1	3.7	7.6
177-146	50mm	85	—	20	A	±20	±1.5	1	3.7	12.6
177-292	60mm	112	—	20	A	±20	±1.5	1	3.7	12.6
177-314	62mm	112	—	20	A	±20	±1.5	1.5	3.7	12.6
177-147	70mm	112	—	20	A	±20	±1.5	1.5	3.7	12.6
177-316	75mm	125	—	25	A	±20	±1.5	1.5	4.2	16.6
177-294	80mm	125	—	25	A	±20	±1.5	1.5	4.2	16.6
177-318	87mm	140	—	25	A	±20	±1.5	1.5	4.2	16.6
177-148	90mm	140	—	25	A	±20	±1.5	1.5	4.2	16.6
177-296	100mm	160	—	25	A	±20	±1.5	2	4.2	16.6
177-298	125mm	210	168	38.1 (25.4)	B	±20	±2.5	2	5.3	27.5
177-300	150mm	235	187		B	±20	±2.5	2	5.3	27.5
177-302	175mm	260	215		B	±20	±2.5	2.5	5.3	27.5
177-304	200mm	311	244		B	±20	±2.5	2.5	5.3	27.5
177-306	225mm	337	264		B	±20	±2.5	2.5	5.3	27.5
177-308	250mm	362	290		B	±20	±2.5	3	5.3	27.5
177-310	275mm	413	321		B	±20	±2.5	3	5.3	27.5
177-312	300mm	438	340		B	±20	±2.5	3	5.3	27.5

Inch

Order No.	Nominal size ød	Dimensions (mm)			Type	Accuracy				
		øD	øE	T		Tolerance between the nominal size and the actual diameter (inch)	Uncertainty of marked diameter value (inch)*1	Roundness/ Cylindricity (inch)*2	Distance from the side face H (mm)	Size of warranted calibration surface K (mm)
177-209	.1″	25	—	7	A	±.0004″	±.00006″	.00004″	1.5	4.0
177-206	.16″	25	—	7	A	±.0004″	±.00006″	.00004″	1.5	4.0
177-207	.24″	25	—	7	A	±.0004″	±.00006″	.00004″	1.5	4.0
177-281	.275″	25	—	7	A	±.0004″	±.00006″	.00004″	1.8	3.4
177-179	.35″	32	—	10	A	±.0004″	±.00006″	.00004″	1.8	6.4
177-283	.425″	32	—	10	A	±.0004″	±.00006″	.00004″	1.8	6.4
177-180	.5″	32	—	10	A	±.0004″	±.00006″	.00004″	1.8	6.4
177-181	.6″	38	—	10	A	±.0004″	±.00006″	.00004″	1.8	6.4
177-182	.65″	45	—	10	A	±.0004″	±.00006″	.00004″	1.8	6.4
177-183	.7″	45	—	10	A	±.0004″	±.00006″	.00004″	1.8	6.4
177-287	.8″	45	—	10	A	±.0004″	±.00006″	.00004″	1.8	6.4
177-184	1″	53	—	15	A	±.0004″	±.00006″	.00004″	3.0	9.0
177-289	1.2″	71	—	15	A	±.0004″	±.00006″	.00004″	3.0	9.0
177-185	1.4″	71	—	15	A	±.0004″	±.00006″	.00004″	3.0	9.0
177-291	1.6″	71	—	15	A	±.0004″	±.00006″	.00004″	3.0	9.0
177-186	1.8″	85	—	15	A	±.0004″	±.00006″	.00004″	3.5	8.0

Order No.	Nominal size ød	Dimensions (mm)			Type	Accuracy				
		øD	øE	T		Tolerance between the nominal size and the actual diameter (inch)	Uncertainty of marked diameter value (inch)*1	Roundness/ Cylindricity (inch)*2	Distance from the side face H (mm)	Size of warranted calibration surface K (mm)
177-187	2″	85	—	20	A	±.0008″	±.00006″	.00004″	3.5	13.0
177-293	2.4″	112	—	20	A	±.0008″	±.00006″	.00004″	3.5	13.0
177-315	2.5″	112	—	20	A	±.0008″	±.00006″	.00006″	4.0	12.0
177-188	2.8″	112	—	20	A	±.0008″	±.00006″	.00006″	4.0	12.0
177-317	3″	125	—	25	A	±.0008″	±.00006″	.00006″	4.0	17.0
177-295	3.2″	125	—	25	A	±.0008″	±.00006″	.00006″	4.0	17.0
177-319	3.5″	140	—	25	A	±.0008″	±.00006″	.00006″	4.0	17.0
177-189	3.6″	140	—	25	A	±.0008″	±.00006″	.00006″	4.0	17.0
177-297	4″	160	—	25	A	±.0008″	±.00006″	.00008″	4.0	17.0
177-299	5″	210	168	38.1	B	±.0008″	±.00010″	.00008″	5.0	28.1
177-301	6″	235	187	38.1	B	±.0008″	±.00010″	.00008″	5.0	28.1
177-303	7″	260	215	38.1	B	±.0008″	±.00010″	.00010″	5.0	28.1
177-305	8″	311	244	38.1	B	±.0008″	±.00010″	.00010″	5.0	28.1
177-307	9″	337	264	38.1	B	±.0008″	±.00010″	.00010″	5.0	28.1
177-309	10″	362	290	38.1	B	±.0008″	±.00010″	.00012″	5.0	28.1
177-311	11″	413	321	38.1	B	±.0008″	±.00010″	.00012″	5.0	28.1
177-313	12″	438	340	38.1	B	±.0008″	±.00010″	.00012″	5.0	28.1

Cera Setting Rings

Metric

Order No.	Nominal size ød	Dimensions (mm)			Type	Accuracy				
		øD	øE	T		Tolerance between the nominal size and the actual diameter (µm)	Uncertainty of marked diameter value (µm)*1	Roundness/ Cylindricity (µm)*2	Distance from the side face H (mm)	Size of warranted calibration surface K (mm)
177-418	4mm	25	—	7	A	±10	±1.5	1	1.7	3.6
177-420	6mm	25	—	7	A	±10	±1.5	1	1.7	3.6
177-423	8mm	32	—	10	A	±10	±1.5	1	2.0	6.0
177-424	10mm	32	—	10	A	±10	±1.5	1	2.0	6.0
177-425	12mm	32	—	10	A	±10	±1.5	1	2.0	6.0
177-427	16mm	45	—	10	A	±10	±1.5	1	2.0	6.0
177-429	20mm	45	—	10	A	±10	±1.5	1	2.0	6.0
177-430	25mm	53	—	15	A	±10	±1.5	1	3.2	8.6
177-431	30mm	71	—	15	A	±10	±1.5	1	3.2	8.6
177-432	35mm	71	—	15	A	±10	±1.5	1	3.2	8.6
177-433	40mm	71	—	15	A	±10	±1.5	1	3.2	8.6
177-434	45mm	85	—	15	A	±10	±1.5	1	3.2	8.6

Inch

Order No.	Nominal size ød	Dimensions (mm)			Type	Accuracy				
		øD	øE	T		Tolerance between the nominal size and the actual diameter (inch)	Uncertainty of marked diameter value (inch)*1	Roundness/ Cylindricity (inch)*2	Distance from the side face H (mm)	Size of warranted calibration surface K (mm)
177-518	.16″	25	—	7	A	±.0004″	±.00006″	.00004″	1.5	4.0
177-520	.24″	25	—	7	A	±.0004″	±.00006″	.00004″	1.5	4.0
177-522	.275″	25	—	7	A	±.0004″	±.00006″	.00004″	1.5	4.0
177-523	.35″	32	—	10	A	±.0004″	±.00006″	.00004″	1.8	6.4
177-524	.425″	32	—	10	A	±.0004″	±.00006″	.00004″	1.8	6.4
177-525	.5″	32	—	10	A	±.0004″	±.00006″	.00004″	1.8	6.4
177-527	.65″	45	—	10	A	±.0004″	±.00006″	.00004″	1.8	6.4
177-529	.8″	45	—	10	A	±.0004″	±.00006″	.00004″	1.8	6.4
177-530	1″	53	—	15	A	±.0004″	±.00006″	.00004″	3.0	9.0
177-531	1.2″	71	—	15	A	±.0004″	±.00006″	.00004″	3.0	9.0
177-532	1.4″	71	—	15	A	±.0004″	±.00006″	.00004″	3.0	9.0
177-533	1.6″	71	—	15	A	±.0004″	±.00006″	.00004″	3.0	9.0
177-534	1.8″	85	—	15	A	±.0004″	±.00006″	.00004″	3.0	8.0

*1 Actual diameter is marked in 0.001 mm increments.
*2 Cylindricity is defined as per JIS B 0621 definitions and designations of geometrical deviations, Section 4.4 "Cylindricity." Cylindricity is measured using three cross-sections between the top and bottom face of a ring, namely, close to the face near each sides and the center.

D

Small Tool Instruments
Calipers
Height Gages
Depth Gages



Digimatic Caliper



Digimatic Height Gages



Linear Height



Depth Gages





ABSOLUTE Digimatic Caliper

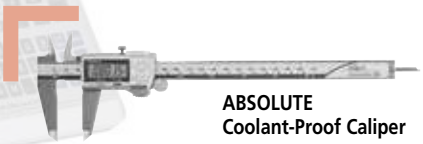

ABSOLUTE Coolant-Proof Caliper



Super Caliper

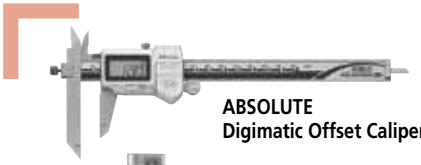

ABSOLUTE Digimatic Offset Caliper

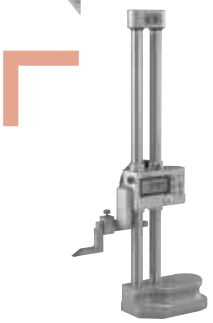

Digimatic Height Gage

INDEX

Calipers	
Super Caliper-Solar Powered	D-2
ABSOLUTE Solar Caliper	D-3
ABSOLUTE Coolant-Proof Caliper	D-4,5
ABSOLUTE Digimatic Caliper	D-6,7
Dial Caliper	D-8,9
Vernier Caliper	D-10-14
ABSOLUTE Digimatic & Vernier Caliper	D-15
Long-Jaw Vernier Caliper	D-16
ABSOLUTE Digimatic Caliper	D-17
Digimatic Carbon-Fiber Caliper	D-18,19
ABSOLUTE Coolant-Proof Carbon-Fiber Caliper	D-20
ABSOLUTE Back-Jaw Centerline Caliper	D-21
Offset Caliper	D-22
Offset Centerline Caliper	D-23
Point Caliper	D-24
Blade-Type Caliper	D-25
Neck Caliper	D-26
Tube Thickness Caliper	D-27
ABSOLUTE Low-Force Caliper	D-28
ABSOLUTE Snap Caliper	D-28
Scribing Caliper	D-29
ABSOLUTE Inside Caliper	D-30,31
MyCAL-Lite	D-32
Center-Line Gage	D-33
Depth Base Attachment	D-33
Quick Guide to Precision Measuring Instruments - Calipers	D-34,35
Digimatic Height Gages	
Linear Height LH-600E	D-36,37
QM-Height	D-38,39
Digimatic Height Gage	D-40,41
Dial Height Gage	D-42
ABSOLUTE Digimatic Height Gage	D-43,44
Vernier Height Gage	D-45,46
Carbide-Tipped Scriber	D-47
Optional Accessories for Height Gages	D-47
Quick Guide to Precision Measuring Instruments - Height Gages	D-48
CERA Caliper Checker	D-49
Depth Gages	
Depth Micrometer	D-50,51
Depth Micro Checker	D-51
ABSOLUTE Digimatic Depth Gage	D-52
Tire-Tread Depth Gage	D-53
ABSOLUTE Point-Type Digimatic Depth Gage	D-53
Vernier Depth Gage	D-54,55
ABSOLUTE Digimatic Depth Gage	D-55
Dial-Depth Gage	D-56
Extension Bases	D-56
ABSOLUTE Digimatic/Dial Depth Gage	D-57,58

Mitutoyo

Super Caliper--Solar Powered

SERIES 500 — No battery or origin reset needed for IP67 Digital Caliper

FEATURES

- With no annoying origin restoration necessary, a measurement can be started at any time and without restrictions on operating speed.

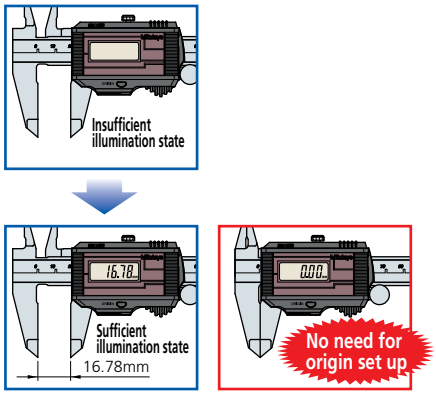

- This unique* eco-friendly solar-powered Super Caliper requires no battery.
  *According to Mitutoyo investigation in January,2005
- The impact resistance of the display unit has been increased for improved usability in workshop conditions.
- IP67 protection ensures waterproof reliability.
- This Super Caliper uses components that do not contain harmful substances and is compatible with RoHS Directives.
- Supplied in fitted plastic case.

Improvement in surface finish of beam

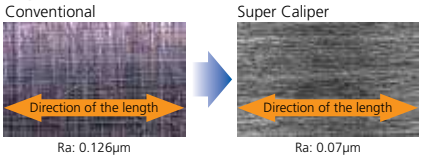

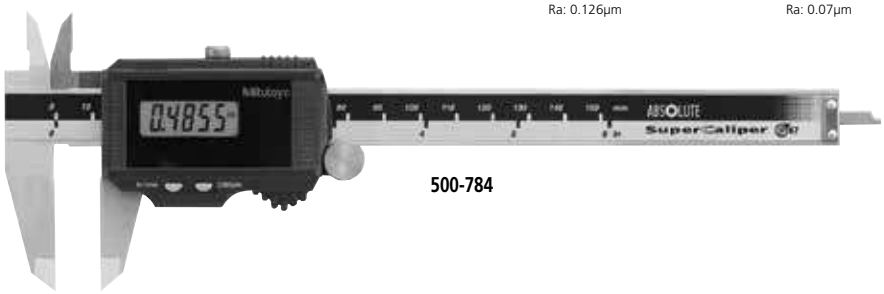

500-784

SPECIFICATIONS

Metric

Range	Order No.	Accuracy	Resolution
0 - 150mm	**500-776**	±0.02mm	0.01mm
0 - 150mm	**500-774***	±0.02mm	0.01mm
0 - 200mm	**500-777**	±0.02mm	0.01mm
0 - 200mm	**500-775***	±0.02mm	0.01mm

*Without SPC data output

Inch/Metric

Range	Order No.	Accuracy	Resolution
0 - 6" / 0 - 150mm	**500-786**	±.001"	.0005" / 0.01mm
0 - 6" / 0 - 150mm	**500-784***	±.001"	.0005" / 0.01mm
0 - 8" / 0 - 200mm	**500-787**	±.001"	.0005" / 0.01mm
0 - 8" / 0 - 200mm	**500-785***	±.001"	.0005" / 0.01mm

*Without SPC data output

DIMENSIONS AND MASS

Unit: mm

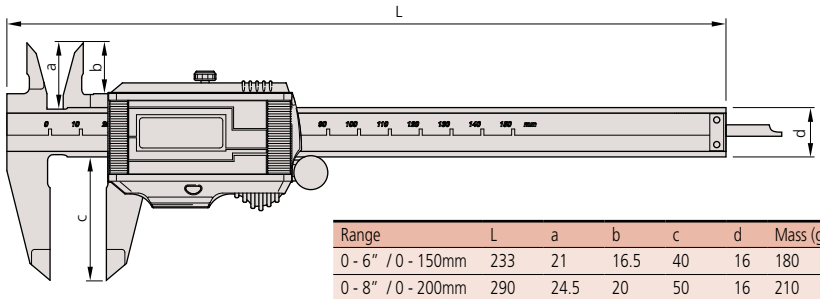

Range	L	a	b	c	d	Mass (g)
0 - 6" / 0 - 150mm	233	21	16.5	40	16	180
0 - 8" / 0 - 200mm	290	24.5	20	50	16	210

Jaw thickness: 3.5mm

Technical Data

Accuracy: Refer to the list of specifications
Resolution: .0005"/0.01mm or 0.01mm
Repeatability: .0005" / 0.01mm
Display: LCD
Length standard: ABSOLUTE electromagnetic induction linear encoder
Max. response speed: Unlimited
Battery: Solar cell*
Dust/Water protection level: IP67
*Can be used continuously above 60 lux ambient illumination.

Function

Origin-set, inch/mm conversion (on inch/metric models only)
Alarm: Counting value composition error

Optional Accessories

05CZA624: SPC cable with data switch (40" / 1m)
05CZA625: SPC cable with data switch (80" / 2m)

IP67 protection level

Level 6: Dust-tight
No ingress of dust.
Level 7: Protected against the effects of temporary immersion in water.
Ingress of water in quantities causing harmful effects shall not be possible when the enclosure is temporarily immersed 1 meter in water under standardized conditions of pressure and time (30 min.).

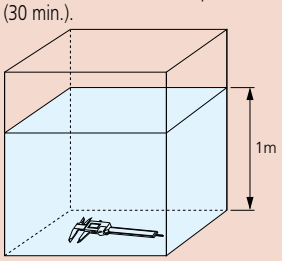

About the charge function (Super Caliper)

The minimum illumination required in the uncharged state is 60 lux. As shown in the table, JIS Z 9110 Artificial Illumination Intensity Standard, this Super Caliper can be used without problems in a normal work environment.

The charge function allows the operator to use this Super Caliper without interrupting work even if the ambient illumination is temporarily insufficient.

- In the fully charged state, this Super Caliper can operate for approximately an hour in an environment of 50lux illumination (less than the minimum necessary illumination intensity).
- The time necessary for full charge differs, depending on the charging conditions. If this Super Caliper is left unused in an illumination of 500 lux (usual for manufacturing environments), it takes approximately one hour to reach full charge.

SPC

ABSOLUTE®
Absolute System Patented by MITUTOYO

ABSOLUTE Super Caliper

SERIES 500 — No battery or origin reset needed

Mitutoyo's Absolute Solar Digimatic Caliper retains its origin point for the entire life of the caliper, even the display turns off. At 60 Lux and higher, the ABSOLUTE solar caliper is turned on ready to start measurement.

FEATURES

- No more repeated zero setting caused by low-light intensity.
- Hard-coated solar panel for increased durability.
- No fear for overspeed errors.
- With thumb roller.
- Supplied in fitted plastic case.

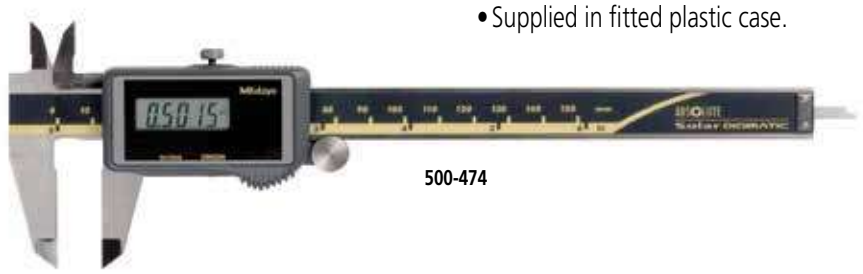

500-474

Technical Data

Accuracy: Refer to the list of specifications
Resolution: .0005"/0.01mm or 0.01mm
Repeatability: .0005" / 0.01mm
Display: LCD
Length standard: ABSOLUTE electrostatic capacitance type linear encoder
Max. response speed: Unlimited
Battery: Solar cell*
*Can be used continuously above 60 lux ambient illumination.

Function

Origin-set, Data hold, Data output,
inch/mm conversion (on inch/metric models only)
Alarm: Counting value composition error

Optional Accessories

959143: Data hold unit (SPC output model only)
959149: SPC cable with data switch (40" / 1m)
959150: SPC cable with data switch (80" / 2m)

SPECIFICATIONS

Metric

Range	Order No.	Accuracy	Resolution	Remarks
0 - 100mm	**500-443**	±0.02mm	0.01mm	ø1.9mm round depth bar
0 - 100mm	**500-453***	±0.02mm	0.01mm	ø1.9mm round depth bar
0 - 150mm	**500-444**	±0.02mm	0.01mm	
0 - 150mm	**500-454***	±0.02mm	0.01mm	
0 - 200mm	**500-445**	±0.02mm	0.01mm	
0 - 200mm	**500-455***	±0.02mm	0.01mm	

*without SPC data output

Inch/Metric

Range	Order No.	Accuracy	Resolution	Remarks
0 - 4" / 0 - 100mm	**500-463**	±.001"	.0005" / 0.01mm	.075" round depth bar
0 - 4" / 0 - 100mm	**500-473***	±.001"	.0005" / 0.01mm	.075" round depth bar
0 - 6" / 0 - 150mm	**500-464**	±.001"	.0005" / 0.01mm	
0 - 6" / 0 - 150mm	**500-474***	±.001"	.0005" / 0.01mm	
0 - 8" / 0 - 200mm	**500-465**	±.001"	.0005" / 0.01mm	
0 - 8" / 0 - 200mm	**500-475***	±.001"	.0005" / 0.01mm	

*without SPC data output

DIMENSIONS AND MASS

Unit: mm

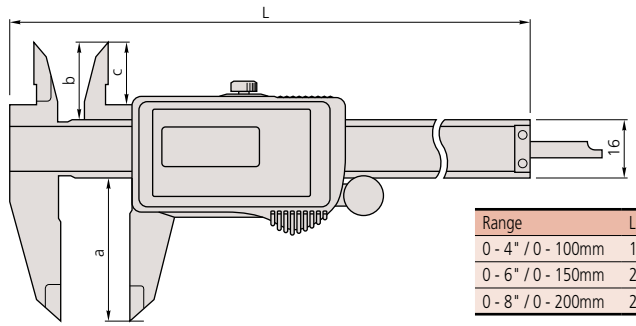

Range	L	a	b	c	Mass (g)
0 - 4" / 0 - 100mm	182	40	21	16.5	125
0 - 6" / 0 - 150mm	233	40	21	16.5	150
0 - 8" / 0 - 200mm	290	50	24.5	20	180

Mitutoyo

ABSOLUTE Coolant-Proof Caliper

SERIES 500 — with Dust/Water Protection Conforming to IP67 Level

FEATURES

- Can be used in workshop conditions exposed to coolant, water, dust or oil.
- Easy to use - no need to wipe or clean the scale.
- Advanced design.
- Character height increased from 7.4mm to 9.0mm for improved readability.
- Redesigned battery cover eliminates the need for a screwdriver.
- Incorporates absolute measurement system.
- Automatic power-on/off.
- Data output function.
- With thumb roller.
- Supplied in fitted plastic case.



500-752-20



500-763-20

COOLANT PROOF™ IP67

COOLANT PROOF is the universal term of Mitutoyo Digimatic Small Tool Instruments that are free from measurement error and physical deterioration due to routine exposure to water, cutting oil or coolant. This high performance is achieved by using encoders that are inherently immune to contamination, where exposure is inevitable, combined with comprehensive sealing techniques and extremely oil-resistant materials to guarantee a long working life under normal operating conditions.



Built-in ABS (absolute) scale means that these calipers are ready to use immediately after power-on without origin resetting. It's as easy as vernier caliper measurements.

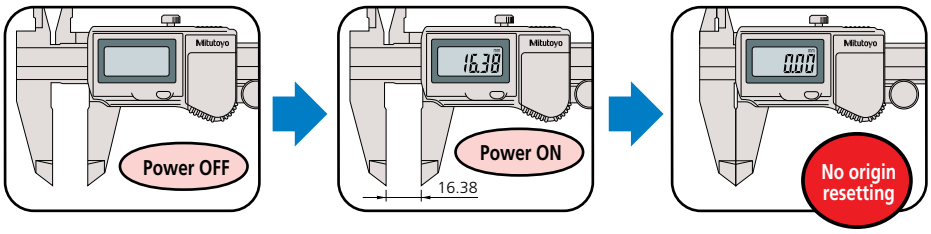

Certificate of inspection



CERTIFICATE OF INSPECTION / CERTIFICAT DE CONTROLE

Mitutoyo Corporation

Technical Data

Accuracy: Refer to the list of specifications
Resolution: .0005"/0.01mm or 0.01mm
Repeatability: .0005" / 0.01mm
Display: LCD
Length standard: ABSOLUTE electromagnetic induction linear encoder
Max. response speed: Unlimited
Battery: SR44 (1 pc./2 pcs*), **938882**
Battery life: Approx. 5 years under normal use (1 year: over 12" / 300mm models)
Dust/Water protection level: IP67
*0 - 300mm model

Function

Origin-set, Zero-setting, Automatic power on/off, Data output, inch/mm conversion (on inch/metric models only)
Alarm: Low voltage, Counting value composition error

Optional Accessories

05CZA624: SPC cable with data switch (40" / 1m)
05CZA625: SPC cable with data switch (80" / 2m)



05CZA624



Measurement data output function is available with a water-resistant SPC cable.

Air leakage detection system used for water-proof testing

Generally, air leakage tests are performed to evaluate water resistance. Testing begins by placing a measuring tool into the capsule. Next, air with equivalent pressure is supplied to the capsule and the master, then the valves are closed. If none of the air in the capsule seeps into the measuring tool, the capsule's air pressure will remain equal to that of the master, and the differential pressure gage will continue to point to the center. However, if some air seeps into the measuring tool, it will create an air pressure difference in the amount indicated by the differential pressure gage. Thus, detection of air pressure differences is used as a criterion for judging leakage. Every single unit of the ABS Coolant Proof calipers and Coolant Proof micrometer is tested this way for air leakage to help ensure product quality.

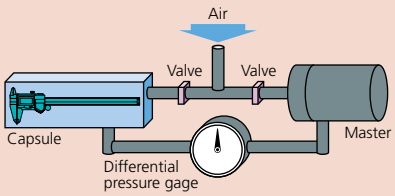



IP67 protection level

Level 6: Dust-tight
No ingress of dust.

Level 7: Protected against the effects of temporary immersion in water.
Ingress of water in quantities causing harmful effects shall not be possible when the enclosure is temporarily immersed 1 meter in water under standardized conditions of pressure and time (30 min.).

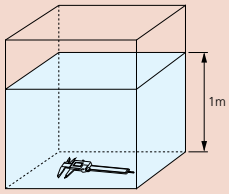

SPECIFICATIONS

Metric IP67 model

Range	Order No.	Accuracy	Resolution	Remarks
0-150mm	**500-702-20***	+/-0.02mm	0.01mm	
0-150mm	**500-712-20**	+/-0.02mm	0.01mm	
0-150mm	**500-719-20**	+/-0.02mm	0.01mm	dia. 1.9mm rod depth bar
0-150mm	**500-721-20**	+/-0.02mm	0.01mm	carbide-tipped jaws for ID measurement
0-150mm	**500-723-20**	+/-0.02mm	0.01mm	carbide-tipped jaws for OD & ID measurement
0-200mm	**500-703-20***	+/-0.02mm	0.01mm	
0-200mm	**500-713-20**	+/-0.02mm	0.01mm	
0-200mm	**500-722-20**	+/-0.02mm	0.01mm	carbide-tipped jaws for ID measurement
0-200mm	**500-724-20**	+/-0.02mm	0.01mm	carbide-tipped jaws for OD & ID measurement
0-300mm	**500-704-10***	+/-0.03mm	0.01mm	
0-300mm	**500-714-10**	+/-0.03mm	0.01mm	

*without SPC data output

Inch/Metric IP67 model

Range	Order No.	Accuracy	Resolution	Remarks
0-6"/0-150mm	**500-752-20***	+/-.001"	.0005"/0.01mm	
0-6"/0-150mm	**500-762-20**	+/-.001"	.0005"/0.01mm	
0-6"/0-150mm	**500-768-20***	+/-.001"	.0005"/0.01mm	.075" rod depth bar
0-6"/0-150mm	**500-769-20**	+/-.001"	.0005"/0.01mm	.075" rod depth bar
0-6"/0-150mm	**500-731-20***	+/-.001"	.0005"/0.01mm	carbide-tipped jaws for OD measurement
0-6"/0-150mm	**500-735-20**	+/-.001"	.0005"/0.01mm	carbide-tipped jaws for OD measurement
0-6"/0-150mm	**500-733-20***	+/-.001"	.0005"/0.01mm	carbide-tipped jaws for OD & ID measurement
0-6"/0-150mm	**500-737-20**	+/-.001"	.0005"/0.01mm	carbide-tipped jaws for OD & ID measurement
0-8"/0-200mm	**500-753-20***	+/-.001"	.0005"/0.01mm	
0-8"/0-200mm	**500-763-20**	+/-.001"	.0005"/0.01mm	
0-8"/0-200mm	**500-732-20***	+/-.001"	.0005"/0.01mm	carbide-tipped jaws for OD measurement
0-8"/0-200mm	**500-736-20**	+/-.001"	.0005"/0.01mm	carbide-tipped jaws for OD measurement
0-8"/0-200mm	**500-734-20***	+/-.001"	.0005"/0.01mm	carbide-tipped jaws for OD & ID measurement
0-8"/0-200mm	**500-738-20**	+/-.001"	.0005"/0.01mm	carbide-tipped jaws for OD & ID measurement
0-12"/0-300mm	**500-754-10***	+/-.0015"	.0005"/0.01mm	
0-12"/0-300mm	**500-764-10**	+/-.0015"	.0005"/0.01mm	

*without SPC data output

DIMENSIONS AND MASS

Unit: mm

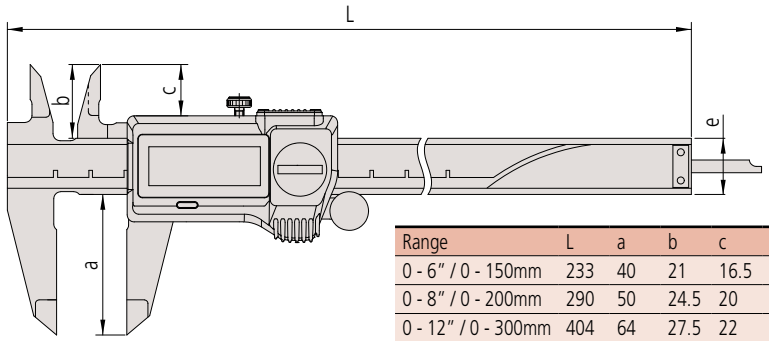

Range	L	a	b	c	e	Mass (g)
0 - 6" / 0 - 150mm	233	40	21	16.5	16	168
0 - 8" / 0 - 200mm	290	50	24.5	20	16	198
0 - 12" / 0 - 300mm	404	64	27.5	22	20	350

ABSOLUTE Digimatic Caliper

SERIES 500 — with Exclusive ABSOLUTE Encoder Technology

Mitutoyo's absolute Digimatic Caliper is the next generation of electronic calipers. It keeps track of its origin point once set. Whenever turned on, the large LCD displays the actual slider position ready to start measurement. No more repeated zero setting is necessary with the absolute encoder technology, as well as no more concern for overspeed errors.

High-quality guide surface finish for smooth slider movement.

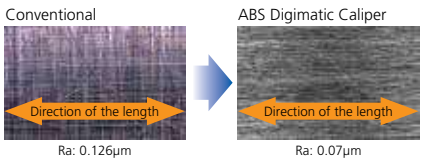

FEATURES

- Large and clear LCD readout.
- The ZERO/ABS key allows the display to be zero-set at any slider position along the scale for incremental comparison measurements. This switch also will allow return to the absolute (ABS) coordinate and display of the true position from the origin point (usually jaws-closed point).
- Data Hold Unit (959143) is optional.
- Carbide-tipped jaw-type calipers are also available.
- Thumb roller included only on calipers up to and including 12" or 300mm.
- Supplied in fitted plastic case. Except 40" / 1000mm supplied in wooden case.

SPC

PROPRIETARY INSPECTION CERTIFICATE

ABSOLUTE AOS DIGIMATIC

AOS: Advanced Onsite Sensor

The new Mitutoyo ABS Digimatic Caliper line with exclusive AOS sensor technology. The patented Advanced Onsite Sensor (AOS) offers improved measurement dependability by increasing resistance to harsh workshop conditions.

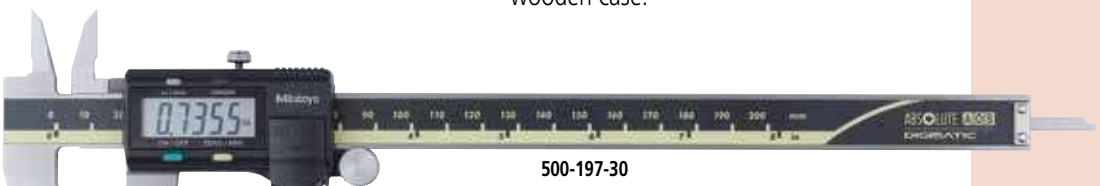

500-197-30

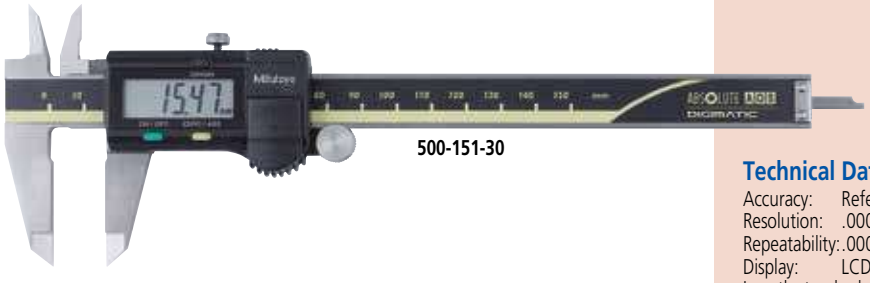

500-151-30

DIMENSIONS AND MASS

Unit: mm

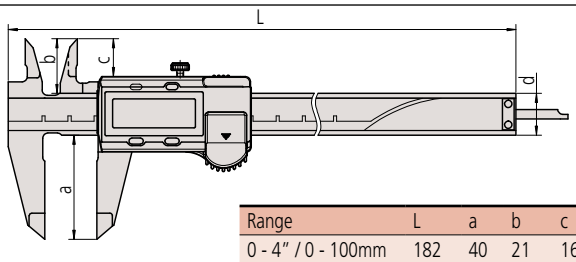

Range	L	a	b	c	d	Mass (g)
0 - 4" / 0 - 100mm	182	40	21	16.5	16	143
0 - 6" / 0 - 150mm	233	40	21	16.5	16	168
0 - 8" / 0 - 200mm	290	50	24.5	20	16	198
0 - 12" / 0 - 300mm	403	64	27.5	22	20	350

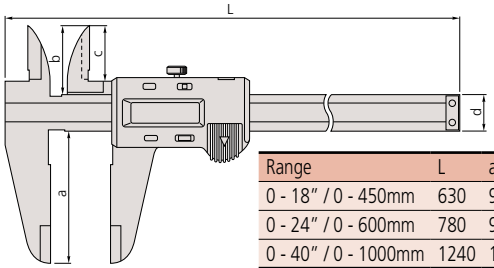

Range	L	a	b	c	d	Mass (g)
0 - 18" / 0 - 450mm	630	90	47	38	25	1170
0 - 24" / 0 - 600mm	780	90	47	38	25	1350
0 - 40" / 0 - 1000mm	1240	130	61	50	32	3300

Technical Data

Accuracy: Refer to the list of specifications
Resolution: .0005"/0.01mm or 0.01mm
Repeatability: .0005"/ 0.01mm
Display: LCD
Length standard:
ABSOLUTE electromagnetic induction type linear encoder (200mm and smaller models)
ABSOLUTE electrostatic capacitance type linear encoder (300mm and larger models)
Max. response speed: Unlimited
Battery: SR44 (1 pc.), **938882**
Battery life: Approx. 3.5 years under normal use

Function

Origin-set, Zero-setting, Data output,
inch/mm conversion (on inch/metric models only)
Alarm: Low voltage, Counting value composition error

Optional Accessories

959143: Data hold unit
959149: SPC cable with data switch (40" / 1m)
959150: SPC cable with data switch (80" / 2m)

959143



959149



500-506-10

500-502-10

500-501-10

500-500-10

SPECIFICATIONS

Metric

Range	Order No.	Accuracy	Resolution	Remarks
0 - 100mm	**500-150-30**	±0.02mm	0.01mm	ø1.9mm rod depth bar
0 - 150mm	**500-151-30**	±0.02mm	0.01mm	—
0 - 150mm	**500-154-30**	±0.02mm	0.01mm	Carbide-tipped jaws for OD measurement
0 - 150mm	**500-155-30**	±0.02mm	0.01mm	Carbide-tipped jaws for OD & ID measurement
0 - 150mm	**500-158-30**	±0.02mm	0.01mm	ø1.9mm rod depth bar
0 - 200mm	**500-152-30**	±0.02mm	0.01mm	—
0 - 200mm	**500-156-30**	±0.02mm	0.01mm	Carbide-tipped jaws for OD measurement
0 - 200mm	**500-157-30**	±0.02mm	0.01mm	Carbide-tipped jaws for OD & ID measurement
0 - 300mm	**500-153**	±0.03mm	0.01mm	—
0 - 450mm	**500-500-10**	±0.05mm	0.01mm	Without Thumb Roller
0 - 600mm	**500-501-10**	±0.05mm	0.01mm	Without Thumb Roller
0 - 1000mm	**500-502-10**	±0.07mm	0.01mm	Without Thumb Roller

Inch/Metric

Range	Order No.	Accuracy	Resolution	Remarks
0 - 4" / 0 - 100mm	**500-170-30**	±.001"	.0005" / 0.01mm	.075" rod depth bar
0 - 4" / 0 - 100mm	**500-195-30***	±.001"	.0005" / 0.01mm	.075" rod depth bar
0 - 6" / 0 - 150mm	**500-171-30**	±.001"	.0005" / 0.01mm	—
0 - 6" / 0 - 150mm	**500-174-30**	±.001"	.0005" / 0.01mm	Carbide-tipped jaws for OD measurement
0 - 6" / 0 - 150mm	**500-175-30**	±.001"	.0005" / 0.01mm	Carbide-tipped jaws for OD & ID measurement
0 - 6" / 0 - 150mm	**500-178-30**	±.001"	.0005" / 0.01mm	.075" rod depth bar
0 - 6" / 0 - 150mm	**500-196-30***	±.001"	.0005" / 0.01mm	—
0 - 6" / 0 - 150mm	**500-159-30***	±.001"	.0005" / 0.01mm	Carbide-tipped jaws for OD measurement
0 - 6" / 0 - 150mm	**500-160-30***	±.001"	.0005" / 0.01mm	Carbide-tipped jaws for OD & ID measurement
0 - 8" / 0 - 200mm	**500-172-30**	±.001"	.0005" / 0.01mm	—
0 - 8" / 0 - 200mm	**500-176-30**	±.001"	.0005" / 0.01mm	Carbide-tipped jaws for OD measurement
0 - 8" / 0 - 200mm	**500-177-30**	±.001"	.0005" / 0.01mm	Carbide-tipped jaws for OD & ID measurement
0 - 8" / 0 - 200mm	**500-197-30***	±.001"	.0005" / 0.01mm	—
0 - 8" / 0 - 200mm	**500-163-30***	±.001"	.0005" / 0.01mm	Carbide-tipped jaws for OD measurement
0 - 8" / 0 - 200mm	**500-164-30***	±.001"	.0005" / 0.01mm	Carbide-tipped jaws for OD & ID measurement
0 - 12" / 0 - 300mm	**500-173**	±.0015"	.0005" / 0.01mm	—
0 - 12" / 0 - 300mm	**500-167**	±.0015"	.0005" / 0.01mm	Carbide-tipped jaws for OD measurement
0 - 12" / 0 - 300mm	**500-168**	±.0015"	.0005" / 0.01mm	Carbide-tipped jaws for OD & ID measurement
0 - 12" / 0 - 300mm	**500-193***	±.0015"	.0005" / 0.01mm	—
0 - 12" / 0 - 300mm	**500-165***	±.0015"	.0005" / 0.01mm	Carbide-tipped jaws for OD measurement
0 - 12" / 0 - 300mm	**500-166***	±.0015"	.0005" / 0.01mm	Carbide-tipped jaws for OD & ID measurement
0 - 18" / 0 - 450mm	**500-505-10**	±.002"	.0005" / 0.01mm	Without Thumb Roller
0 - 24" / 0 - 600mm	**500-506-10**	±.002"	.0005" / 0.01mm	Without Thumb Roller
0 - 40" / 0 - 1000mm	**500-507-10**	±.003"	.0005" / 0.01mm	Without Thumb Roller

*without SPC data output

Mitutoyo

Dial Caliper

SERIES 505

FEATURES

- New designed dial movement for ultra-smooth sliding and high-shock protection.
- Improved finish on sliding surfaces for longevity.
- New face for improved readability.
- Removal of TiN coating on sliding surfaces without sacrificing wear life.
- Lock screw for dial bezel and for holding the sliding jaw position.
- Can measure OD, ID, depth and steps.
- Models available with carbide-tipped OD and ID jaws.
- Supplied in fitted plastic case.

Mitutoyo guarantees the product quality.
PROPRIETARY INSPECTION CERTIFICATE
Mitutoyo guarantees the product quality.



505-746

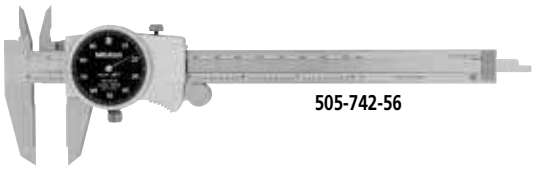

505-742-56



505-745

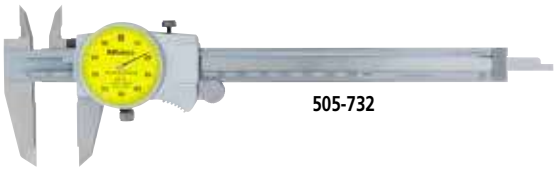

505-732



.100" per revolution



.200" per revolution



1mm per revolution



2mm per revolution

SPECIFICATIONS

Metric 1mm Per One Revolution

Range	Order No.	Accuracy	Graduation	Remarks
0-150mm	**505-732**	+/-0.03mm	0.01mm	—
0-200mm	**505-733**	+/-0.03mm	0.01mm	—

Metric 2mm Per One Revolution

Range	Order No.	Accuracy	Graduation	Remarks
0-150mm	**505-730**	+/-0.03mm	0.02mm	—
0-150mm	**505-734**	+/-0.03mm	0.02mm	Carbide-tipped jaws for OD measurement
0-150mm	**505-735**	+/-0.03mm	0.02mm	Carbide-tipped jaws for OD & ID measurement
0-200mm	**505-731**	+/-0.03mm	0.02mm	—
0-300mm	**505-745**	+/-0.04mm	0.02mm	—

Measurement Applications

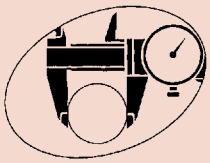

1. Outside measurement

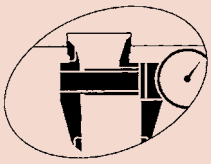

2. Inside measurement

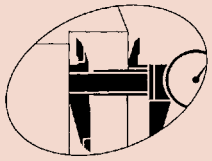

3. Step measurement

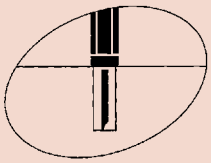

4. Depth measurement

SPECIFICATIONS

Inch .1″ Per Revolution

Range	Order No.	Accuracy	Graduation	Remarks
0-6″	**505-742**	+/-.001″	.001″	-
0-6″	**505-742-51**	+/-.001″	.001″	Blue Dial Face
0-6″	**505-742-52**	+/-.001″	.001″	Purple Dial Face
0-6″	**505-742-53**	+/-.001″	.001″	Green Dial Face
0-6″	**505-742-54**	+/-.001″	.001″	Red Dial Face
0-6″	**505-742-55**	+/-.001″	.001″	Orange Dial Face
0-6″	**505-742-56**	+/-.001″	.001″	Black Dial Face
0-6″	**505-736**	+/-.001″	.001″	Carbide-tipped jaws for OD measurement
0-6″	**505-738**	+/-.001″	.001″	Carbide-tipped jaws for OD & ID measurement
0-8″	**505-743**	+/-.002″	.001″	-
0-8″	**505-737**	+/-.002″	.001″	Carbide-tipped jaws for OD measurement
0-8″	**505-739**	+/-.002″	.001″	Carbide-tipped jaws for OD & ID measurement
0-12″	**505-746**	+/-.002″	.001″	—
0-12″	**505-747**	+/-.002″	.001″	Carbide-tipped jaws for OD measurement
0-12″	**505-748**	+/-.002″	.001″	Carbide-tipped jaws for OD & ID

Inch .2″ Per Revolution

Range	Order No.	Accuracy	Graduation	Remarks
0-6″	**505-740**	+/-.001″	.001″	—
0-6″	**505-744**	+/-.001″	.001″	Carbide-tipped jaws for OD measurement
0-8″	**505-741**	+/-.002″	.001″	—
0-12″	**505-749**	+/-.002″	.001″	—
0-12″	**505-750**	+/-.002″	.001″	Carbide-tipped jaws for OD measurement

DIMENSIONS AND MASS

Unit: mm

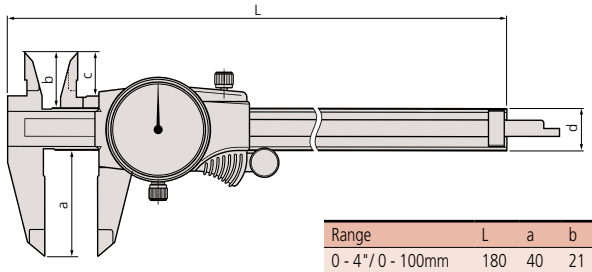

Range	L	a	b	c	d	Mass (g)
0 - 4"/ 0 - 100mm	180	40	21	16.5	16	150
0 - 6"/ 0 - 150mm	231	40	21	16.5	16	175
0 - 8"/ 0 - 200mm	288	50	24.5	20	16	185
0 - 12"/ 0 - 300mm	403	64	27.5	22	20	370

Mitutoyo

Vernier Caliper

SERIES 530 — Standard Model

FEATURES

- Measures OD (outside diameter), ID (inside diameter), depth, and steps.
- The small vernier face angle (14°) provides easy reading.
- Dual reading scales on vernier. (metric/inch and inch models only).
- Lock screw for holding the sliding jaw position.
- Carbide-tipped jaw-type calipers are available.
- Supplied with vinyl holster in fitted carton. Except 24" / 600mm models are carton only. 40" / 1000mm supplied in wooden case.

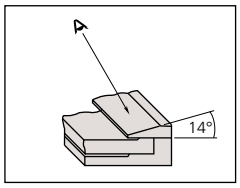

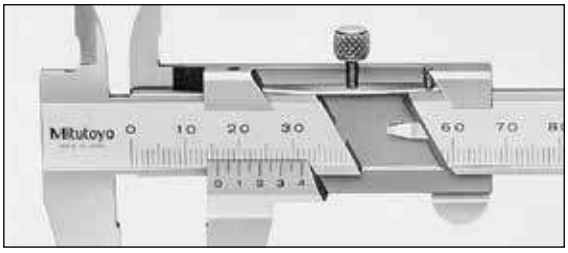

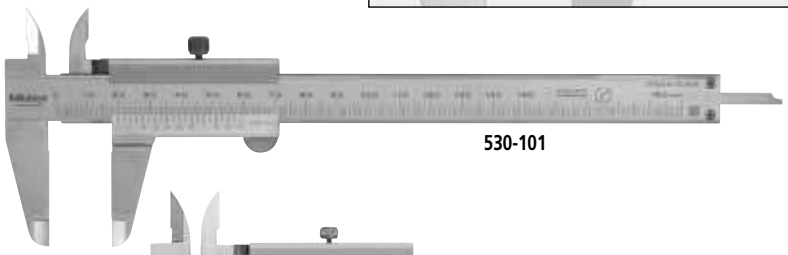

530-101

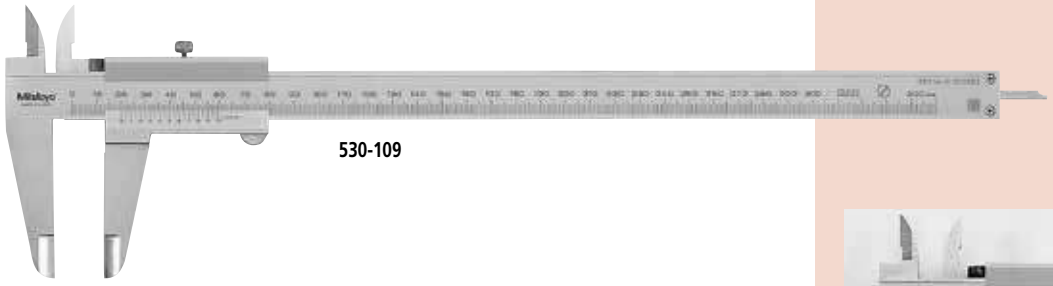

530-109

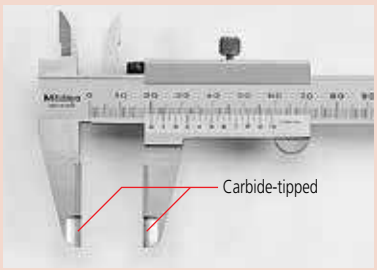

Carbide-tipped jaw type



Round depth bar type

DIMENSIONS AND MASS

Unit: mm

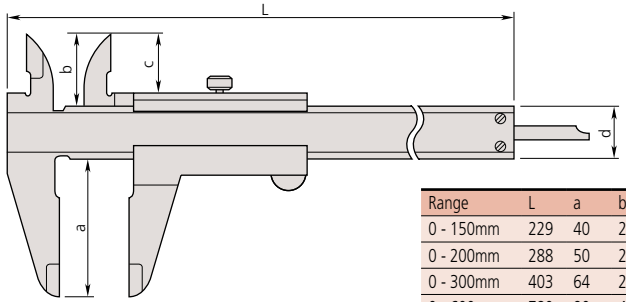

Range	L	a	b	c	d	Mass (g)
0 - 150mm	229	40	21	17	16	143
0 - 200mm	288	50	24.5	20.5	16	180
0 - 300mm	403	64	27.5	22	20	335
0 - 600mm	780	90	47	38	25	1,300
0 - 1000mm	1240	130	60	50	32	3,300

Measurement Applications

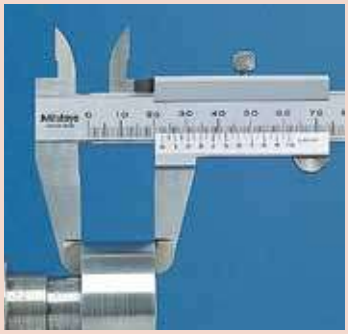

OD measurement

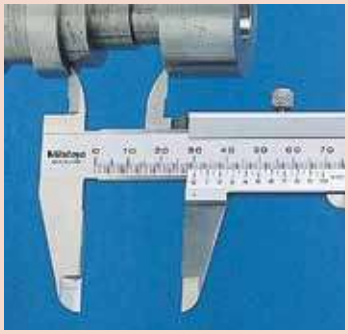

ID measurement



Step measurement

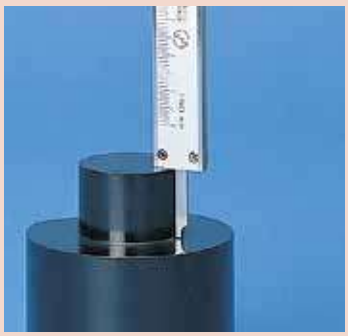

Depth measurement

SPECIFICATIONS

Metric

Range	Order No.	Accuracy	Graduation	Remarks
0 - 150mm	**530-102**	±0.05mm	0.05mm	ø 1.9mm Depth bar
0 - 150mm	**530-101**	±0.05mm	0.05mm	—
0 - 150mm	**530-320**	±0.05mm	0.05mm	Carbide-tipped jaws for OD measurement
0 - 150mm	**530-335**	±0.05mm	0.05mm	Carbide-tipped jaws for OD & ID measurement
0 - 150mm	**530-122***	±0.03mm	0.02mm	High-accuracy model
0 - 200mm	**530-108**	±0.05mm	0.05mm	—
0 - 200mm	**530-321**	±0.05mm	0.05mm	Carbide-tipped jaws for OD measurement
0 - 200mm	**530-123***	±0.03mm	0.02mm	High-accuracy model
0 - 300mm	**530-109**	±0.08mm	0.05mm	—
0 - 300mm	**530-322**	±0.08mm	0.05mm	Carbide-tipped jaws for OD measurement
0 - 300mm	**530-124***	±0.04mm	0.02mm	High-accuracy model: ±0.04mm
0 - 600mm	**530-501****	±0.1mm	0.05mm	—
0 - 1000mm	**530-502 ****	±0.15mm	0.05mm	—

*Graduation: 0.02mm
**No depth measuring bar

Metric/Inch

with metric/inch dual scale

Range	Order No.	Accuracy	Vernier Graduation		Remarks
			Lower Scale	Upper Scale	
0 - 150mm / 0 - 6″	**530-104**	±0.05mm	0.05mm	1/128"	—
0 - 150mm / 0 - 6″	**530-316**	±0.05mm	0.05mm	1/128"	—
0 - 150mm / 0 - 6″	**530-312***	±0.03mm	0.02mm	.001"	High-accuracy model
0 - 200mm / 0 - 8″	**530-114**	±0.05mm	0.05mm	1/128"	—
0 - 200mm / 0 - 8″	**530-118***	±0.03mm	0.02mm	.001"	High-accuracy model
0 - 300mm / 0 - 12″	**530-115**	±0.08mm	0.05mm	1/128"	—
0 - 300mm / 0 - 12″	**530-119***	±0.04mm	0.02mm	.001"	High-accuracy model

*Graduation: 0.02mm

Inch

with inch/inch dual scale

Range	Order No.	Accuracy	Vernier Graduation		Remarks
			Lower Scale	Upper Scale	
0 - 6"	**530-105**	±.0015″	.001″	1/128"	—
0 - 8"	**530-116**	±.0015″	.001″	1/128"	—

Mitutoyo

Vernier Caliper

SERIES 531 — with Thumb Clamp

FEATURES

- The slider moves only when the spring loaded thumb clamp is depressed.
- Can measure OD, ID, depth and steps
- Supplied with vinyl holster in fitted carton.

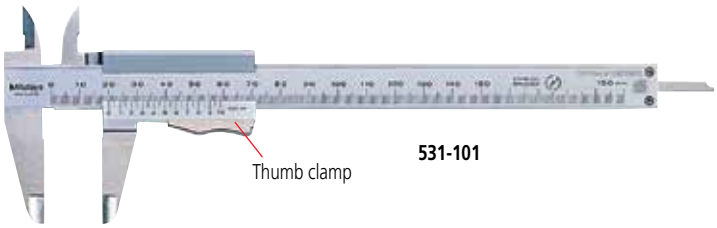

531-101

SPECIFICATIONS

Metric

Range	Order No.	Accuracy	Graduation	Remarks
0 - 150mm	**531-101**	±0.05mm	0.05mm	—
0 - 200mm	**531-102**	±0.05mm	0.05mm	—
0 - 300mm	**531-103**	±0.08mm	0.05mm	—

Metric/Inch with metric/inch dual scale

Range	Order No.	Accuracy	Graduation		Remarks
			Lower Scale	Upper Scale	
0 - 150mm / 0 - 6"	**531-122**	±0.05mm	0.05mm	1/128"	with inch/mm conversion label
0 - 150mm / 0 - 6"	**531-128**	±0.03mm	0.02mm	.001"	High-accuracy model
0 - 200mm / 0 - 8"	**531-108**	±0.05mm	0.05mm	1/128"	—
0 - 200mm / 0 - 8"	**531-129**	±0.03mm	0.02mm	.001"	High-accuracy model
0 - 300mm / 0 - 12"	**531-109**	±0.08mm	0.05mm	1/128"	—
0 - 300mm / 0 - 12"	**531-112**	±0.04mm	0.02mm	.001"	High-accuracy model

DIMENSIONS AND MASS

Unit: mm

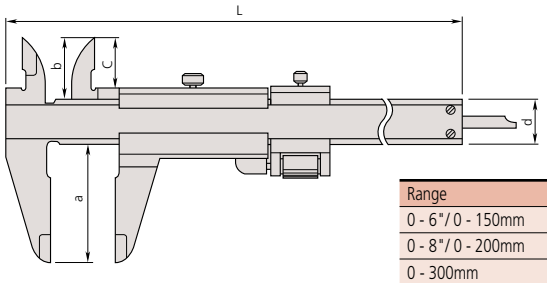

Range	L	a	b	c	d	Mass (g)
0 - 6"/ 0 - 150mm	229	40	21.5	17	16	142
0 - 8"/ 0 - 200mm	288	50	25	20.5	16	175
0 - 300mm	403	64	27.5	22	20	360

Measurement Applications

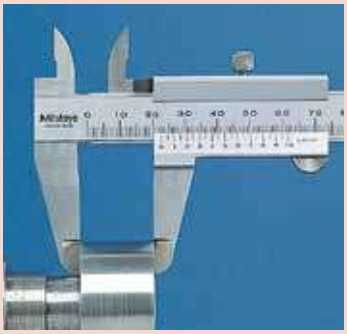

OD measurement

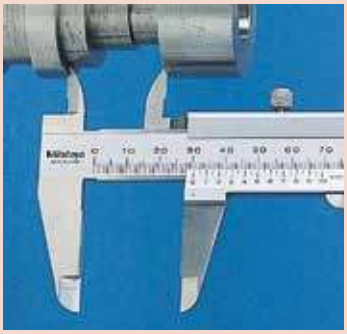

ID measurement



Step measurement



Depth measurement

Vernier Caliper

SERIES 532 — with Fine Adjustment

Measurement Applications

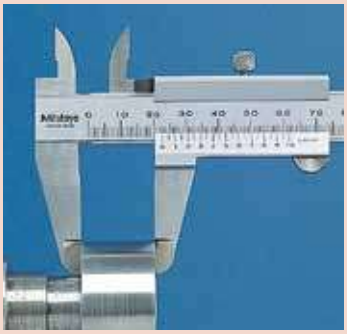

OD measurement

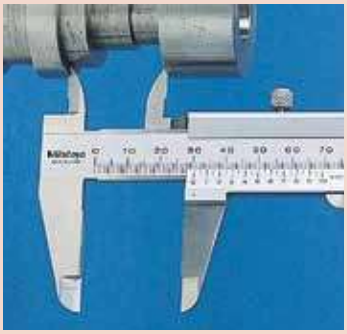

ID measurement



Step measurement

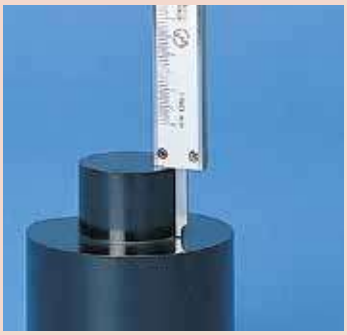

Depth measurement

FEATURES

- Provided with a fine-adjustment carriage to feed the slider finely.
- Can measure OD, ID, depth and steps.
- Supplied with vinyl holster in fitted carton.

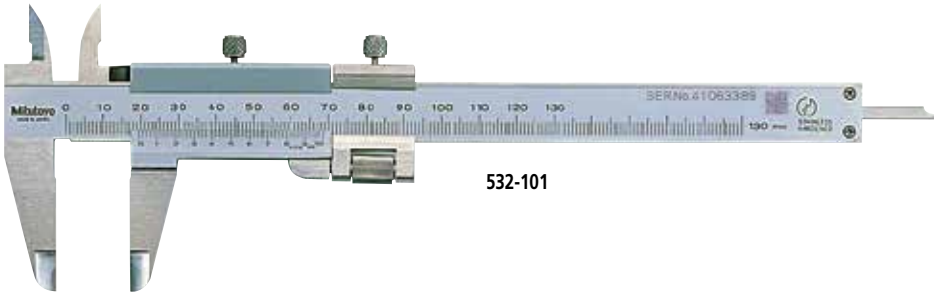

532-101

SPECIFICATIONS

Metric

Range	Order No.	Accuracy	Graduation
0 - 130mm	**532-101**	±0.03mm	0.02mm
0 - 180mm	**532-102**	±0.03mm	0.02mm
0 - 280mm	**532-103**	±0.04mm	0.02mm

Metric/Inch with metric/inch dual scale

Range	Order No.	Accuracy	Graduation	
			Lower Scale	Upper Scale
0 - 130mm / 0 - 5″	**532-119**	±0.03mm	0.02mm	.001"
0 - 180mm / 0 - 7″	**532-120**	±0.03mm	0.02mm	.001"
0 - 280mm / 0 - 11″	**532-121**	±0.04mm	0.02mm	.001"

DIMENSIONS AND MASS

Unit: mm

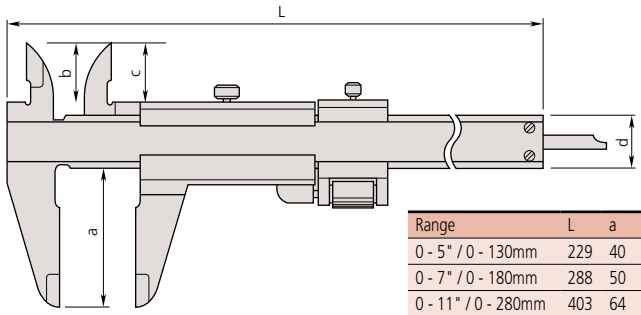

Range	L	a	b	c	d	Mass (g)
0 - 5" / 0 - 130mm	229	40	21.5	17	16	165
0 - 7" / 0 - 180mm	288	50	25	20.5	16	202
0 - 11" / 0 - 280mm	403	64	27.5	22	20	395

Mitutoyo

Vernier Caliper

SERIES 160 — with Nib Style Jaws and Fine Adjustment

FEATURES

- The jaws have round measuring faces for accurate ID measurement.
- With fine adjustment carriage to feed the slider.
- Inside and outside measurements can be directly read from the upper and lower slider graduations, respectively.
- Supplied with vinyl holster in fitted carton. Except 12" / 300mm, 18" / 450mm and 24" / 600mm are fitted carton only. Over 24" / 600mm supplied in wooden case.



SPECIFICATIONS

Metric with metric/metric dual scale

Range*	Order No.	Accuracy	Graduation		Mass (g)
			Lower Scale	Upper Scale	
0 (10) - 300mm	**160-127**	±0.04mm	0.02mm	0.02mm	450
0 (20) - 450mm	**160-128**	±0.05mm	0.02mm	0.02mm	1,200
0 (20) - 600mm	**160-101**	±0.05mm	0.02mm	0.02mm	2,600
0 (20) - 1000mm	**160-104**	±0.07mm	0.02mm	0.02mm	3,500
0 (20) - 1500mm	**160-110**	±0.09mm	0.02mm	0.02mm	4,850
0 (20) - 2000mm	**160-113**	±0.12mm	0.02mm	0.02mm	10,200

*( ): Minimum dimension in ID measurement

Metric/Inch with metric/inch dual scale

Range*	Order No.	Accuracy	Graduation		Mass (g)
			Lower Scale	Upper Scale	
0 (10) - 300mm / 0 (.3") - 12"	**160-150**	±0.04mm	0.02mm	.001"	450
0 (20) - 450mm / 0 (.5") - 18"	**160-151**	±0.05mm	0.02mm	.001"	1,200
0 (20) - 600mm / 0 (.5") - 24"	**160-153**	±0.05mm	0.02mm	.001"	1,400
0 (20) - 1000mm / 0 (1") - 40"	**160-155**	±0.07mm	0.02mm	.001"	3,500
0 (20) - 1500mm / 0 (1") - 60"	**160-157**	±0.09mm	0.02mm	.001"	4,850
0 (20) - 2000mm / 0 (1") - 80"	**160-159**	±0.12mm	0.02mm	.001"	10,200

*( ): Minimum dimension in ID measurement

Inch with inch/inch dual scale

Range*	Order No.	Accuracy	Graduation		Mass (g)
			Lower Scale	Upper Scale	
0 (.3") - 12"	**160-124**	±.0015"	.001"	.001"	450
0 (.5") - 18"	**160-116**	±.002"	.001"	.001"	1,200
0 (.5") - 24"	**160-102**	±.002"	.001"	.001"	1,400
0 (1") - 40"	**160-105**	±.003"	.001"	.001"	3,500
0 (1") - 60"	**160-111**	±.004"	.001"	.001"	4,850
0 (1") - 80"	**160-114**	±.005"	.001"	.001"	10,200

*( ): Minimum dimension in ID measurement

Inch/Metric with inch/metric dual scale

Range*	Order No.	Accuracy	Graduation		Mass (g)
			Lower Scale	Upper Scale	
0 (.3") - 12" / 0 (10) - 300mm	**160-125**	±.0015"	.001"	0.02mm	450
0 (.5") - 18" / 0 (20) - 450mm	**160-119**	±.002"	.001"	0.02mm	1,200
0 (.5") - 24" / 0 (20) - 600mm	**160-103**	±.002"	.001"	0.02mm	1,400
0 (1") - 40" / 0 (20) - 1000mm	**160-106**	±.003"	.001"	0.02mm	3,500
0 (1") - 60" / 0 (20) - 1500mm	**160-112**	±.004"	.001"	0.02mm	4,850
0 (1") - 80" / 0 (20) - 2000mm	**160-115**	±.005"	.001"	0.02mm	10,200

*( ): Minimum dimension in ID measurement

Technical Data

Accuracy: Refer to the list of specifications
Graduation: Refer to the list of specifications



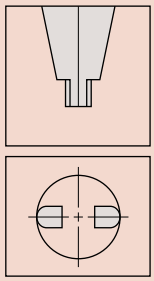

Round surface of jaws for accurate ID measurement.

DIMENSIONS

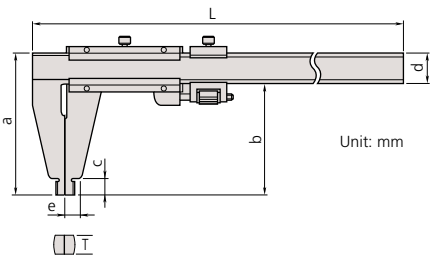

Range	L	a	b	c	d	e	T
0 - 12" / 0 - 300mm	445	95	75	12	20	10	3.8
0 - 18" / 0 - 450mm	630	125	100	18	25	14.8	6
0 - 24" / 0 - 600mm	780	125	100	18	25	14.8	6
0 - 40" / 0 - 1000mm	1240	172	140	24	32	17	8
0 - 60" / 0 - 1500mm	1800	212	180	30	32	19	8
0 - 80" / 0 - 2000mm	2300	220	180	30	40	23	12

ABSOLUTE Digimatic & Vernier Caliper

SERIES 550, 160 — with Nib-Style Jaws

FEATURES

- The rounded faces of the jaws are ideal for accurate ID (inside diameter) measurement.
- Inside and outside measurements can be directly read from the upper and lower slider graduations (Series 160).
- A fine-adjustment carriage type is available (Series 160).
- Parallax-free vernier scale type is available for easy and positive measurement (Series 160).
- With SPC output (Series 550).
- Supplied in fitted plastic case. Except 40"/ 1000mm supplied in wooden case.

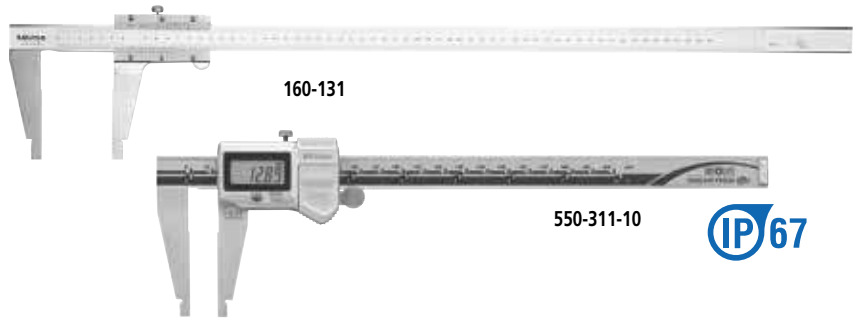

SPECIFICATIONS

Metric Digital model

Range*	Order No.	Accuracy	Resolution	Mass (g)	Remarks
0 (10) - 200mm	**550-301-10**	±0.03mm	0.01mm	180	IP67
0 (10) - 300mm	**550-331-10**	±0.03mm	0.01mm	380	w/ offset/preset function for easy ID measurement, IP67
0 (20) - 450mm	**550-203-10****	±0.05mm	0.01mm	1,110	
0 (20) - 600mm	**550-205-10****	±0.05mm	0.01mm	1,290	
0 (20) - 1000mm	**550-207-10****	±0.07mm	0.01mm	3,350	

*( ): Minimum dimension in ID measurement **Models are not IP67 rated

Inch/Metric Digital model

Range*	Order No.	Accuracy	Resolution	Mass (g)	Remarks
0 (.4") - 8" / 0 (10) - 200mm	**550-311-10**	±.001"	.0005" / 0.01mm	180	IP67
0 (.4") - 12" / 0 (10) - 300mm	**550-341-10**	±.0015"	.0005" / 0.01mm	380	w/ offset/preset function for easy ID measurement, IP67
0 (.5") - 18" / 0 (20) - 450mm	**550-223-10****	±.002"	.0005" / 0.01mm	1,110	—
0 (.5") - 24" / 0 (20) - 600mm	**550-225-10****	±.002"	.0005" / 0.01mm	1,290	—
0 (1") - 40" / 0 (20) - 1000mm	**550-227-10****	±.003"	.0005" / 0.01mm	3,350	—

*( ): Minimum dimension in ID measurement **Models are not IP67 rated

Metric with metric/metric dual scale

Range*	Order No.	Accuracy	Graduation	Mass (g)	Remarks
0 (20) - 450mm	**160-130**	±0.10mm	0.02mm	1,100	—
0 (20) - 600mm	**160-131**	±0.10mm	0.02mm	1,300	—
0 (20) - 1000mm	**160-132**	±0.15mm	0.02mm	3,350	—
0 (20) - 1500mm	**160-133**	±0.22mm	0.05mm	4,850	
0 (20) - 2000mm	**160-134**	±0.28mm	0.05mm	10,000	

*( ): Minimum dimension in ID measurement

DIMENSIONS

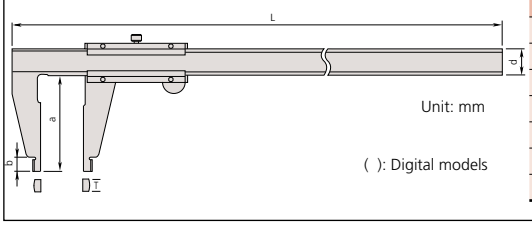

Range	L	a	b	d	T
0 - 8"/ 0 - 200mm	288 (290)	60	8	16	3
0 - 12" / 0 - 300mm	445	75	12	20	3.8
0 - 18" / 0 - 450mm	632	100	18	25	6
0 - 24" / 0 - 600mm	780	100	18	25	6
0 - 40" / 0 - 1000mm	1240	140	24	32	8
0 - 60" / 0 - 1500mm	1800	180	30	32	8
0 - 80" / 0 - 2000mm	2300	180	30	40	12

ABSOLUTE®
Absolute System Patented by MITUTOYO

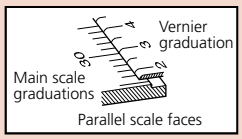

Technical Data

Accuracy: Refer to the list of specifications
Display*: LCD
Length standard*: ABSOLUTE electrostatic capacitance type linear encoder
Max. response speed*: Unlimited
Battery*: SR44 (1 pc.), **938882**
Battery life*: Approx. 3.5 years under normal use
*Digital models **Analog models

Function of Digital Model

Origin-set, Zero-setting, Data output,
inch/mm conversion (on inch/metric models only)
Alarm: Low voltage, Counting value composition error

Optional Accessories for Digital Model

959143: Data hold unit
959149: SPC cable with data switch (40" / 1m)
959150: SPC cable with data switch (80" / 2m)
05CZA624: SPC cable with data switch (40" / 1m) for IP67 model
05CZA625: SPC cable with data switch (80" / 2m) for IP67 model



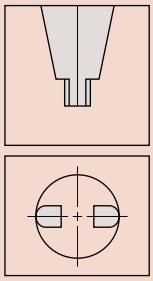

Round surface of jaws for accurate ID measurement.

Long-Jaw Vernier Caliper

SERIES 534

FEATURES

- Long jaws for measuring hard-to-reach features.
- Fine adjustment for more accurate measurement (except 534-109 and 534-110)
- Supplied in fitted wooden case.

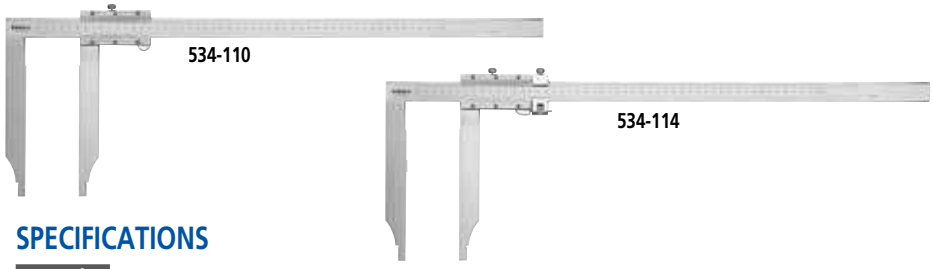

SPECIFICATIONS

Metric with metric/metric dual scale without fine adjustment

Range*	Order No.	Accuracy	Graduation		Mass (g)
			Lower Scale	Upper Scale	
0 (10) - 300mm	**534-109**	±0.07mm	0.05mm	0.05mm	400
0 (20) - 500mm	**534-110**	±0.13mm	0.05mm	0.05mm	1,400

*( ): Minimum dimension in ID measurement

Metric with metric/metric dual scale

Range*	Order No.	Accuracy	Graduation		Mass (g)
			Lower Scale	Upper Scale	
0 (10) - 300mm	**534-113**	±0.04mm	0.02mm	0.02mm	460
0 (20) - 500mm	**534-114**	±0.06mm	0.02mm	0.02mm	1,500
0 (20) - 750mm	**534-115**	±0.08mm	0.02mm	0.02mm	2,900
0 (20) - 1000mm	**534-116**	±0.10mm	0.02mm	0.02mm	3,500

*( ): Minimum dimension in ID measurement

Metric/Inch with metric/inch dual scale

Range*	Order No.	Accuracy	Graduation		Mass (g)
			Lower Scale	Upper Scale	
0 (10) - 300mm / 0 (.3") - 12"	**534-101**	±0.07mm	0.05mm	1/128"	460
0 (10) - 300mm / 0 (.3") - 12"	**534-105**	±0.04mm	0.02mm	.001"	460
0 (20) - 500mm / 0 (.8") - 20"	**534-102**	±0.13mm	0.05mm	1/128"	1,500
0 (20) - 500mm / 0 (.8") - 20"	**534-106**	±0.06mm	0.02mm	.001"	1,500
0 (20) - 700mm / 0 (.8") - 30"	**534-103**	±0.16mm	0.05mm	1/128"	2,900
0 (20) - 700mm / 0 (.8") - 30"	**534-107**	±0.08mm	0.02mm	.001"	2,900
0 (20) - 1000mm / 0 (.8") - 40"	**534-104**	±0.20mm	0.05mm	1/128"	3,500
0 (20) - 1000mm / 0 (.8") - 40"	**534-108**	±0.10mm	0.02mm	.001"	3,500

*( ): Minimum dimension in ID measurement

Inch with inch/inch dual scale

Range*	Order No.	Accuracy	Graduation		Mass (g)
			Lower Scale	Upper Scale	
0 (.3") - 12"	**534-117**	±.002"	.001"	.001"	400
0 (.8") - 20"	**534-118**	±.003"	.001"	.001"	1500
0 (.8") - 30"	**534-119**	±.004"	.001"	.001"	2900
0 (.8") - 40"	**534-120**	±.004"	.001"	.001"	3500

*( ): Minimum dimension in ID measurement

DIMENSIONS

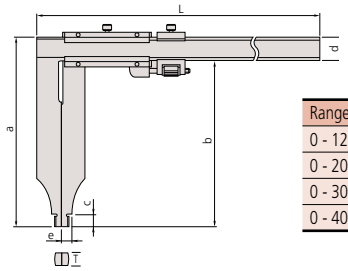

Unit: mm

Range	L	a	b	c	d	e	T
0 - 12" / 0 - 300mm	445	110	90	12	20	7	3.8
0 - 20" / 0 - 500mm	682	225	200	18.5	25	12	6
0 - 30" / 0 - 750mm	995	232	200	18.5	32	12	8
0 - 40" / 0 - 1000mm	1230	232	200	18.5	32	12	8

Technical Data

Accuracy: Refer to the list of specifications
Graduation: Refer to the list of specifications

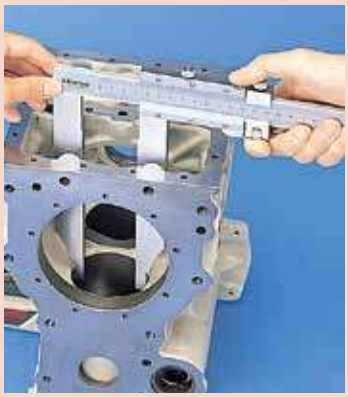

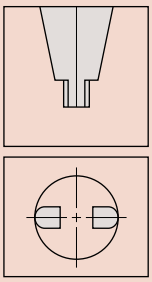

Round surface of jaws for accurate CD measurement.

ABSOLUTE Digimatic Caliper

SERIES 551 — with Nib Style and Standard Jaws

FEATURES

- The rounded faces of the jaws are ideal for accurate ID (inside diameter) measurement.
- With SPC output.
- Supplied in fitted plastic holster in carton. 18" / 450mm and larger supplied wooden case.

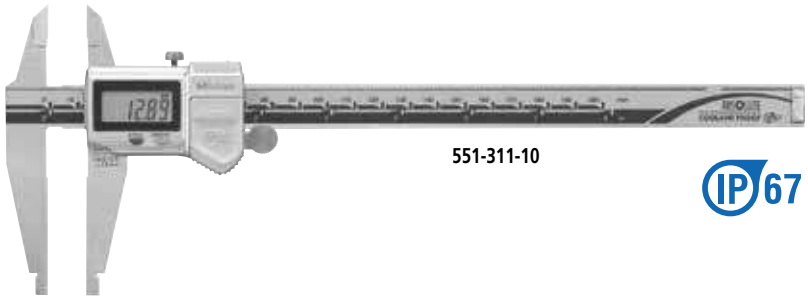

551-311-10

Technical Data

Accuracy: Refer to the list of specifications
Resolution: 0.01mm or .0005"/0.01mm
Display: LCD
Length standard: ABSOLUTE electrostatic capacitance type linear encoder
Max. response speed: Unlimited
Battery: SR44 (1 pc.), **938882**
Battery life: Approx. 3.5 years under normal use

Function of Digital Model

Origin-set, Zero-setting, Data output,
inch/mm conversion (on inch/metric models only)
Alarm: Low voltage, Counting value composition error

Optional Accessories for Digital Model

05CZA624: SPC cable with data switch (1m / 40") IP67
05CZA625: SPC cable with data switch (2m / 80") IP67

SPECIFICATIONS

Metric Digital model

Range*	Order No.	Accuracy	Resolution	Mass (g)	Remarks
0 (10) - 200mm	**551-301-10**	±0.03mm	0.01mm	180	IP67
0 (10) - 300mm	**551-331-10**	±0.04mm	0.01mm	380	with offset/preset function for easy ID measurement, IP67
0 (20) - 500mm	**551-204-10****	±0.06mm	0.01mm	1,060	—
0 (20) - 750mm	**551-206-10****	±0.06mm	0.01mm	1,410	—
0 (20) - 1000mm	**551-207-10****	±0.07mm	0.01mm	3,430	—

*( ): Minimum dimension in ID measurement ** Models are not IP67 rated

Inch/Metric Digital model

Range*	Order No.	Accuracy	Resolution	Mass (g)	Remarks
0 (.4") - 8" / 0 (10) - 200mm	**551-311-10**	±.001"	.0005" / 0.01mm	180	IP67
0 (.4") - 12" / 0 (10) - 300mm	**551-341-10**	±.002"	.0005" / 0.01mm	380	w/ offset/preset function for easy ID measurement, IP67
0 (.5") - 20" / 0 (20) - 500mm	**551-224-10****	±.0025"	.0005" / 0.01mm	1,060	—
0 (.5") - 30" / 0 (20) - 750mm	**551-226-10****	±.0025"	.0005" / 0.01mm	1,410	—
0 (1") - 40" / 0 (20) - 1000mm	**551-227-10****	±.003"	.0005" / 0.01mm	3,430	—

*( ): Minimum dimension in ID measurement ** Models are not IP67 rated



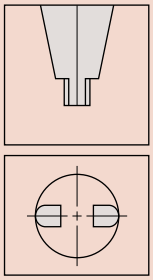

Round surface of jaws for accurate ID measurement.

DIMENSIONS

Series 551

Unit: mm

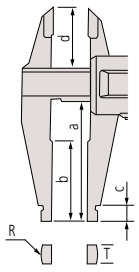

Range	a	b	c	d	R	T
0 - 8" / 0 - 200mm	60	43	8	30	5	3
0 - 12" / 0 - 300mm	90	68	10	40.1	5	3.8
0 - 20" / 0 - 500mm	150	115	15	56	10	6
0 - 30" / 0 - 750mm	150	115	15	56	10	8
0 - 40" / 0 - 1000mm	150	115	20	56	10	8

Digimatic Carbon-Fiber Caliper

SERIES 552 — with Optional Jaw Attachments

ABSOLUTE® Absolute System Patented by MITUTOYO

SPC

IP66

FEATURES

- Lightweight Digimatic Calipers employ CFRP (Carbon-Fiber Reinforced Plastics) in the beam and jaws.
- Highly durable and easy to handle.
- The range of applications can be expanded by using the optional attachments.
- Direct readout of ID measurements from the LCD. (Offset value can be set easily by pressing the Offset key.)
- Preset function for setting a desired starting point.
- With SPC data output.
- Special model available with ceramic jaws which are suitable for measuring abrasive and magnetic products.
- Supplied in fitted wooden case.

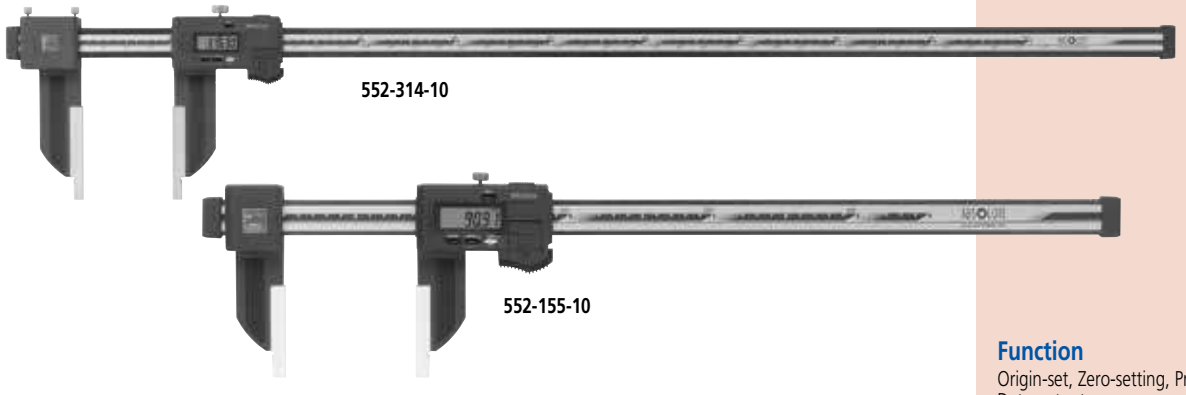

552-314-10

552-155-10

Technical Data

Accuracy: Refer to the list of specifications
Resolution: .0005"/0.01mm or 0.01mm
Display: LCD
Length standard: Electrostatic capacitance type linear encoder
Max. response speed: unlimited
Battery: SR44 (1 pc.), **938882**
Battery life: Approx. 3,000 hours in continuous use

Function

Origin-set, Zero-setting, Presetting, Offsetting, Data hold, Data output,
inch/mm conversion (on inch/metric models only)
Alarm: Low voltage, Counting value composition error

SPECIFICATIONS

Metric

Range*	Order No.	Accuracy	Resolution	Remarks
0(20)-450mm	**552-302-10**	+/-0.04mm	0.01mm	
0(20)-450mm	**552-150-10**	+/-0.06mm	0.01mm	long jaws 200mm
0(20)-450mm	**552-155-10**	+/-0.04mm	0.01mm	ceramic jaws
0(20)-600mm	**552-303-10**	+/-0.04mm	0.01mm	
0(20)-600mm	**552-151-10**	+/-0.06mm	0.01mm	long jaws 200mm
0(20)-600mm	**552-156-10**	+/-0.04mm	0.01mm	ceramic jaws
0(20)-1000mm	**552-304-10**	+/-0.05mm	0.01mm	
0(20)-1000mm	**552-152-10**	+/-0.07mm	0.01mm	long jaws 200mm
0(20)-1500mm	**552-305-10**	+/-0.09mm	0.01mm	
0(20)-1500mm	**552-153-10**	+/-0.11mm	0.01mm	long jaws 200mm
0(20)-2000mm	**552-306-10**	+/-0.12mm	0.01mm	
0(20)-2000mm	**552-154-10**	+/-0.14mm	0.01mm	long jaws 200mm

*( ): Minimum dimension in ID measurement

Inch/Metric

Range*	Order No.	Accuracy	Resolution	Remarks
0(.5")-18"	**552-312-10**	+/-.002"	.0005"/0.01mm	
0(.5")-18"	**552-160-10**	+/-.0025"	.0005"/0.01mm	long jaws 7.9"
0(.5")-18"	**552-165-10**	+/-.002"	.0005"/0.01mm	ceramic jaws
0(.5")-24"	**552-313-10**	+/-.002"	.0005"/0.01mm	
0(.5")-24"	**552-161-10**	+/-.0025"	.0005"/0.01mm	long jaws 7.9"
0(.5")-24"	**552-166-10**	+/-.002"	.0005"/0.01mm	ceramic jaws
0(1")-40"	**552-314-10**	+/-.002"	.0005"/0.01mm	
0(1")-40"	**552-162-10**	+/-.003"	.0005"/0.01mm	long jaws 7.9"
0(1")-60"	**552-315-10**	+/-.004"	.0005"/0.01mm	
0(1")-60"	**552-163-10**	+/-.0045"	.0005"/0.01mm	long jaws 7.9"
0(1")-80"	**552-316-10**	+/-.005"	.0005"/0.01mm	
0(1")-80"	**552-164-10**	+/-.0055"	.0005"/0.01mm	long jaws 7.9"

*( ): Minimum dimension in ID measurement

Optional Accessories

05CZA624: SPC cable with data switch (40"/ 1m)
05CZA625: SPC cable with data switch (80"/ 2m)

914055:* Centerline attachments (mm)
914056:* Centerline attachments (inch)
914057:* Pointed ID measuring attachments (mm)
914058:* Pointed ID measuring attachments (inch)
914053:** Attachment clamps (for models up to 24" / 600mm range)
914054:** Attachment clamps (for models over 24" / 600mm range)

*Attachment clamps are required
**Attachment clamps and attachments are not available for long jaw type calipers



Centerline Attachments



Pointed ID Measuring Attachments



Attachment Clamps

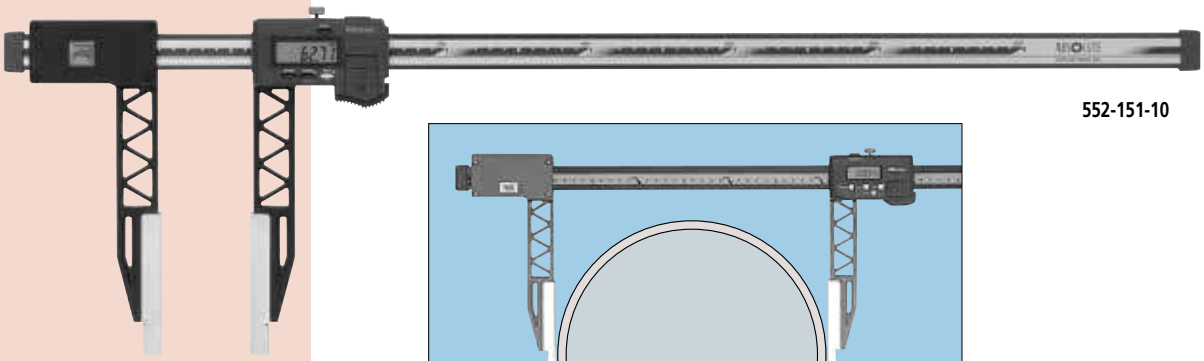

552-151-10



Ceramic jaws



Centerline attachments



ID point attachments

DIMENSIONS AND MASS

Unit: mm

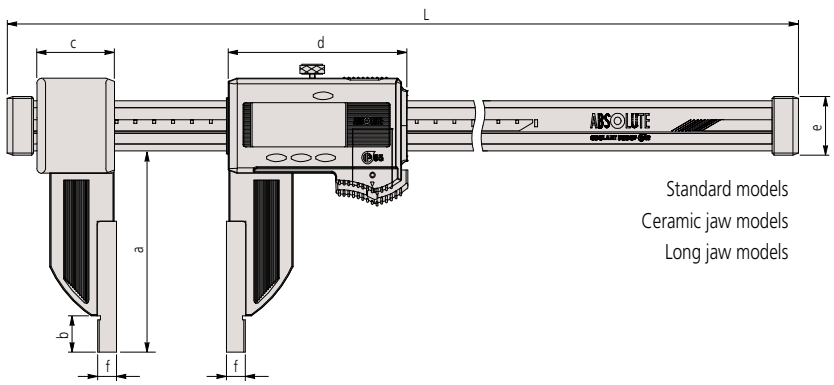

Standard models
Ceramic jaw models
Long jaw models

Standard models, Ceramic jaw models

Range	L	a	b	c	d	e	f	Mass (g)
0 - 18" / 0 - 450mm	640	100	18	41.2	91.8	25	10 (.25")	715
0 - 24" /0 - 600mm	790	100	18	41.2	91.8	25	10 (.25")	790
0 - 40" / 0 - 1000mm	1230	150	24	62.8	113.8	32	10 (.5")	1,760
0 - 60" / 0 - 1500mm	1740	150	24	62.8	113.8	32	10 (.5")	2,160
0 - 80" / 0 - 2000mm	2250	150	24	62.8	113.8	32	10 (.5")	2,560

( ): inch/mm models

Pointed ID Measuring Attachments

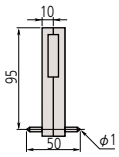

Unit: mm

Long jaw models

Range	L	a	b	c	d	e	f	Mass (g)
0 - 18" / 0 - 450mm	680	200	24	89	91.8	25	10 (.25")	1,215
0 - 24" / 0 - 600mm	830	200	24	89	91.8	25	10 (.25")	1,290
0 - 40" / 0 - 1000mm	1280	200	24	110	113.8	32	10 (.5")	2,090
0 - 60" / 0 - 1500mm	1790	200	24	110	113.8	32	10 (.5")	2,490
0 - 80" / 0 - 2000mm	2300	200	24	110	113.8	32	10 (.5")	2,890

( ): inch/mm models

Centerline Attachments

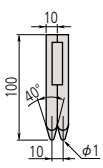

Mitutoyo

ABSOLUTE Coolant-Proof Carbon-Fiber Caliper

SERIES 552 — with Interchangeable Jaws

FEATURES

- The range of applications can be expanded by using interchangeable jaws (optional).
- Quick and easy change of jaws due to the unique clamping mechanism. (A pair of clamping wheels is a standard accessory.)
- Provided with preset function for setting a desired starting point, which allows direct readout of offset measurements.
- SPC data output.

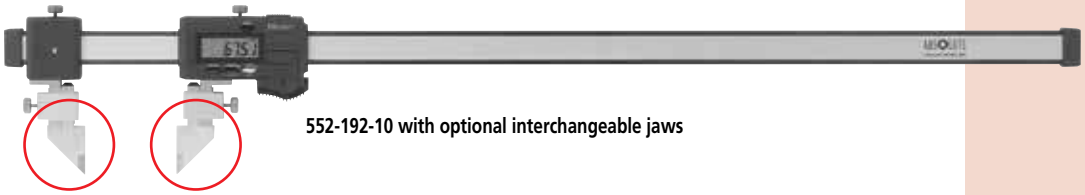

552-192-10 with optional interchangeable jaws

SPECIFICATIONS

Inch/Metric

Range	Order No.	Accuracy	Mass(g)
0 - 18" / 0 - 450mm	**552-191-10**	±.002"	650
0 - 24" / 0 - 600mm	**552-192-10**	±.002"	725
0 - 40" / 0 - 1000mm	**552-193-10**	±.002"	1480
0 - 60" / 0 - 1500mm	**552-194-10**	±.004"	1880
0 - 80" / 0 - 2000mm	**552-195-10**	±.005"	2280

Interchangeable Jaws (Optional)

Standard type

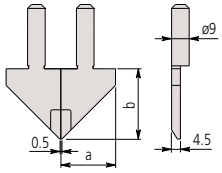

Inside point type

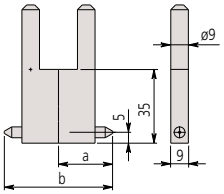

Surface Plate Type

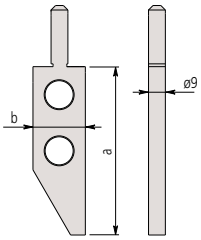

Scriber Type

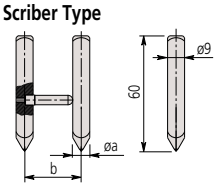

Centerline Type

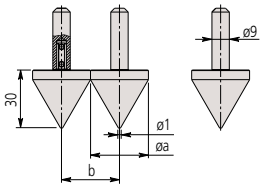

Unit: mm

Standard Type

Order No.	Components	a	b
07CZA056	Right (**07CAA044**), Left (**07CAA045**)	28mm (1.1")	30mm (1.2")

Inside Point Type

Order No.	Components	a	b
07CZA058	**07CZA041** x 2pcs.	25mm	50mm
07CZA059	**07CZA048** x 2pcs.	1"	2"

Scriber Type

Order No.	Components	a	b
07CZA055	Right (**07CZA042**), Left (**07CZA043**)	8mm	30mm
07CZA061	Right (**07CZA042**), Left (**07CZA049**)	031"	1.2"

Surface Plate Type

Order No.	a	b
07CZA044	3.5" / 90mm	1.1" / 28mm

Centerline Type

Order No.	Components	a	b
07CZA057	**07CZA039** x 2pcs.	30mm	30mm
07CZA060	**07CZA047** x 2pcs.	1.2"	1.2"

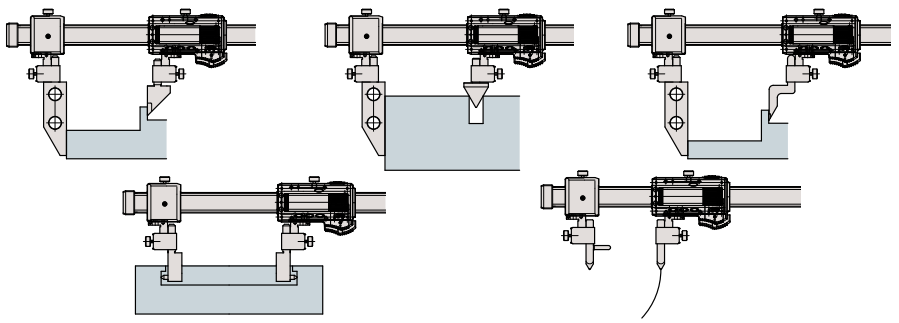

Technical Data

Accuracy: Refer to the list of specifications
Resolution: .0005"/0.01mm
Display: LCD
Scale type: ABSOLUTE electromagnetic linear encoder
Max. response speed: Unlimited
Battery: SR44 (1 pc.), **938882**
Battery life: Approx. 5,000 hours in continuous use
Dust/Water protection level: IP66
Standard accessory: Jaw clamps (2 pcs.), **05GZA033**

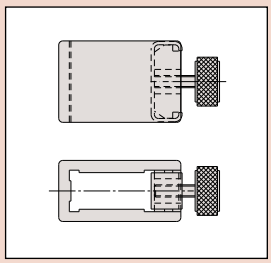

Functions

Origin-set, Zero-setting, Presetting, Offsetting, Data hold, Automatic power on/off, Data output, inch/mm conversion (inch/mm models)
Alarm: Low voltage, Counting value composition error

Optional Accessories

05CZA624: SPC cable with data switch (40" / 1m)
05CZA625: SPC cable with data switch (80" / 2m)

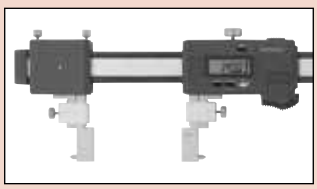

ABSOLUTE Back-Jaw Centerline Caliper

SERIES 573 — Center-to-Center & Edge-to-Center Types

SPC

ABSOLUTE®
Absolute System Patented by MITUTOYO

FEATURES

- Specially designed to measure the distance between two centers or the distance from an edge to center.
- Provided with jaws on the back of the slider, measurements can be read easily by upside down.
- Direct reading of pitch measurements is available due to the offset value setting function.
- With SPC data output.
- Supplied fitted in wooden case.

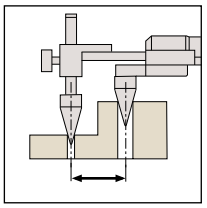

573-117-10
(Center-to-center type)

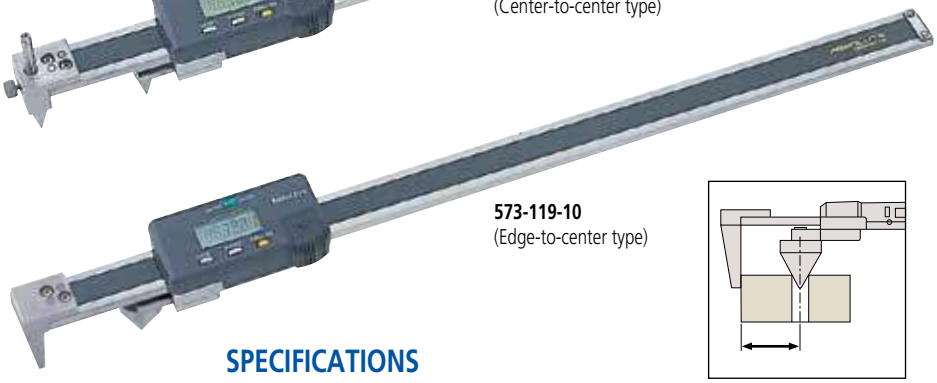

573-119-10
(Edge-to-center type)

Technical Data

Accuracy: Refer to the list of specifications
Resolution: 0.01mm
Display: LCD
Length standard*: ABSOLUTE electrostatic capacitance type linear encoder
Max. response speed: Unlimited
Battery: SR44 (1 pc.), **938882**
Battery life: Approx. 3.5 years under normal use

Function

Origin-set, Zero-setting, Power On/Off, Data output
Alarm: Low voltage, Counting value composition error

Optional Accessories

959143: Data hold unit
959149: SPC cable with data switch (1m)
959150: SPC cable with data switch (2m)

SPECIFICATIONS

Metric Center-to-center distance type

Range	Order No.	Accuracy	Resolution	Mass (g)
10 - 200mm	**573-116-10**	±0.10mm	0.01mm	482
10 - 300mm	**573-117-10**	±0.15mm	0.01mm	578

Metric Edge-to-center distance type

Range	Order No.	Accuracy	Resolution	Mass (g)
10 - 200mm	**573-118-10**	±0.10mm	0.01mm	485
10 - 300mm	**573-119-10**	±0.15mm	0.01mm	581

DIMENSIONS

Unit: mm

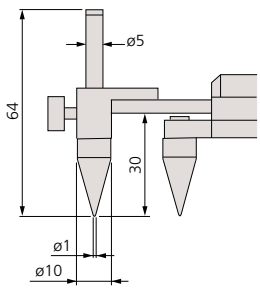

573-116-10 / 573-117-10

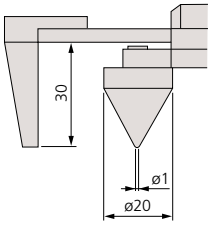

573-118-10 / 573-119-10

Mitutoyo

Offset Caliper

SERIES 573, 536 — ABSOLUTE Digimatic and Vernier Type

FEATURES

- Main scale jaw can slide up and down to facilitate measurement of stepped sections. (Hard-to-reach dimensions such as A, B, C can be accurately measured.)
- With depth bar.
- With SPC data output. (Series 573)
- Supplied in fitted plastic case.

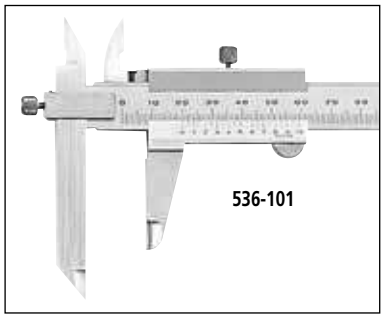



SPECIFICATIONS

Metric Digital model

Range	Order No.	Accuracy	Resolution	Mass (g)
0 - 150mm	**573-601**	±0.02mm	0.01mm	168
0 - 200mm	**573-602**	±0.02mm	0.01mm	198
0 - 300mm	**573-604**	±0.03mm	0.01mm	350

Metric

Range	Order No.	Accuracy	Graduation	Mass (g)
0 - 150mm	**536-101**	±0.05mm	0.05mm	150
0 - 200mm	**536-102**	±0.05mm	0.05mm	200
0 - 300mm	**536-103**	±0.08mm	0.05mm	400

Inch/Metric Digital model

Range	Order No.	Accuracy	Resolution	Mass (g)
0 - 6" / 0 - 150mm	**573-701**	±.001"	.0005" / 0.01mm	168
0 - 8" / 0 - 200mm	**573-702**	±.001"	.0005" / 0.01mm	198
0 - 12" / 0 - 300mm	**573-704**	±.0015"	.0005" / 0.01mm	350

DIMENSIONS

Unit: mm

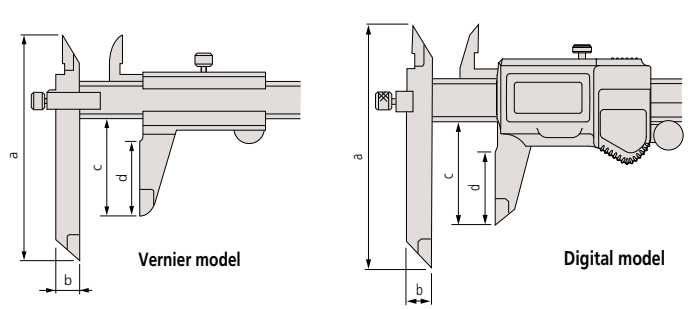

Range	a	b	c	d
0 - 6" / 0 - 150mm	95	10	40	30.4 (30)
0 - 8" / 0 - 200mm	95	10	50	40.4 (38.5)
0 - 12" / 0 - 300mm	135	15	64	51

( ) Digital Model

TÜVRheinland CERTIFIED www.tuv.com ID 201120740

IP67

SPC

ABSOLUTE® Absolute System Patented by MITUTOYO

Technical Data

Accuracy: Refer to the list of specifications
Resolution*: .0005"/0.01mm or 0.01mm
Graduation**: 0.05mm
Display*: LCD
Length standard*: ABSOLUTE electrostatic capacitance type linear encoder
Max. response speed*: Unlimited
Battery*: SR44 (1 pc.), **938882**
Battery life*: Approx. 3.5 years under normal use
*Digital models **Analog models

Function of Digital Model

Origin-set, Zero-setting, Power On/Off, Data output, inch/mm conversion (on inch/metric models only)
Alarm: Low voltage, Counting value composition error

Optional Accessories for Digital Model

05CZA624: SPC cable with data switch (40" / 1m)
05CZA625: SPC cable with data switch (80" / 2m)



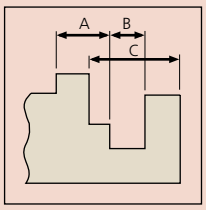

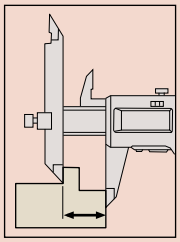

Offset Centerline Caliper

SERIES 573, 536 — ABSOLUTE Digimatic and Vernier Type

FEATURES

- Specially designed for center to center distance measurements on the same and offset planes.
- Can also measure from edge to center.
- Hole diameter should be in the range of 1.5mm - 10mm (.06" - .4").
- With SPC data output. (Series 573)
- Supplied in fitted plastic case.



573-605



536-105

Technical Data

Accuracy: Refer to the list of specifications
Resolution*: .0005"/0.01mm or 0.01mm
Graduation**: 0.05mm
Display*: LCD
Length standard*: ABSOLUTE electrostatic capacitance type linear encoder
Max. response speed*: Unlimited
Battery*: SR44 (1 pc.), **938882**
Battery life*: Approx. 3.5 years under normal use
*Digital models **Analog models

Function of Digital Model

Origin-set, Zero-setting, Power On/Off, Data output, inch/mm conversion (on inch/metric models only)
Alarm: Low voltage, Counting value composition error

Optional Accessories for Digital Model

05CZA624: SPC cable with data switch (40" / 1m)
05CZA625: SPC cable with data switch (80" / 2m)



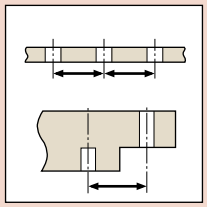

SPECIFICATIONS

Metric Digital model

Range	Order No.	Accuracy	Resolution	Mass (g)
10 - 150mm	**573-605**	±0.03mm	0.01mm	157
10 - 200mm	**573-606**	±0.03mm	0.01mm	177
10 - 300mm	**573-608**	±0.04mm	0.01mm	320

Inch/Metric Digital model

Range	Order No.	Accuracy	Resolution	Mass (g)
.4 - 6" / 10 - 150mm	**573-705**	±.0015"	.0005" / 0.01mm	157
.4 - 8" / 10 - 200mm	**573-706**	±.0015"	.0005" / 0.01mm	177
.4 - 12" / 10 - 300mm	**573-708**	±.0015"	.0005" / 0.01mm	320

Metric

Range	Order No.	Accuracy	Graduation	Mass (g)
10 - 150mm	**536-105**	±0.05mm	0.05mm	140
10 - 200mm	**536-106**	±0.05mm	0.05mm	160
10 - 300mm	**536-107**	±0.08mm	0.05mm	320

DIMENSIONS

Unit: mm

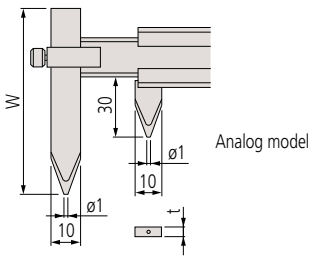

Analog model

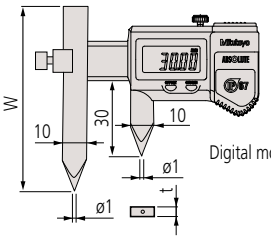

Digital model

Range	W	t
10 - 150mm	75	3
10 - 200mm	75	3
10 - 300mm	100	3.8

Range	W	t
10 - 160mm/.4 - 6.4"	75	3.5
10 - 210mm/.4 - 8.4"	75	3.5
10 - 310mm/.4 - 12.4"	100	3.8

Point Caliper

SERIES 573, 536 — ABSOLUTE Digimatic and Vernier Type

FEATURES

- Narrow tip jaws fit into very small grooves and tracks, making many previously difficult outside measurements far easier to obtain.
- With depth bar.
- With SPC data output. (Series 573)
- Supplied in fitted plastic case.



573-721



536-121

SPECIFICATIONS

Metric Digital model

Range	Order No.	Accuracy	Resolution	Mass (g)
0 - 150mm	**573-621**	±0.02mm	0.01mm	163
0 - 150mm	**573-625**	±0.02mm	0.01mm	163

Inch/Metric Digital model

Range	Order No.	Accuracy	Resolution	Mass (g)
0 - 6" / 0 - 150mm	**573-721**	±.001"	.0005" / 0.01mm	163
0 - 6" / 0 - 150mm	**573-725**	±.001"	.0005" / 0.01mm	163

Metric

Range	Order No.	Accuracy	Graduation	Mass (g)
0 - 150mm	**536-121**	±0.05mm	0.05mm	150

DIMENSIONS

Unit: mm

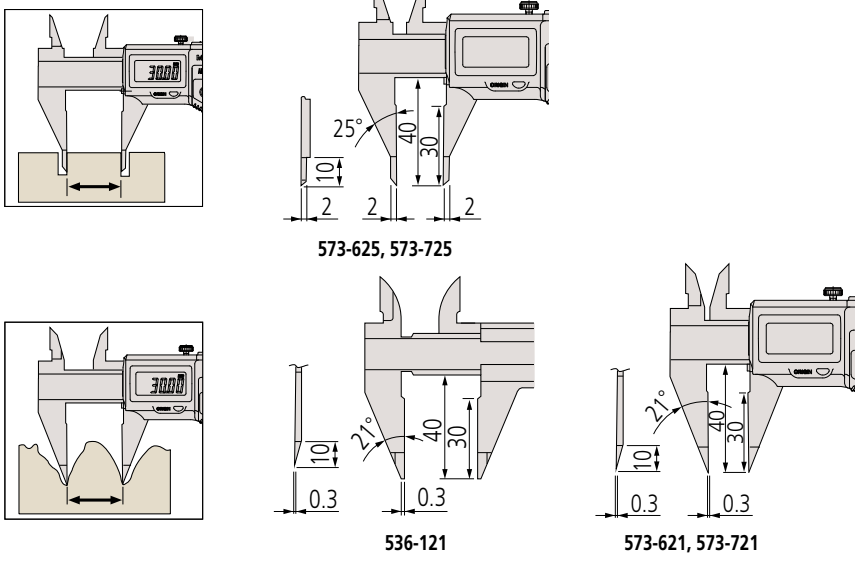

Technical Data

Accuracy: Refer to the list of specifications
Resolution*: .0005"/0.01mm or 0.01mm
Graduation**: 0.05mm
Display*: LCD
Length standard*: ABSOLUTE electrostatic capacitance type linear encoder
Max. response speed*: Unlimited
Battery*: SR44 (1 pc.), **938882**
Battery life*: Approx. 3.5 years under normal use
*Digital models **Analog models

Function of Digital Model

Origin-set, Zero-setting, Power On/Off, Data output, inch/mm conversion (on inch/metric models only)
Alarm: Low voltage, Counting value composition error

Optional Accessories for Digital Model

05CZA624: SPC cable with data switch (40" / 1m)
05CZA625: SPC cable with data switch (80" / 2m)



Blade-Type Caliper

SERIES 573, 536 — ABSOLUTE Digimatic and Vernier Type

FEATURES

- The thin-blade type jaws fit into very small grooves and making previously difficult. outside measurements easier to obtain.
- The OD measuring faces are carbide-tipped.
- With depth bar.
- With SPC data output. (Series 573)
- Supplied in fitted plastic case.

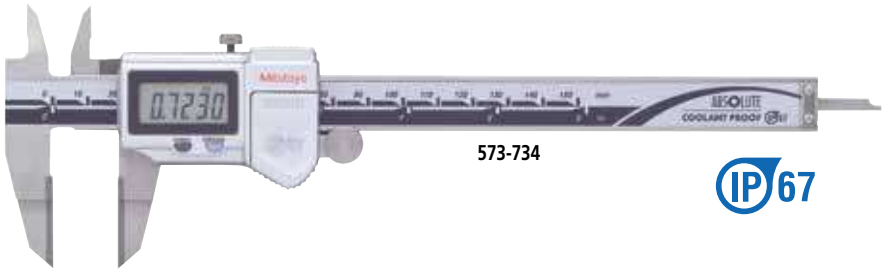

573-734

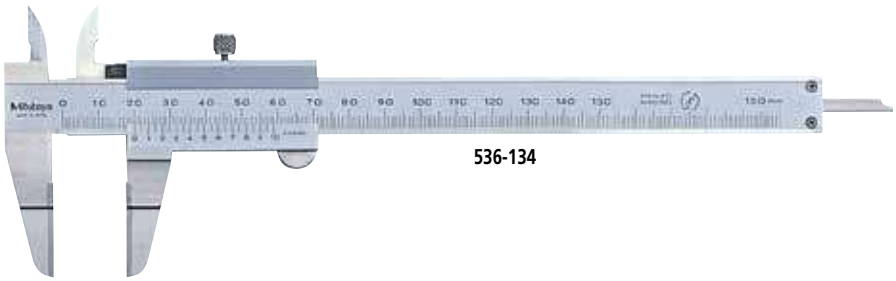

536-134

Technical Data

Accuracy: Refer to the list of specifications
Resolution*: .0005"/0.01mm or 0.01mm
Graduation**: 0.05mm
Display*: LCD
Length standard*: ABSOLUTE electrostatic capacitance type linear encoder
Max. response speed*: Unlimited
Battery*: SR44 (1 pc.), **938882**
Battery life*: Approx. 3.5 years under normal use
*Digital models **Analog models

Function of Digital Model

Origin-set, Zero-setting, Power On/Off, Data output, inch/mm conversion (on inch/metric models only)
Alarm: Low voltage, Counting value composition error

Optional Accessories for Digital Model

05CZA624: SPC cable with data switch (40" / 1m)
05CZA625: SPC cable with data switch (80" / 2m)



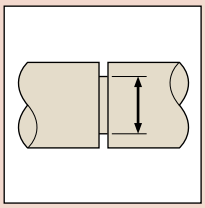

SPECIFICATIONS

Metric Digital model

Range	Order No.	Accuracy	Resolution	Mass (g)
0 - 150mm	**573-634**	±0.02mm	0.01mm	168

Inch/Metric Digital model

Range	Order No.	Accuracy	Resolution	Mass (g)
0 - 6" / 0 - 150mm	**573-734**	±.001"	.0005" / 0.01mm	168

Metric

Range	Order No.	Accuracy	Graduation	Mass (g)
0 - 150mm	**536-134**	±0.05mm	0.05mm	130
0 - 200mm	**536-135**	±0.05mm	0.05mm	160
0 - 300mm	**536-136**	±0.08mm	0.05mm	340

DIMENSIONS

Unit: mm

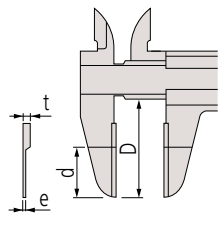

Anlog model

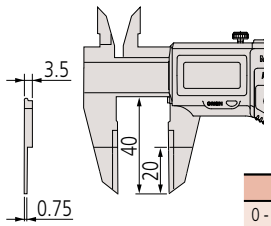

Digital model

Range	D	d	e	t
0 - 6" / 0 - 150mm	40	20	0.75	3
0 - 200mm	50	25	0.75	3
0 - 300mm	64	30	1	3.8

Neck Caliper

SERIES 573, 536 — ABSOLUTE Digimatic and Vernier Type

FEATURES

- Point-jaw type can measure wall thickness inside bores and recesses.
- Flat-jaw type can measure grooves and recesses.
- With SPC data output. (Series 573)
- Supplied in fitted plastic case.

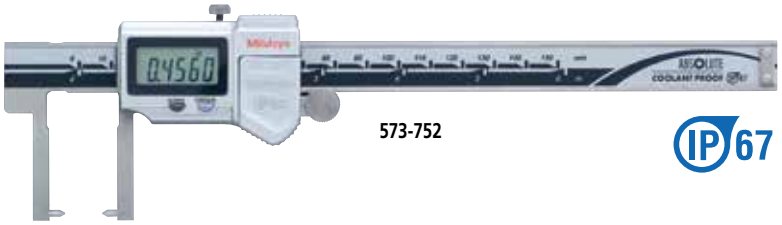

573-752

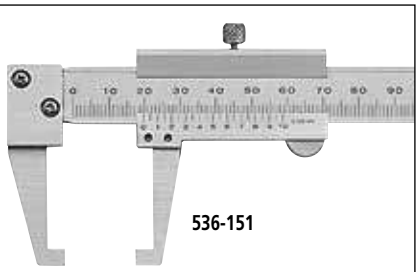

536-151

Point jaw type

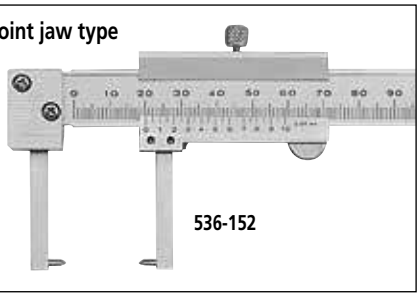

536-152

SPECIFICATIONS

Metric Digital model

Range	Order No.	Accuracy	Resolution	Mass (g)
0 - 150mm	**573-651**	±0.03mm	0.01mm	157
0 - 150mm	**573-652***	±0.03mm	0.01mm	157

*Point jaw type

Inch/Metric Digital model

Range	Order No.	Accuracy	Resolution	Mass (g)
0 - 6" / 0 - 150mm	**573-751**	±.0015"	.0005" / 0.01mm	157
0 - 6" / 0 - 150mm	**573-752***	±.0015"	.0005" / 0.01mm	157

*Point jaw type

Metric

Range	Order No.	Accuracy	Graduation	Mass (g)
0 - 150mm	**536-151**	±0.05mm	0.05mm	140
0 - 150mm	**536-152***	±0.05mm	0.05mm	140

*Point jaw type

DIMENSIONS

Unit: mm

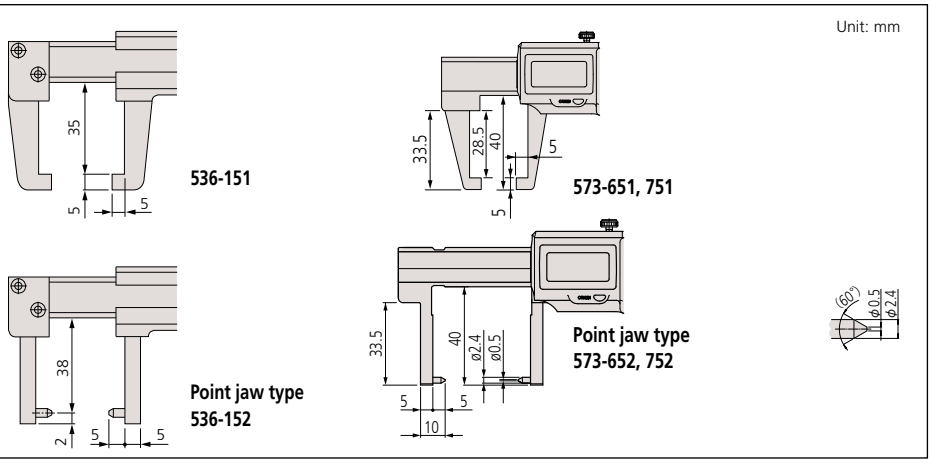

Technical Data

Accuracy: Refer to the list of specifications
Resolution*: 0.01mm or .0005"/0.01mm
Graduation**: 0.05mm
Display*: LCD
Length standard*: ABSOLUTE electrostatic capacitance type linear encoder
Max. response speed*: Unlimited
Battery*: SR44 (1 pc.), **938882**
Battery life*: Approx. 3.5 years under normal use
*Digital models **Analog models

Function of Digital Model

Origin-set, Zero-setting, Power On/Off, Data output, inch/mm conversion (on inch/metric models only)
Alarm: Low voltage, Counting value composition error

Optional Accessories for Digital Model

05CZA624: SPC cable with data switch (1m / 40")
05CZA625: SPC cable with data switch (2m / 80")



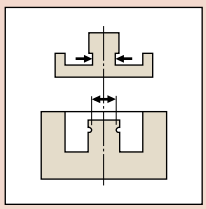

Tube Thickness Caliper

SERIES 573, 536 — ABSOLUTE Digimatic and Vernier Type

FEATURES

- The main scale jaw is a round bar that facilitates measurements of tube wall thickness.
- With SPC data output. (Series 573)
- Supplied in fitted plastic case.

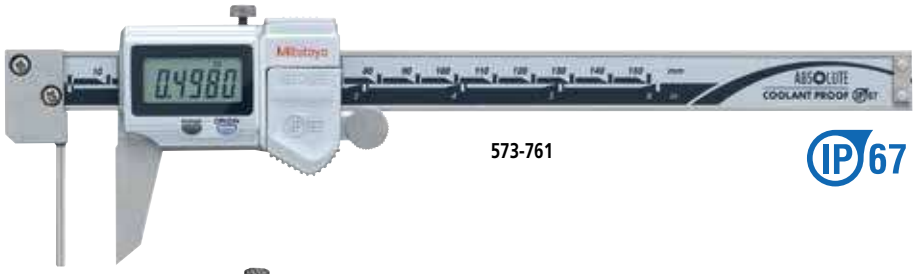

573-761

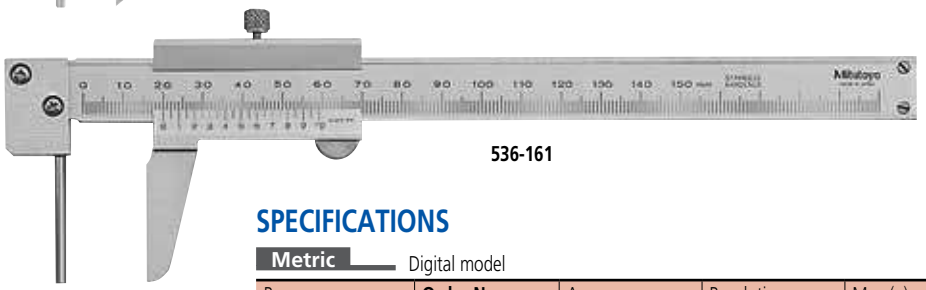

536-161

Technical Data

Accuracy: Refer to the list of specifications
Display*: LCD
Length standard: ABSOLUTE electrostatic capacitance type linear encoder
Max. response speed*: Unlimited
Battery*: SR44 (1 pc.), **938882**
Battery life*: Approx. 3.5 years under normal use
*Digital models **Analog models

Function of Digital Model

Origin-set, Zero-setting, Power On/Off, Data output, inch/mm conversion (on inch/metric models only))
Alarm: Low voltage, Counting value composition error

Optional Accessories for Digital Model

05CZA624: SPC cable with data switch (40" / 1m)
05CZA625: SPC cable with data switch (80" / 2m)

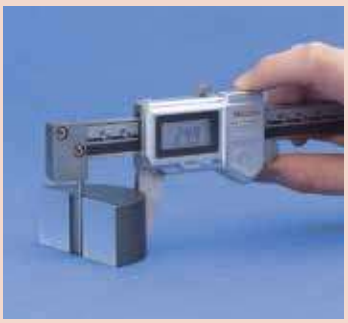

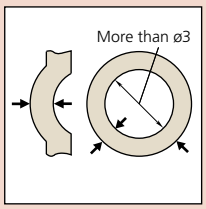

SPECIFICATIONS

Metric Digital model

Range	Order No.	Accuracy	Resolution	Mass(g)
0 - 150mm	**573-661**	±0.05mm	0.01mm	167

Inch/Metric Digital model

Range	Order No.	Accuracy	Resolution	Mass(g)
0 - 6" / 0 - 150mm	**573-761**	±.002"	.0005" / 0.01mm	167

Metric

Range	Order No.	Accuracy	Graduation	Mass(g)
0 - 150mm	**536-161**	±0.05mm	0.05mm	150

DIMENSIONS AND MASS

Unit: mm

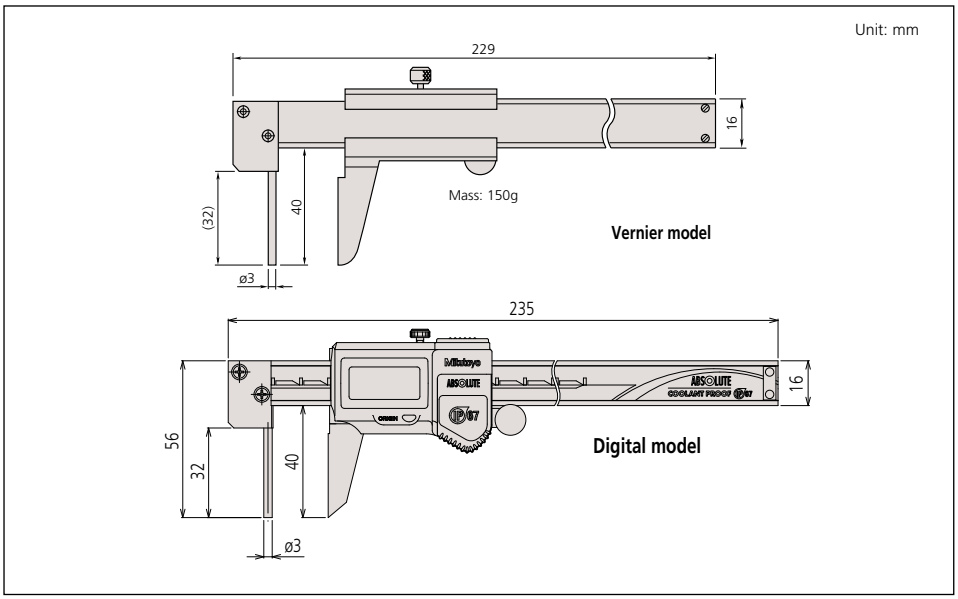

ABSOLUTE Low-Force Caliper

SERIES 573

FEATURES

- Due to their low measuring force, these calipers are ideal for elastic or resilient workpieces such as plastic parts and rubber parts that standard calipers cannot measure.
- With SPC data output.
- Supplied in fitted plastic case.

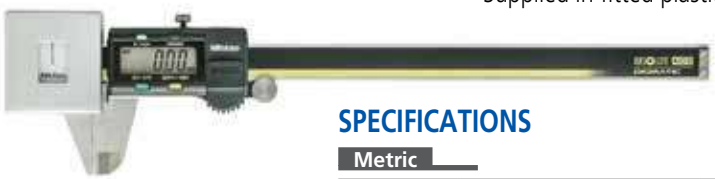

573-191-30

SPECIFICATIONS

Metric

Range	Order No.	Accuracy	Resolution	Mass (g)
0 - 180mm	**573-191-30**	±0.05mm	0.01mm	253

Inch/Metric

Range	Order No.	Accuracy	Resolution	Mass (g)
0 - 7" / 0 - 180mm	**573-291-30**	±.002"	.0005" / 0.01mm	253

DIMENSIONS AND MASS

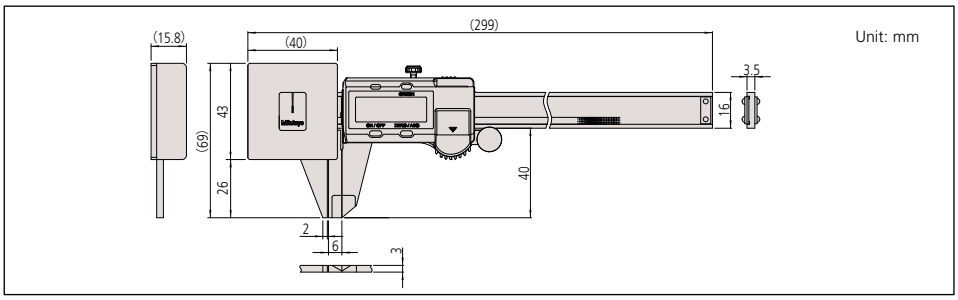

Technical Data

Accuracy: Refer to the list of specifications
Resolution: .0005"/0.01mm or 0.01mm
Display: LCD
Length standard: ABSOLUTE Electromagnetic Induction-type Linear Encoder
Measuring force: 0.49N to 0.98N (50gf to 100gf)
Jaw retraction: 0.3mm
Max. response speed: Unlimited
Battery: SR44 (1 pc.), **938882**
Battery life: Approx. 3.5 years under normal use

Function

Origin-set, Zero-setting, Power On/Off, Data output, inch/mm conversion (on inch/metric models only)
Alarm: Low voltage, Counting value composition error

Optional Accessories

959143: Data hold unit
959149: SPC cable with data switch (40" / 1m)
959150: SPC cable with data switch (80" / 2m)



Measurement procedures



A consistently low measuring force can be guaranteed by only taking measurements when the pointer is between the two fiducial lines.

ABSOLUTE Snap Caliper

SERIES 573

FEATURES

- The ABSOLUTE Digimatic snap caliper features a spring-loaded mechanism to allow quick and efficient go/no-go inspection for mass production parts.
- With SPC data output.
- Supplied in fitted plastic case.

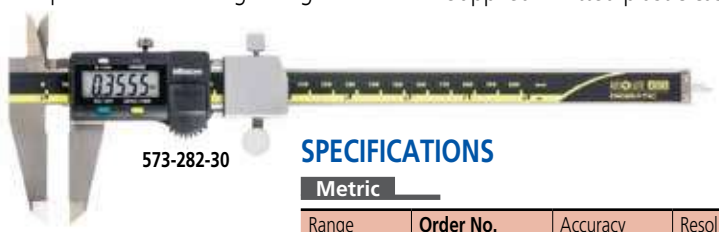

573-282-30

SPECIFICATIONS

Metric

Range	Order No.	Accuracy	Resolution	Mass (g)
0 - 100mm	**573-181-30**	±0.02mm	0.01mm	213
0 - 150mm	**573-182-30**	±0.02mm	0.01mm	233

Inch/Metric

Range	Order No.	Accuracy	Resolution	Mass (g)
0 - 4" / 0 - 100mm	**573-281-30**	±.001"	.0005" / 0.01mm	213
0 - 6" / 0 - 150mm	**573-282-30**	±.001"	.0005" / 0.01mm	233

DIMENSIONS AND MASS

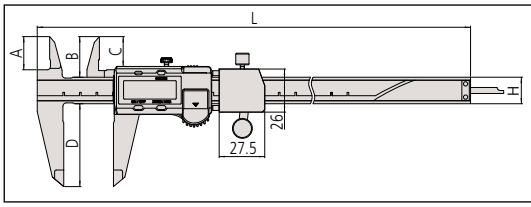

Unit: mm

Range	L	a	b	c	d	Mass (g)
0 - 100mm	233	40	21	16.5	16	213
0 - 150mm	290	50	24.5	20	16	233

Technical Data

Accuracy: Refer to the list of specifications
Resolution: .0005"/0.01mm or 0.01mm
Repeatability: .0005" / 0.01mm
Display: LCD
Length standard: ABSOLUTE Electromagnetic Induction-type Linear Encoder
Measuring force: 7N to 14N (700gf to 1400gf)
Jaw retraction: 2mm
Max. response speed: Unlimited
Battery: SR44 (1 pc.), **938882**
Battery life: Approx. 3.5 years under normal use

Function

Origin-set, Zero-setting, Power On/Off, Data output, inch/mm conversion (on inch/metric models only)
Alarm: Low voltage, Counting value composition error

Optional Accessories

959143: Data hold unit
959149: SPC cable with data switch (40" / 1m)
959150: SPC cable with data switch (80" / 2m)

Scribing Caliper

SERIES 573, 536 — ABSOLUTE Digimatic and Vernier Type

FEATURES

- The carbide-tipped jaws facilitate fine scribing on workpiece.
- With depth bar.
- With SPC data output. (Series 573)
- Supplied in fitted plastic case.

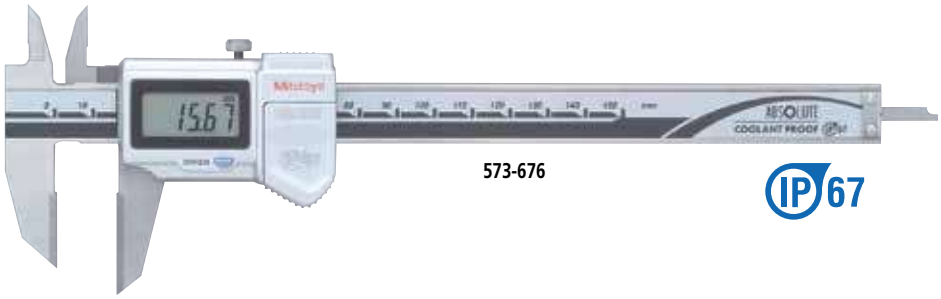

Technical Data

Accuracy: Refer to the list of specifications
Display: LCD
Length standard: ABSOLUTE electrostatic capacitance type linear encoder
Max. response speed: Unlimited
Battery: SR44 (1 pc.), **938882**
Battery life: Approx. 3.5 years under normal use

Function

Origin-set, Zero-setting, Power On/Off, Data output, inch/mm conversion (on inch/metric models only)
Alarm: Low voltage, Counting value composition error

Optional Accessories

05CZA624: SPC cable with data switch (40" / 1m)
05CZA625: SPC cable with data switch (80" / 2m)

SPECIFICATIONS

Metric Digital model

Range	Order No.	Accuracy	Resolution	Mass (g)
0 - 150mm	**573-676**	±0.02mm	0.01mm	166
0 - 200mm	**573-677**	±0.02mm	0.01mm	196
0 - 300mm	**573-679**	±0.03mm	0.01mm	345

Metric Vernier type

Range	Order No.	Accuracy	Graduation	Mass (g)
0 - 150mm	**536-221**	±0.05mm	0.05mm	150
0 - 200mm	**536-222**	±0.05mm	0.05mm	180
0 - 300mm	**536-223**	±0.08mm	0.05mm	355

DIMENSIONS

Unit: mm

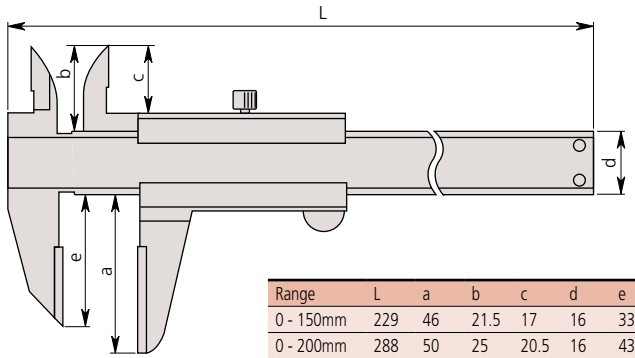

Range	L	a	b	c	d	e
0 - 150mm	229	46	21.5	17	16	33
0 - 200mm	288	50	25	20.5	16	43
0 - 300mm	403	64	27.5	22	20	54

ABSOLUTE Inside Caliper

SERIES 573, 536 — Knife-edge/Inside Groove/Point-Jaw Type

FEATURES

- Specially designed for inside measurements in hard-to-reach places.
- With SPC data output. (Series 573)
- Supplied in fitted plastic case. 18" / 450mm and 24"/ 600mm supplied in wooden case.

Knife-edge type

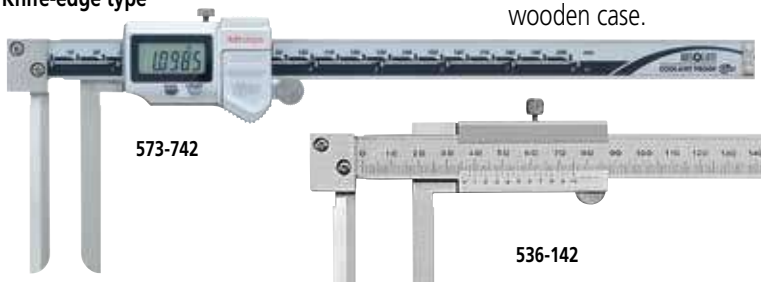

573-742

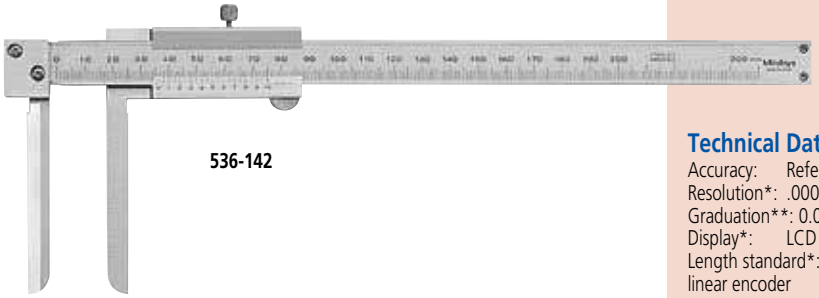

536-142

Inside-groove type



573-745



536-145

Point-jaw type



573-746

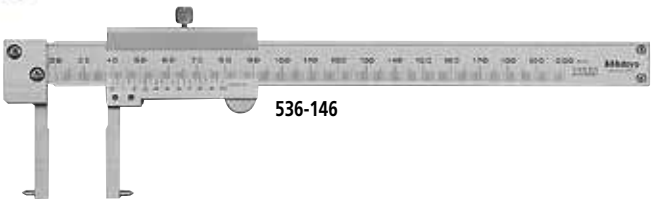

536-146

SPECIFICATIONS

Metric Digital model

Range	Order No.	Accuracy	Remarks	Mass (g)
10 - 200mm	**573-642**	±0.05mm	Knife-edge type, Measurable min. hole diameter: ø10mm	227
10 - 160mm	**573-645**	±0.05mm	Inside-groove type, Measurable min. hole diameter: ø10mm	147
20 - 170mm	**573-646**	±0.03mm	Point-jaw type, Measurable min. hole diameter: ø20mm	157

Inch/Metric Digital model

Range	Order No.	Accuracy	Remarks	Mass (g)
.4" - 8" / 10-200mm	**573-742**	±.002"	Knife-edge type, Measurable min. hole diameter: ø.4"	227
.4" - 6" / 10-150mm	**573-745**	±.002"	Inside-groove type, Measurable min. hole diameter: ø.4"	147
.8" - 6" / 20-150mm	**573-746**	±.0015"	Point-jaw type, Measurable min. hole diameter: ø.8"	157

Metric

Range	Order No.	Accuracy	Remarks	Mass (g)
10 - 200mm	**536-142**	±0.12mm	Knife-edge type, Measurable min. hole diameter: ø10mm	210
10 - 150mm	**536-145**	±0.05mm	Inside groove type, Measurable min. hole diameter: ø10mm	130
20 - 150mm	**536-146**	±0.05mm	Point jaw type, Measurable min. hole diameter: ø20mm	140
30 - 300mm	**536-147**	±0.08mm	Point jaw type, Measurable min. hole diameter: ø30mm	370
70 - 450mm	**536-148**	±0.10mm	Point jaw type, Measurable min. hole diameter: ø70mm	1,250
70 - 600mm	**536-149**	±0.12mm	Point jaw type, Measurable min. hole diameter: ø70mm	1,430

ABSOLUTE®
Absolute System Patented by MITUTOYO

Technical Data

Accuracy: Refer to the list of specifications
Resolution*: .0005"/0.01mm / 0.01mm
Graduation**: 0.05mm
Display*: LCD
Length standard*: ABSOLUTE electrostatic capacitance type linear encoder
Max. response speed*: Unlimited
Battery*: SR44 (1 pc.), **938882**
Battery life*: Approx. 3.5 years under normal use
*Digital models **Analog models

Function of Digital Model

Origin-set, Zero-setting, Power On/Off, Data output, inch/mm conversion (on inch/metric models only)
Alarm: Low voltage, Counting value composition error

Optional Accessories for Digital Model

05CZA624: SPC cable with data switch (40" / 1m)
05CZA625: SPC cable with data switch (80" / 2m)

Knife-edge type

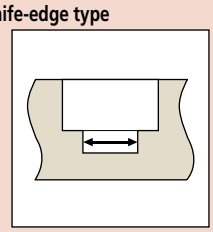

Inside groove type

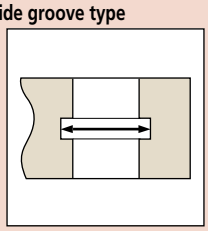

Point jaw type

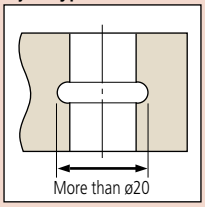

DIMENSIONS AND MASS

Unit: mm

Knife-edge type

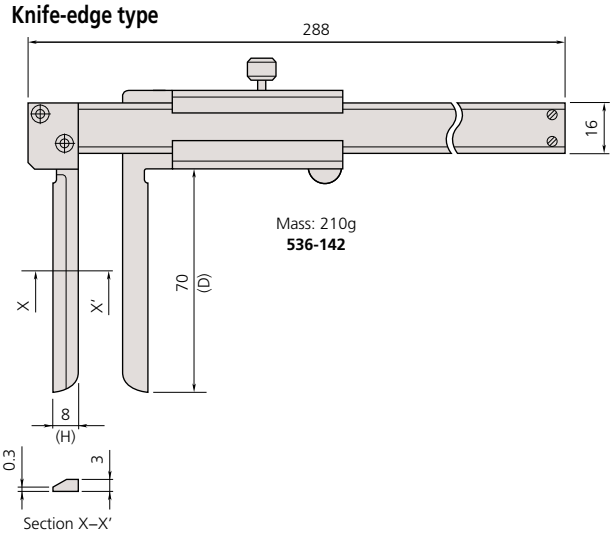

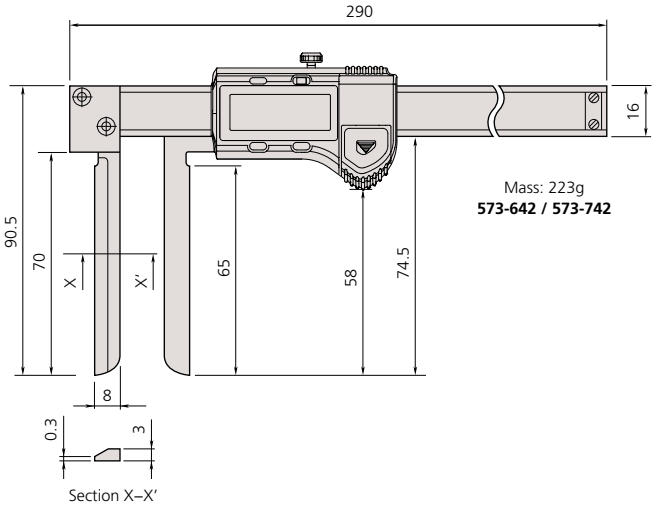

Inside groove type

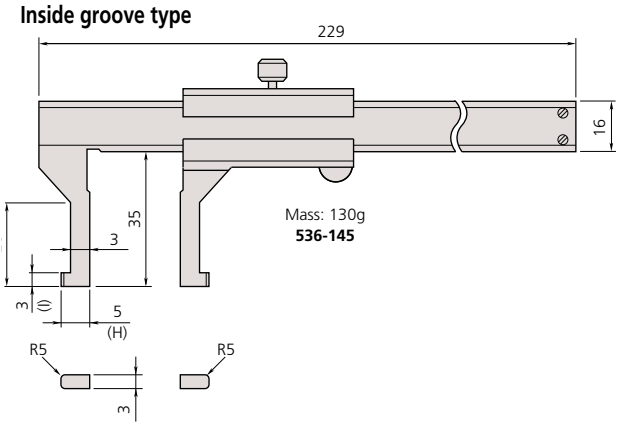

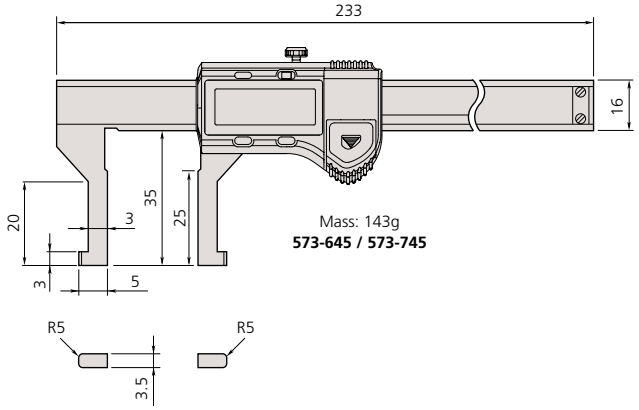

Point jaw type

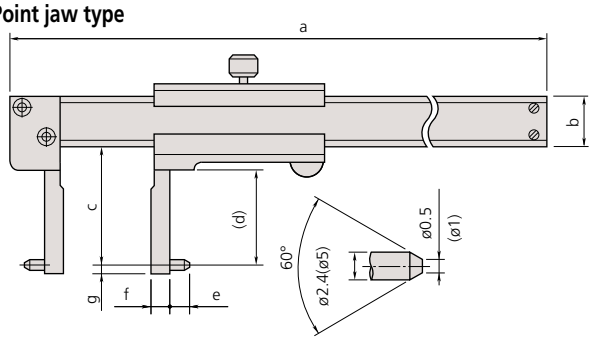

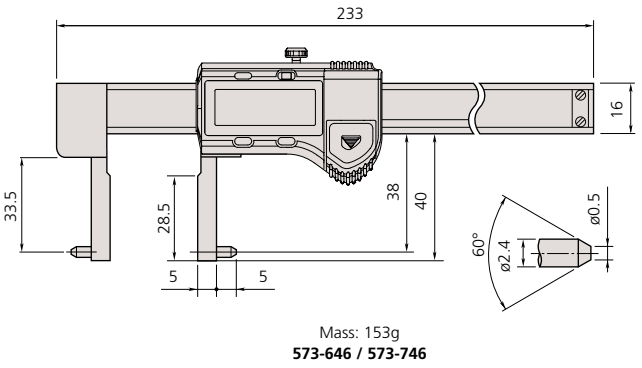

Order No.	Range	a	b	c	d	e	f	g	Mass (g)
536-146	150mm	229	16	38	31	5	5	2	140
536-147	300mm	403	20	98	89	5	10	2	370
536-148	450mm	610	25	145	136	10	25	5	1,250
536-149	600mm	750	25	145	136	10	25	5	1,430

Mitutoyo

MyCAL-Lite

SERIES 700 — Digital Caliper for DIY

FEATURES

- The MyCAL-Lite is an ideal measuring tool for the DIY market.
- The LCD screen allows error-free readout of measurements.
- With depth measuring bar.

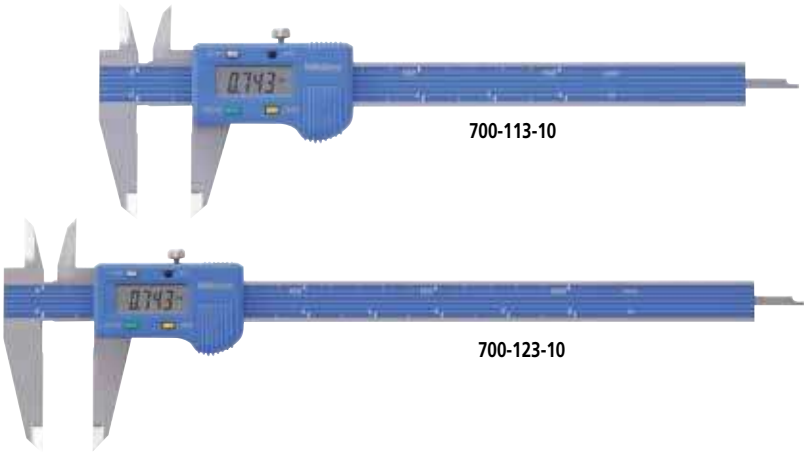

700-113-10

700-123-10

SPECIFICATIONS

Inch/Metric

Range	**Order No.**	Accuracy	Mass (g)
0 - 6″ / 0 - 150mm	**700-113-10**	±.005″ / ±0.2mm	150
0 - 8″ / 0 - 200mm	**700-123-10**	±.005″ / ±0.2mm	170

DIMENSIONS

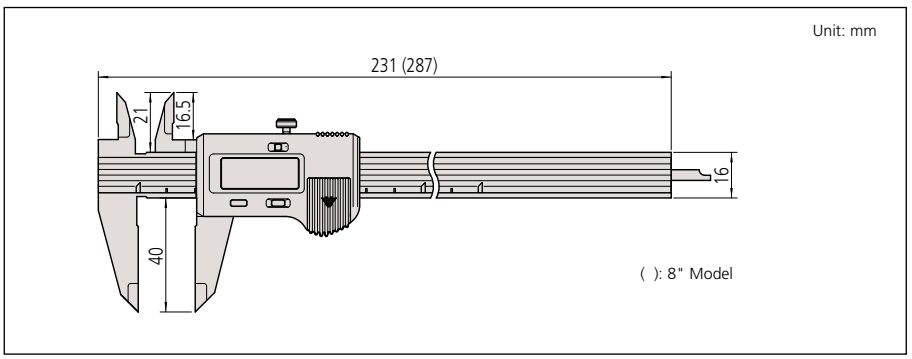

Technical Data

Accuracy: Refer to the list of specifications
Resolution: .001″ / 0.1mm
Display: LCD
Length standard: Electrostatic capacitance type linear encoder
Max. response speed: 1800mm/s
Battery: SR44 (1 pc.), **938882**
Battery life*: Approx. 2 years under normal use

Function

Zero-setting, Power on/off
inch/mm conversion
Alarm: Low voltage, Counting value composition error

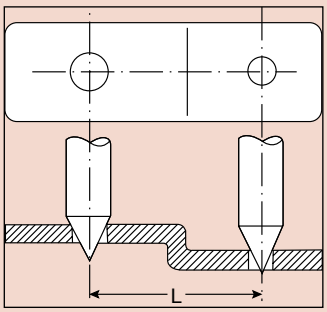

Center Line Gage

Optional Accessories for Caliper

FEATURES

Pairs of conical probes are specially designed for Digimatic, Dial and Vernier calipers to quickly measure centerline distances.

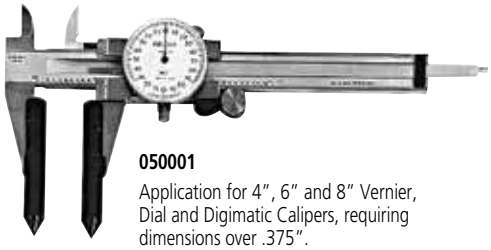

050001

Application for 4″, 6″ and 8″ Vernier, Dial and Digimatic Calipers, requiring dimensions over .375″.



050018

Application for 12″ Vernier, Dial and Digimatic Calipers requiring dimensions over .5″.

SPECIFICATIONS

Center Line Gage

Order No.	Description
050001	For 4, 6 and 8″ Calipers
050018	For 12″ Calipers

DIMENSIONS

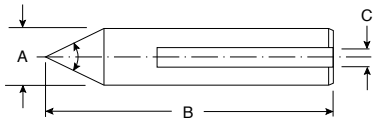

	A	B	C
050001	.375″	2.187″	.141″
050018	.500″	2.75″	.154″

Depth Base Attachment

Optional Accessories for Caliper

FEATURES

- For 4″, 6″, 8″, 12″ / 100mm, 150mm, 200mm, 300mm, vernier, dial and digital calipers which have a depth measuring bar.
- Finely grounded base surface and secure locking clamp.



050084-10

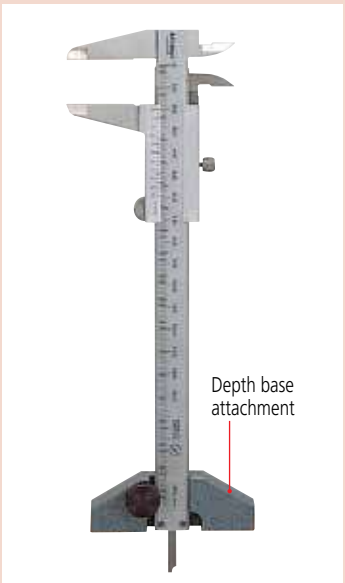

SPECIFICATIONS

Inch/Metric

Size	Order No.	Remarks (applicable measuring range of caliper)
3″ / 75mm	**050083-10**	4″, 6″, 8″ / 100mm, 150mm, 200mm
4″ / 100mm	**050084-10**	4″, 6″, 8″ / 100mm, 150mm, 200mm
5″ / 125mm	**050085-10**	12″ / 300mm

DIMENSIONS

Unit: mm

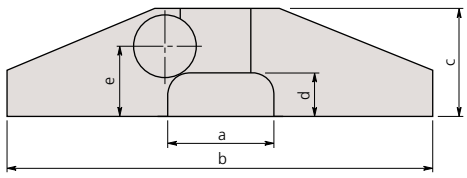

Size	a	b	c	d	e	t
3″ / 75mm	25	75	26.5	13	18.5	12
4″ / 100mm	25	100	26.5	13	18.5	12
5″ / 125mm	30	125	28.5	13	20	14

t: Base thickness

Mitutoyo

Quick Guide to Precision Measuring Instruments

Calipers

Nomenclature

Vernier Caliper

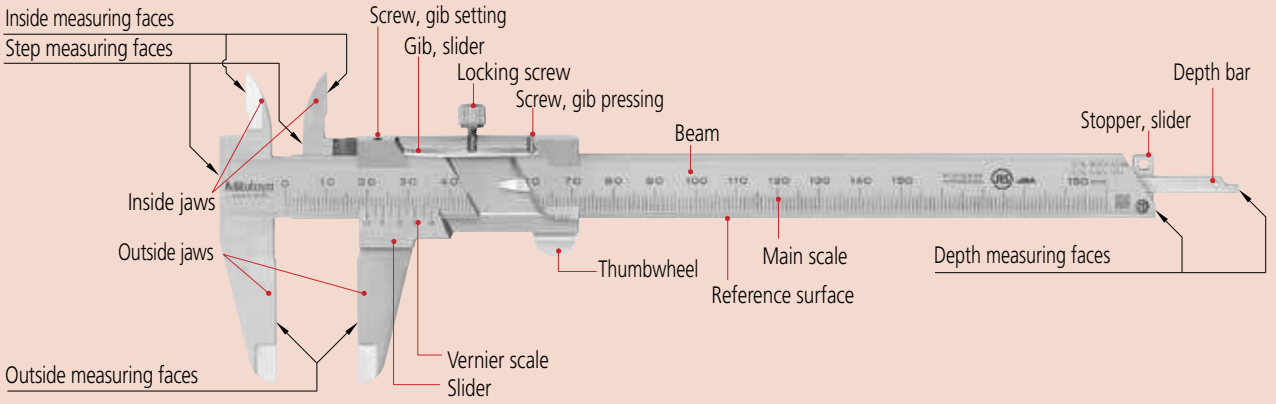

Absolute Digimatic Caliper

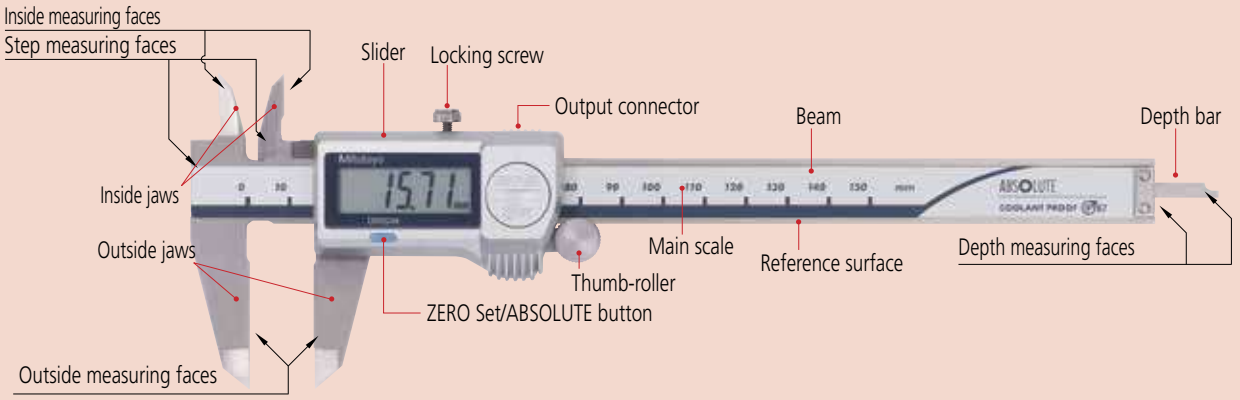

How to Read the Scale

Vernier Calipers

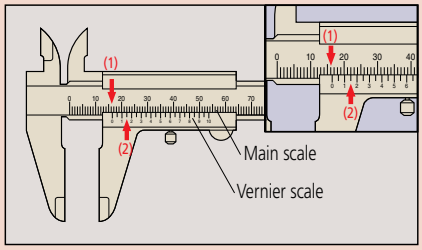

Graduation	0.05mm	
(1) Main scale	16	mm
(2) Vernier	0.15	mm
Reading	16.15	mm

Dial Calipers

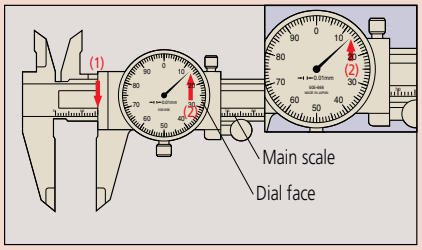

Graduation	0.01mm	
(1) Main scale	16	mm
(2) Dial face	0.13	mm
Reading	16.13	mm

Note) Above left, 0.15 mm (2) is read at the position where a main scale graduation line corresponds with a vernier graduation line.

Measurement applications

1. Outside measurement

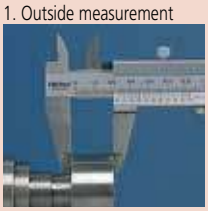

2. Inside measurement

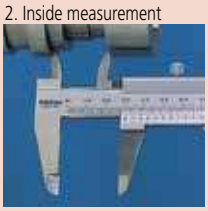

3. Step measurement



4. Depth measurement



Special Purpose Caliper Applications

Point jaw type

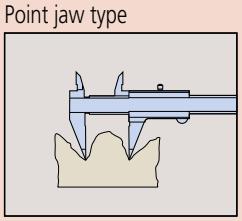

For uneven surface measurement

Offset jaw type

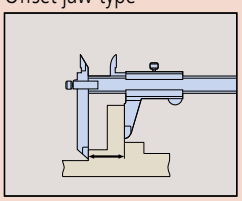

For stepped feature measurement

Depth type

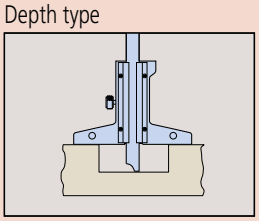

For depth measurement

Blade jaw type

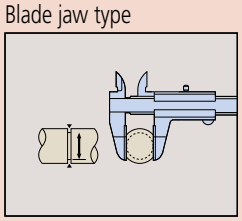

For diameter of narrow groove measurement

Vernier scale

This is a short auxiliary scale that enables accurate interpolation between the divisions of a longer scale without using mechanical magnification. The principle of operation is that each vernier scale division is slightly smaller than a main scale division, so that successive vernier graduations successively coincide with main scale graduations as one is moved relative to the other. Specifically, n divisions on a vernier scale are the same length as n-1 divisions on the main scale it works with, and n defines the division (or interpolation) ratio. Although n may be any number, in practice it is typically 10, 20, 25, etc., so that the division is a useful decimal fraction. The example below is for n = 10. The main scale is graduated in mm, and so the vernier scale is 9mm (10 divisions) long, the same as 9mm (9 divisions) on the main scale. This produces a difference in length of 0.1mm (1) as shown in figure A (the 1st vernier graduation is aligned with the first main scale graduation). If the vernier scale is slid 0.1mm to the right as shown in figure B, the 2nd graduation line on the vernier scale moves into alignment with the 2nd line on the main scale (2), and so enables easy reading of the 0.1mm displacement.

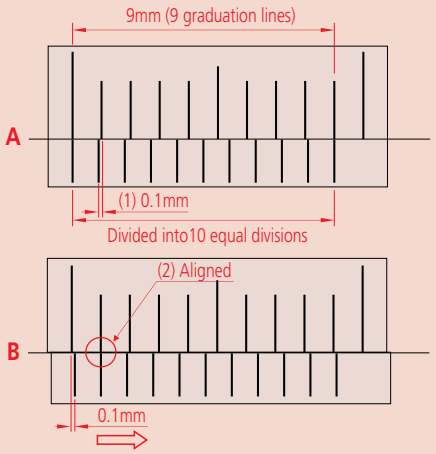

Some early calipers divided 19 divisions on the main scale by 20 vernier divisions to provide 0.05mm resolution. However, the closely spaced lines proved difficult to read and so, since the 1970s, a long vernier scale that uses 39 main scale divisions to spread the lines is generally used instead, as shown below.

● 19mm Vernier scale

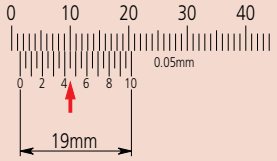

Scale reading 1.45mm

● 39mm vernier scale (long vernier scale)



Scale reading 30.35mm

Calipers were made that gave an even finer resolution of 0.02mm. These required a 49-division vernier scale dividing 50 main scale divisions. However, they were difficult to read and are now hard to find since digital calipers with an easily read display and resolution of 0.01mm appeared.

C-type

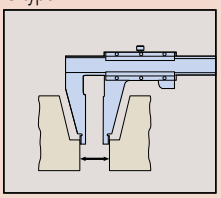

Standard outside measurement
Inside measurement of a stepped hole
Measurement of a stepped part

CN-type

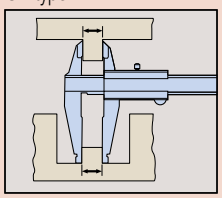

Standard outside measurement
Measurement of a stepped hole
Measurement of a stepped part

About Long Calipers

Steel rules are commonly used to roughly measure large workpieces, but if more accuracy is needed, then a long caliper is suitable for the job. A long caliper is convenient for its user friendliness but does require some care during use. In the first place it is important to realize there is no relationship between resolution and accuracy. For details, refer to the values in our catalog. Resolution is constant whereas the accuracy obtainable varies dramatically according to how the caliper is used.
The measuring method with this instrument is a concern since distortion of the main beam causes a large amount of the measurement error, so accuracy will vary greatly depending on the method used for supporting the caliper at the time. Also, be careful not to use too much measuring force when using the outside measuring faces as they are furthest away from the main beam so potential errors will be at a maximum here. This precaution is also necessary when using the tips of the outside measuring faces of a long-jaw caliper.

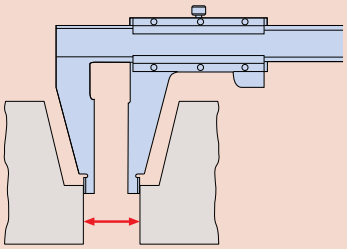

Small hole measurement with an M-type caliper

Structural error (d) occurs when you measure the internal diameter of a small hole.

øD: True internal diameter
ød: Measured diameter
t_1, t_2: Thickness of the inside jaw
C: Distance between the inside jaws
Δd: Measurement error (øD – ød)

True internal diameter (øD: 5mm)
Unit: mm

t_1+t_2+C	0.3	0.5	0.7
Δd	0.009	0.026	0.047

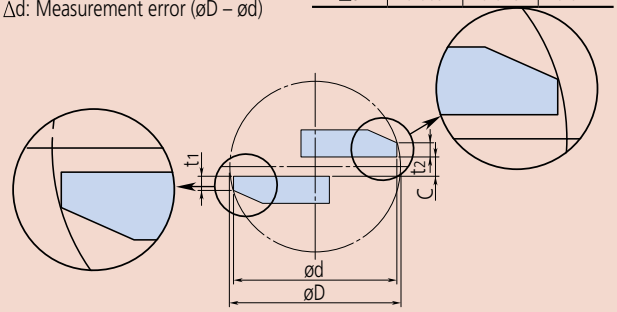

Inside Measurement with a CM-type Caliper

Because the inside measuring faces of a CM-type caliper are at the tips of the jaws, the measuring face parallelism is heavily affected by measuring force, and this becomes a large factor in the measurement accuracy attainable.
In contrast to an M-type caliper, a CM-type caliper cannot measure a very small hole diameter because it is limited to the size of the stepped jaws, although normally this is not an inconvenience as it would be unusual to have to measure a very small hole with this type of caliper. Of course, the radius of curvature on the inside measuring faces is always small enough to allow correct hole diameter measurements right down to the lowest limit (jaw closure).
Mitutoyo CM-type calipers are provided with an extra scale on the slider for inside measurements so they can be read directly without the need for calculation, just as for an outside measurement. This useful feature eliminates the possibility of error that occurs when having to add the inside-jaw-thickness correction on a single-scale caliper.

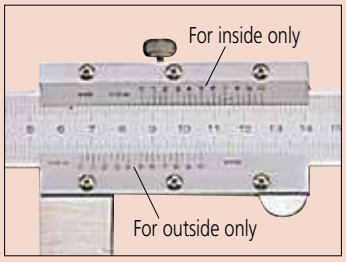



Linear Height LH-600E

SERIES 518 — High-Performance 2D Measurement System

FEATURES

- Excellent accuracy of (1.1+0.6L/600)µm with 0.1µm/0.5µm resolution/repeatability.
- Perpendicularity (frontal) of 5µm and straightness of 4µm are guaranteed.
- Pneumatic full/semi-floating system allows adjustment of air-cushion height.
- Basic statistical functions are provided and, additionally, RS-232C / USB data output provides the option of evaluating measurement data externally with SPC software on a PC.
- One-key operation for running a semi-automatic measurement.
- Data entry from a Digimatic tool.

With power grip







518-351A-21

SPECIFICATIONS

Inch/Metric

Order No.		518-351A-21	518-352A-21 w/power grip
Model		LH-600E	LH-600EG
Measuring Range (stroke)		0-38" (24") / 0-972mm(600mm)	
Resolution (selectable)		.000001"/.00001"/.0001"/.001"/ 0.0001mm/0.001mm/0.01mm/0.1mm	
Accuracy at 20°C	Measuring accuracy	(43+L*)µin / (1.1 + 0.6L**/600)µm	
	Repeatability (2s)	Plane: .000015"/0.4µm Bore: .000035"/0.9µm	
	Perpendicularity	.0002"/5µm	
	Straightness	.0002"/4µm	
Drive Method		Motor Drive (5, 10, 15, 20, 25, 30, 40mm/s=7 steps) / manual	
Measuring Force		1N	
Balancing Method		Counter balance	
Main Unit Floating Method		Full/semi-floating with air	
Air Source		Built-in air compressor	
LCD		TFT LCD (color)	
Language for Display		English/German/French/Spanish/Italian/Japanese	
Number of Programs		50 (max.)	
Number of Datas		60,000 (max.) 1 program 30,000 (Max.)	
Power Supply		AC Adapter/Battery (Ni-MH)	
Power Consumption		43VA	
Operation Time		Approx. 5 hours	
Standard Accessories		ø5 Eccentric probe (**12AAF634**)	
		Probe diameter calibration block (**12AAA715**)	
		Battery (**12AAF712**)	
		AC adapter (**357651**), Power Cable (**02ZAA010**)	
		Clear Cover (**223587**)	
		Conveying handle (**510434**)	
Mass		24kg	24.5kg

L*=Measuring length (inch) L**=Measuring length (mm)

Mitutoyo guarantees the product quality. PROPRIETARY INSPECTION CERTIFICATE Mitutoyo guarantees the product quality.

Technical Data

Measuring range:	0 - 38" / 0 - 972mm
Slider stroke:	24" / 600mm
Resolution: (switchable)	.000001" / .00001" / .0001" / .001" or 0.0001 / 0.001 / 0.01 / 0.1mm / 0.0001 / 0.001 / 0.01 / 0.1mm
Accuracy at 20°C:	Refer to the list of specifications
Floating method:	Full / semi-floating with built-in air compressor
Display:	TFT LCD (color)







5.7" color LCD

Optional Accessories

12AAF712:	Battery pack
12AAA797	Thermal printer (120V)
12AAA802	Thermal printing paper (10pcs.)
12AAA804	Cable for page printer** (2m)
12AAA807	RS-232C cable (80" / 2m)
12AAA808	RS-232C cable (160" / 4m)





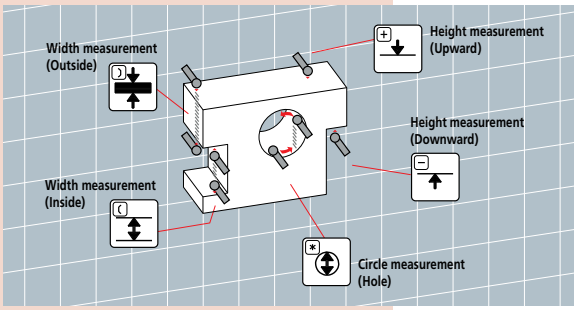

Optional probes and calibration blocks

12AAF666
ø1 ball probe

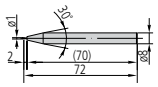

957261
ø2 ball probe

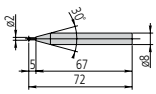

12AAF667
ø2 ruby ball probe



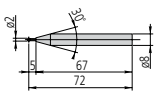

957262
ø3 ball probe

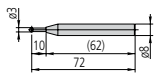

957263
ø4 ball probe

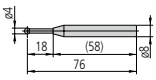

12AAB552
ø10 ball probe, L=55

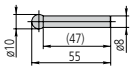

12AAF668
ø10 ball probe, L=82

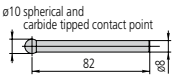

12AAF669
ø10 ball probe, L=120

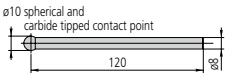

932361
Mu-checker lever head holder
CMM ball and disk hard probes are available.

12AAA787
Block for calibrating probe diameter (applicable to taper probe)

K650986
Styli Kit M3

12AAF670
ø5 disk probe

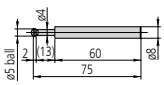

12AAF671
ø10 disk probe

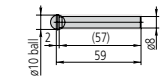

957264
ø14 disk probe

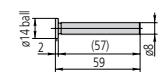

957265
ø20 disk probe

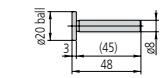

12AAF672
ø1 ball offset probe*
*test indicator stylus (103017)

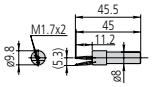

12AAF673
ø2 ball offset probe

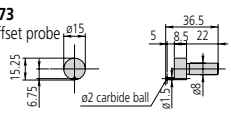

12AAA788
ø4 ball offset probe

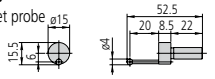

12AAA789
ø6 ball offset probe

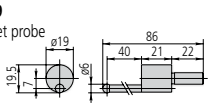

226117
M2 CMM stylus adapter



226118
M3 CMM stylus adapter

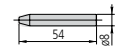

12AAC072 Depth probe

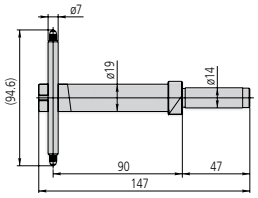

12AAC073 ø20 taper probe

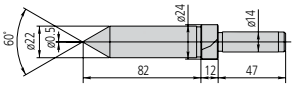

12AAA792 Dial indicator (ø8 stem) holder
12AAA837 Dial indicator (ø3/8"stem) holder

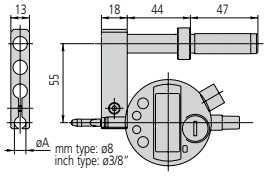

12AAA793 Probe extension holder (85mm/3.3")

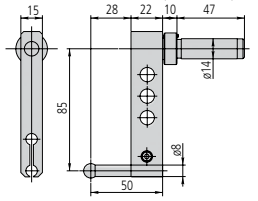

12AAB136 ø10 cylindrical probe

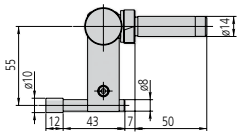

DIMENSIONS AND MASS

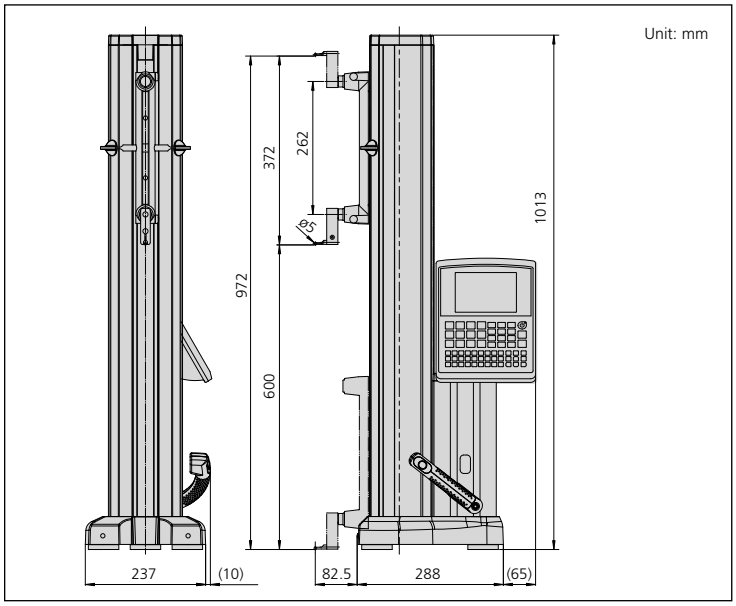

Mitutoyo

QM-Height

SERIES 518 — High-Precision ABSOLUTE Digital Height Gage

FEATURES

- Newly developed high-accuracy and high-resolution ABSOLUTE linear encoder for position detection.
- Easy reference icon keys.
- Possible to measure inside/outside diameter via unique process (detect the circle apex and process by tracing measurement).
- Various types of optional probes are available.
- Large size LCD with back light.
- Go/no-go judgment is performed by setting the upper and lower tolerances. If a result is out of tolerance, the display backlighting changes from green to red, so tolerance judgment can be made at a glance.
- Slider elevation knob (for travel) / wheel (for measurement).
- With SPC and USB output.



64PKA130A

64PKA129A

SPC

ABSOLUTE®
Absolute System Patented by MITUTOYO

Technical Data

Measuring range*:	0 - 18.3″ or 0 - 28.1″ 0 - 465mm or 0 - 715mm
Slider stroke:	14″ / 350mm or 24″ / 600mm
Resolution:	.00005″ / .0001″ / .0002″ / 0.001 / 0.005mm or 0.001 / 0.005mm
Accuracy at 20°C:	Refer to the list of specifications
Guiding method:	Roller bearing
Drive method:	Manual
Length standard:	ABSOLUTE electromagnetic induction-type linear encoder
Measuring force:	1.5±0.5N
Display:	LCD
Power supply:	AC adapter (06AEG180JA) 120V battery (LR6x4)

Battery operation time: Refer to the list of specifications

* Maximum values are obtained with the probe at the highest position. Any change of the probe orientation requires the coordinate system be re-zeroed. With the probe in the highest position, minimum measurable height is 4.53″/115mm.



SPECIFICATIONS

Inch/Metric

Order No.	64PKA094A	64PKA095A	64PKA129A	64PKA130A
Model	QMH-14″A	QMH-24″A	QMH-14″B	QMH-24″B
Range	0 - 14″/ 0-350mm	0 - 24″/ 0-600mm	0 - 14″/ 0-350mm	0 - 24″/ 0-600mm
Resolution	0.001 / 0.0005mm /.00005″ / .0001″			
Accuracy at 20°C Accuracy*1	±(2.4+2.1L/600)μm L = Measuring length (mm)			
Repeatability*1	2σ≦1.8μm			
Perpendicularity	7μm	12μm	7μm	12μm
Guiding method	Roller bearing			
Drive method	Manual operation			
Scale type	Electromagnetic induction-type ABSOLUTE linear encoder			
Measuring force	1.5±0.5(N)			
Data output	Digimatic output/USB			
Pneumatic floating system	NA		Included (for movement only)	
Power supply	AC adapter battery / (LR6 x 4) Standard accessory / Nickel metal hydride battery (x4)			
Battery life	Approx. 300 hours (Not using pneumatic floating system)			
	Approx. 80 hours (Using pneumatic floating system regularly)			
Standard accessories	Stepped probe (05H2A148) Probe diameter calibration block (12AAA715) LR6 Battery / AC Adapter (06AEG180JA) 120V			
Mass	55.16 lbs (25kg)	63.93 lbs (29kg)	57.32 lbs (26kg)	66.14 lbs (30kg)
Dimensions	41.85″x21.85x18.94″ 1063(W)x555(D)x481(H)	51.02″x21.85x18.94″ 1296(W)x555(D)x481(H)	41.85″x21.85x18.94″ 1063(W)x555(D)x481(H)	51.02″x21.85x18.94″ 1296(W)x555(D)x481(H)
Main Unit	518-231	518-233	518-235	518-237

*1 Guaranteed when using the standard eccentric ø5 probe.

Optional Accessories

12AAC072: Depth probe
12AAA792: Dial indicator (ø8mm stem) holder
12AAA837: Dial indicator (ø3/8"stem) holder
12AAA793: Probe extension holder (3.3" / 85mm)
12AAF667: ø2mm ruby ball probe
957261: ø2mm ball probe
957262: ø3mm ball probe
957263: ø4mm ball probe
05HAA394: ø5mm ball probe (for 05HZA148)
12AAB552: ø10 mm ball probe, L=55mm
12AAF670: ø5mm ball probe
12AAF671: ø10mm ball probe
957264: ø14mm disk probe
957265: ø20mm disk probe
12AAA788: ø4mm ball offset probe
05HAA394: ø5mm ball offset probe
12AAA789: ø6mm ball offset probe
05HZA173: Scriber
264-504-5A: DP-1VR
936937: SPC cable (40" / 1m)
965014: SPC cable (80" / 2m)

Circle pitch measurement

The length A, B, C and D can be determined by measuring circles 1 to 3 once each, using the memory of measuring data together with the calculation function. (A maximum of nine circle measurements can be saved.)

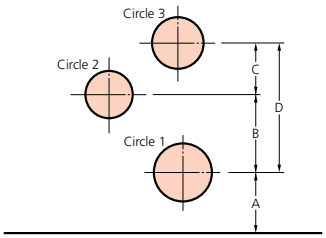

Maximum/minimum and displacement measurement

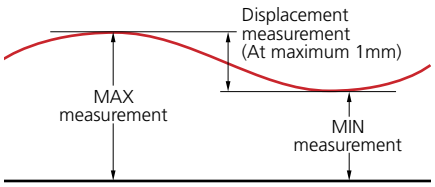



Inside diameter measurement

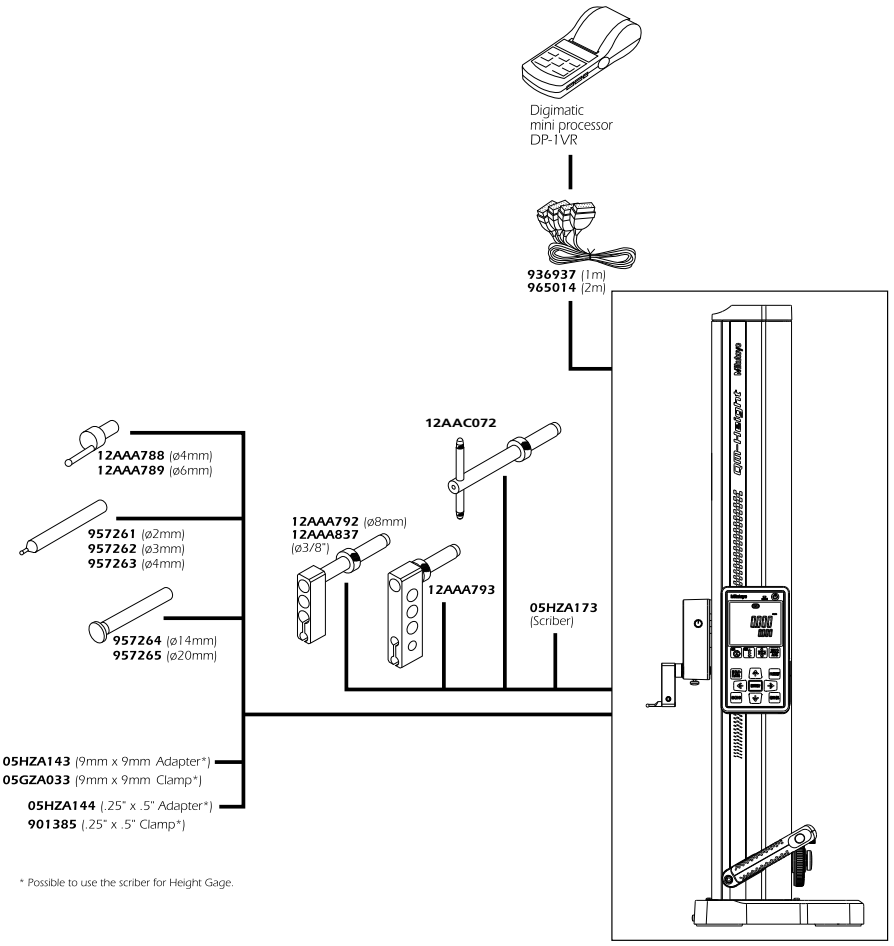

DIMENSIONS

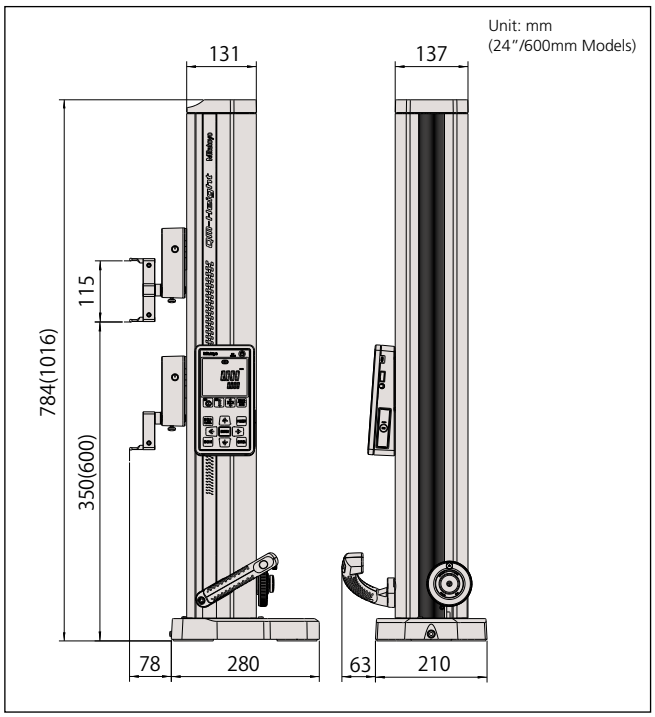

Digimatic Height Gage

SERIES 192 — Multi-Function Type with SPC Data Output

FEATURES

- Highly versatile multi-function type.
- Carbide-tipped long scriber is provided.
- Rigid construction ensures repeatable measurement.
- Switchable resolution (.0002"/0.005mm or .0005"/0.01mm)
- Coarse/fine feed switching.
- Bi-directional touch-signal probe is an optional accessory. It can quickly and accurately measure steps, inside width and outside width.
- With SPC data output.
- Two preset reference heights.



192-670-10

SPECIFICATIONS

Inch/Metric

Range	Order No.	Accuracy	Resolution	Mass (kg)
0-12"/0-300mm	**192-670-10**	±001"	.0005"(0.01mm) [.0002"(0.005mm) Switchable)]	5.7
0-18"/0-450mm	**192-671-10**	±0015"	.0005"(0.01mm) [.0002"(0.005mm) Switchable)]	7.5
0-24"/0-600mm	**192-672-10**	±0015"	.0005"(0.01mm) [.0002"(0.005mm) Switchable)]	8.3
0-40"/0-1000mm	**192-673-10**	±0025"	.0005"(0.01mm) [.0002"(0.005mm) Switchable)]	15.7

Metric

Range	Order No.	Accuracy	Resolution	Mass (kg)
0-300mm	**192-663-10**	±0.02mm	Switchable between 0.01mm and 0.005mm	5.7
0-600mm	**192-664-10**	±0.04mm	Switchable between 0.01mm and 0.005mm	8.3
0-1000mm	**192-665-10**	±0.06mm	Switchable between 0.01mm and 0.005mm	15.7

DIMENSIONS

0 - 12" / 0 - 300mm, 0 - 18", 0 - 24" / 0 - 600mm

Unit: mm

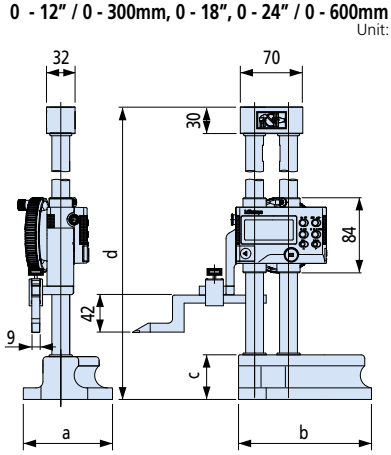

0 - 40" / 0 - 1000mm

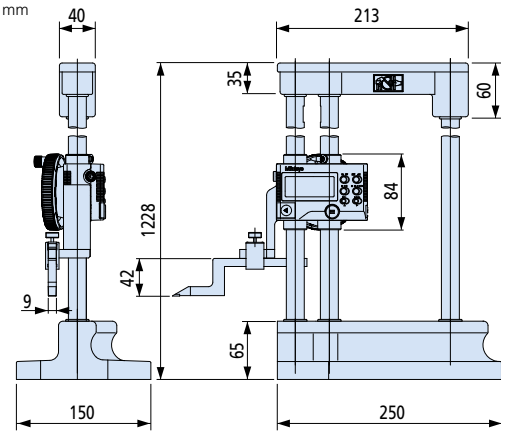

Range	a	b	c	d
0-12"/ 0-300mm	100	149	50	510
0-18"/ 0-450mm	120	180	54	649
0-24"/ 0-600mm	120	180	54	802

SPC

Technical Data

Accuracy: Refer to the list of specifications
Resolution: 0.01+0.005mm or 0.0005"(0.01mm) [0.0002"(0.005mm) switchable]
Display: LCD, 7-digits, character height 11mm
Max. response speed: 500mm/s
Battery: SR44 (1 pc.), **938882**
Battery life: Approx. 2000 hours under normal use

Function

Zero-setting, ABS/INC switching, Two presets, Probe tip diameter compensation, -/+ switching, Power ON/OFF, Data hold, Data output,
inch/mm conversion (on inch/metric models only)
Alarm: Low voltage, Counting value composition error

Standard Scriber Provided

Metric models: Carbide-tipped scriber (**905200**) and scriber clamp (**05GZA033**)
Inch/Metric models: Carbide-tipped scriber (**905201**) and scriber clamp (**901385**)

Optional Accessories

905338: SPC cable (40" / 1m)
905409: SPC cable (80" / 2m)
905691: SPC cable (L-shape, 40" / 1m)
905692: SPC cable (L-shape, 80" / 2m)
192-007: Bi-directional touch-signal probe (metric)
192-008: Bi-directional touch-signal probe (inch)
953638: Holding bar for test indicator (length: 50mm)
900209: Holding bar for test indicator (length: 100mm)
953639: Holding bar for test indicator (length: 2")
900306: Holding bar for test indicator (length: 4")
900321: Swivel clamp used with holding bar (metric)
900322: Swivel clamp used with holding bar (inch)



Shown with optional touch-signal probe

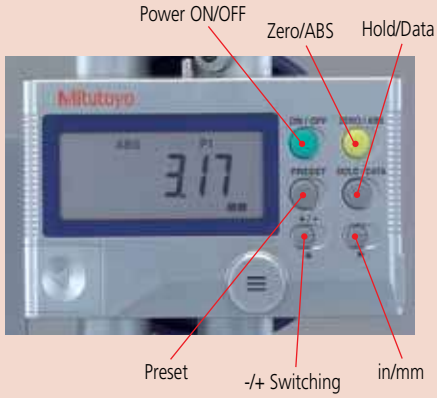

SPC

Digimatic Height Gage

SERIES 192 — Standard Type with SPC Data Output

FEATURES

- Switchable resolution (.0002"/0.005mm or .0005"/0.01mm)
- Easy-to-use standard type.
- Carbide-tipped scriber is provided.
- Double-column structure ensures high measuring accuracy.
- Coarse/fine feed switching.
- Two preset reference heights.

Technical Data

Accuracy: Refer to the list of specifications
Resolution: .0005"(0.01mm) [.0002"(0.005mm)] or 0.01mm and 0.005mm
Display: LCD, 7-digit, character height 11mm
Max. response speed: 500mm/s
Battery: SR44 (1 pc.), **938882**
Battery life: Approx. 2000 hours under normal use

Function

Zero-setting, ABS/INC switching, Two presets, Probe tip diameter compensation, -/+ switching, Power ON/OFF, Data hold, With Output,
inch/mm conversion (on inch/metric models only)
Alarm: Low voltage, Counting value composition error

Standard Scriber Provided

Metric models: Carbide-tipped scriber (**07GZA000**) and scriber clamp (**05GZA033**)
Inch/Metric models: Carbide-tipped scriber (**900258**) and scriber clamp (**901385**)

Optional Accessories

953638: Holding bar for test indicator (length: 50mm)
900209: Holding bar for test indicator (length: 100mm)
953639: Holding bar for test indicator (length: 2")
900306: Holding bar for test indicator (length: 4")
900321: Swivel clamp used with holding bar (metric)
900322: Swivel clamp used with holding bar (inch)
905338: SPC cable (CD type) 1m
905409: SPC cable (CD type) 2m
905691: CD/Connecting cable L-Type 1m RIG
905692: CD/Connecting cable L-Type 2m RIG



192-630-10

SPECIFICATIONS

Inch/Metric

Range	Order No.	Accuracy	Resolution	Mass (kg)
0-12"/0-300mm	**192-630-10**	±001"	.0005"(0.01mm) [.0002"(0.005mm) Switchable)]	4.7
0-18"/0-450mm	**192-631-10**	±002"	.0005"(0.01mm) [.0002"(0.005mm) Switchable)]	7.5
0-24"/0-600mm	**192-632-10**	±002"	.0005"(0.01mm) [.0002"(0.005mm) Switchable)]	8.3
0-40"/0-1000mm	**192-633-10**	±003"	.0005"(0.01mm) [.0002"(0.005mm) Switchable)]	15.7

Metric

Range	Order No.	Accuracy	Resolution	Mass (kg)
0-300mm	**192-613-10**	±0.02mm	Switchable between 0.01mm and 0.005mm	4.7
0-600mm	**192-614-10**	±0.05mm	Switchable between 0.01mm and 0.005mm	8.3
0-1000mm	**192-615-10**	±0.07mm	Switchable between 0.01mm and 0.005mm	15.7

DIMENSIONS

0 - 12" / 0 - 300mm, 0 - 18", 0 - 24" / 0 - 600mm

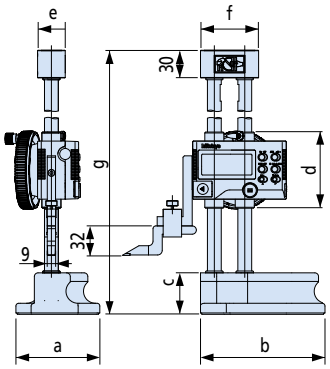

0 - 40" / 0 - 1000mm

Unit: mm

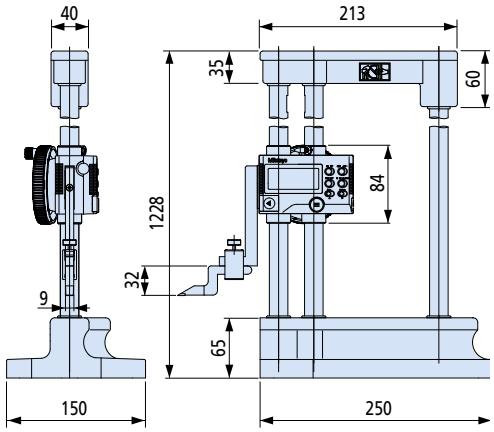

Range	a	b	c	d	e	f	g
0-12"/ 0-300mm	91	135	45	83	30	63	475
0-18"/ 0-450mm	120	180	54	84	32	70	649
0-24"/ 0-600mm	120	180	54	84	32	70	802

Mitutoyo

Dial Height Gage

SERIES 192 — with Digital Counter

FEATURES

- Easy and error-free reading with both up and down digital counters, as well as a dial.
- Provided with a feed wheel for easy coarse feeding.
- Carbide-tipped scriber is provided.
- The counters and dial can be re-zeroed at any scriber position.



192-150

SPECIFICATIONS

Metric

Range	Order No.	Accuracy	Graduation	Mass (kg)
0 - 300mm	**192-130**	±0.03mm	0.01mm	4.2
0 - 450mm	**192-131**	±0.05mm	0.01mm	9.2
0 - 600mm	**192-132**	±0.05mm	0.01mm	9.8
0 - 1000mm	**192-133**	±0.07mm	0.01mm	17.0

Inch

Range	Order No.	Accuracy	Graduation	Mass (kg)
0 - 12"	**192-150**	±.0015"	.001"	4.2
0 - 18"	**192-151**	±.002"	.001"	9.2
0 - 24"	**192-152**	±.002"	.001"	9.8
0 - 40"	**192-153**	±.003"	.001"	17.0

DIMENSIONS

0 - 12" / 0 - 300mm, 0 - 18" / 0 - 450mm
0 - 24" / 0 - 600mm

0 - 40" / 0 - 1000mm

Unit: mm

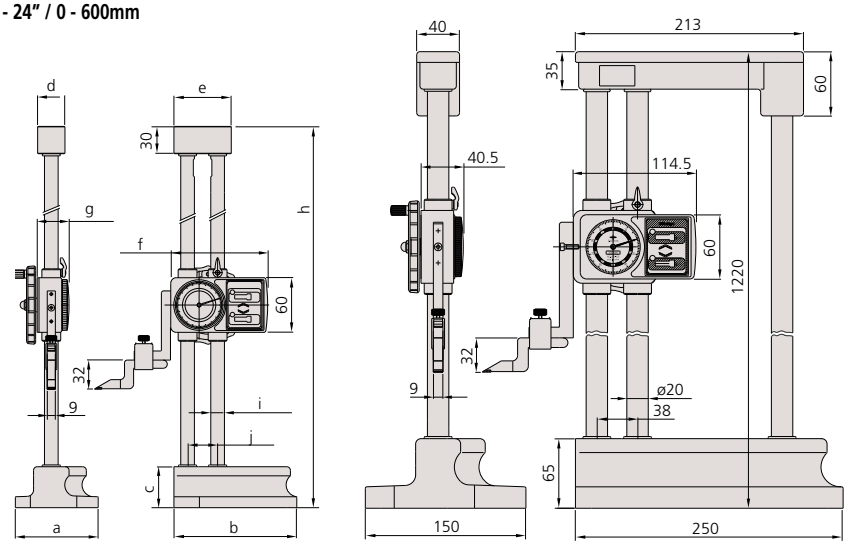

Range	a	b	c	d	e	f	g	h	i	j
0-12"/ 0-300mm	91	135	45	30	63	106.5	35.5	470	ø15	33
0-18"/ 0-450mm	120	180	54	32	70	114.5	40.5	645	ø20	38
0-24"/ 0-600mm	120	180	54	32	70	114.5	40.5	798	ø20	38

Technical Data

Dial reading: 0.01mm or .001"

Standard Scriber Provided

Metric models: Carbide-tipped scriber (**07GZA000**) and scriber clamp (**05GZA033**)
Inch/Metric models: Carbide-tipped scriber (**900258**) and scriber clamp (**901385**)

Dimension of scriber

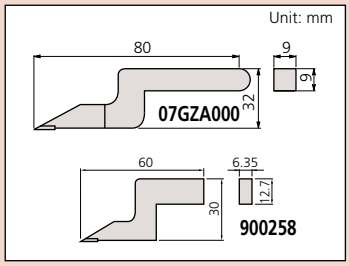

Optional Accessories

953638: Holding bar for test indicator (length: 50mm)
900209: Holding bar for test indicator (length: 100mm)
953639: Holding bar for test indicator (length: 2")
900306: Holding bar for test indicator (length: 4")
900321: Swivel clamp used with holding bar (metric)
900322: Swivel clamp used with holding bar (inch)



Comfortable grip base



Easy and secure clamping



Easy and error-free reading

ABSOLUTE Digimatic Height Gage

SERIES 570 — with ABSOLUTE Linear Encoder

FEATURES

- Built-in ABSOLUTE linear encoder
  This encoder eliminates the necessity of setting the reference point at every power-on. It has improved reliability because no over-speed error will occur.
- Fine-adjustment carriage for smooth movement.
- Carbide-tipped scriber is provided.
- With SPC data output.



SPECIFICATIONS

Metric

Range	Order No.	Accuracy	Resolution	Mass (kg)
0 - 200mm	**570-227**	±0.03mm	0.01mm	1.4
0 - 1000mm	**570-230**	±0.07mm	0.01mm	16.8

Inch/Metric

Range	Order No.	Accuracy	Resolution	Mass(kg)
0 - 8" / 0 - 200mm	**570-244**	±.001"	.0005" / 0.01mm	1.4
0 - 40" / 0 - 1000mm	**570-248**	±.003"	.0005" / 0.01mm	16.8

Technical Data

Accuracy: Refer to the list of specifications
Resolution: .0005"/ 0.01mm or 0.01mm
Display: LCD, 6-digit
Length standard: ABSOLUTE electrostatic capacitance type linear encoder
Max. response speed: Unlimited
Battery: SR44 (1 pc.), **938882**
Battery life: Approx. 5000 hours under normal use

Function

Origin setting, ABS/INC switching, Presetting, -/+ switching, Data hold, Data output,
inch/mm conversion (on inch/metric models only)
Alarm: Low voltage, Counting value composition error

Standard Scriber Provided

Metric models: Carbide-tipped scriber (**900173/905200***) and scriber clamp (**901338/05GZA033***)
*0 - 1000mm model
Inch/Metric models: Carbide-tipped scriber (**900173/905201***) and scriber clamp (**901338/901385***)
*0 - 40" model

Dimension of scriber

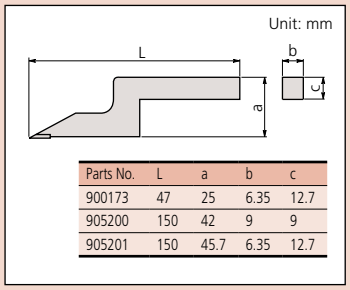

Parts No.	L	a	b	c
900173	47	25	6.35	12.7
905200	150	42	9	9
905201	150	45.7	6.35	12.7

Optional Accessories

905338: SPC cable (40" / 1m)
905409: SPC cable (80" / 2m)
953638: Holding bar for test indicator (length: 50mm)
953639: Holding bar for test indicator (length: 2")
902053: Swivel clamp used with holding bar (metric)
900322: Swivel clamp used with holding bar (inch)

DIMENSIONS

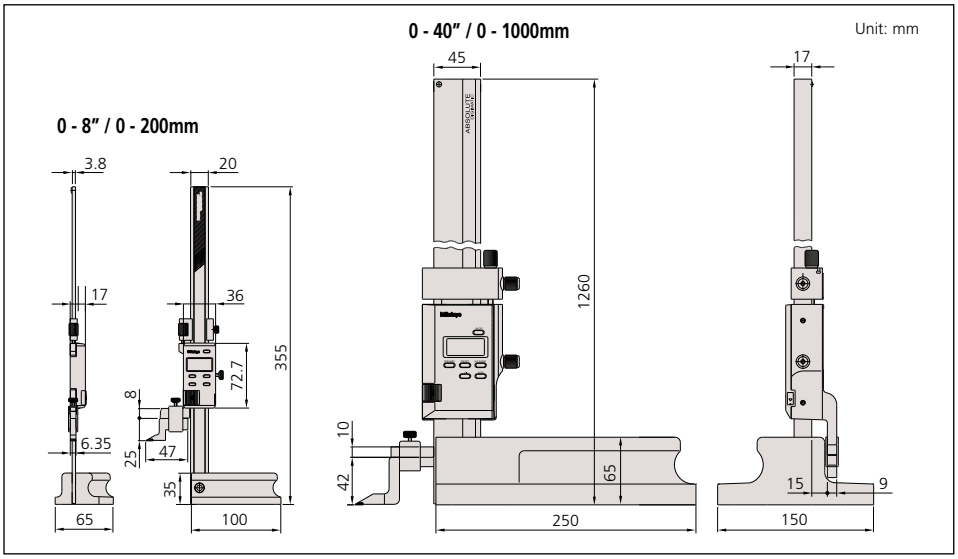

ABSOLUTE Digimatic Height Gage

SERIES 570 — with ABSOLUTE Linear Encoder

FEATURES

- Built-in ABSOLUTE linear encoder
  This encoder eliminates the necessity of setting the reference point at every power-on. It has improved reliability because no over-speed error will occur.
- Rigid column structure ensures high measuring accuracy.
- With large, smooth slider-feed wheel.
- Carbide-tipped scriber is provided.
- With SPC data output.





SPECIFICATIONS

Metric

Range	Order No.	Accuracy	Resolution
0 - 300mm	**570-302**	±0.03mm	0.01mm
0 - 600mm	**570-304**	±0.05mm	0.01mm

Inch/Metric

Range	Order No.	Accuracy	Resolution
0 - 12" / 0 - 300mm	**570-312**	±.0015"	.0005" / 0.01mm
0 - 18" / 0 - 450mm	**570-313**	±.002"	.0005" / 0.01mm
0 - 24" / 0 - 600mm	**570-314**	±.002"	.0005" / 0.01mm

DIMENSIONS AND MASS

Unit: mm

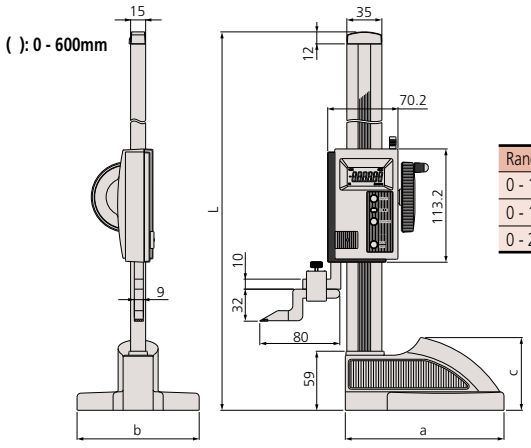

Range	L	a	b	c	Mass (kg)
0 - 12" / 300mm	507	160	122	72.6	4.6
0 - 18" / 450mm	662	181	142	74.1	5.9
0 - 24" / 600mm	812	181	142	74.1	6.4

SPC

ABSOLUTE®
Absolute System Patented by MITUTOYO

Technical Data

Accuracy: Refer to the list of specifications
Resolution: .0005"/0.01mm or 0.01mm
Display: LCD, 6-digit
Length standard: ABSOLUTE electrostatic capacitance-type linear encoder
Max. response speed: Unlimited
Battery: SR44 (1 pc.), **938882**
Battery life: Approx. 20000 hours under normal use

Function

Origin setting, ABS/INC switching, Power ON/OFF, Data hold, Data output,
inch/mm conversion (on inch/metric models only)
Alarm: Low voltage, Counting value composition error

Standard Scriber Provided

Metric models: Carbide-tipped scriber (**07GZA000**), scriber clamp (**05GZA033**)
Inch/Metric models: Carbide-tipped scriber (**900258**), scriber clamp (**901385**)

Dimension of scriber

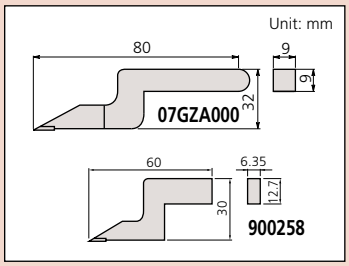

Optional Accessories

905338: SPC cable (40" / 1m)
905409: SPC cable (80" / 2m)
953638: Holding bar for test indicator (length: 50mm)
953639: Holding bar for test indicator (length: 2")
902053: Swivel clamp used with holding bar (metric)
900322: Swivel clamp used with holding bar (inch)


Large, smooth slider-feed wheel


Large clamp lever


Comfortable grip base

Vernier Height Gage

SERIES 514 — Standard Height Gage with Adjustable Main Scale

Technical Data

Main scale adjustment: 15mm or 25mm
Slider fine feed: 4mm, 6mm, 7mm or 20mm

Standard Scriber Provided

Up to 600mm: Carbide-tipped scriber (**07GZA000**) and scriber clamp (**05GZA033**)
0 - 1000mm: Carbide-tipped scriber (**905200**) and scriber clamp (**05GZA033**)
0 - 1500mm: Carbide-tipped scriber (**900390**) and scriber clamp (**905008**)

Dimension of scriber

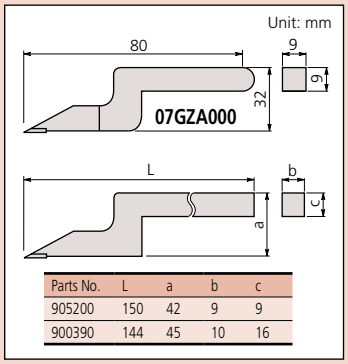

Parts No.	L	a	b	c
905200	150	42	9	9
900390	144	45	10	16

Optional Accessories

07GZA003: Magnifier for 300, 450mm, 600mm models
07GZA015: Magnifier for 1000mm and 1500mm models
953638: Holding bar for test indicator (length: 50mm)
902053: Swivel clamp used with holding bar









FEATURES

- Zero reference point can be adjusted.
- Satin chrome-finished scales for glare-free reading.
- Extra-large base for rigidity.
- Optional magnifier for easier reading
- Carbide-tipped scriber is provided.

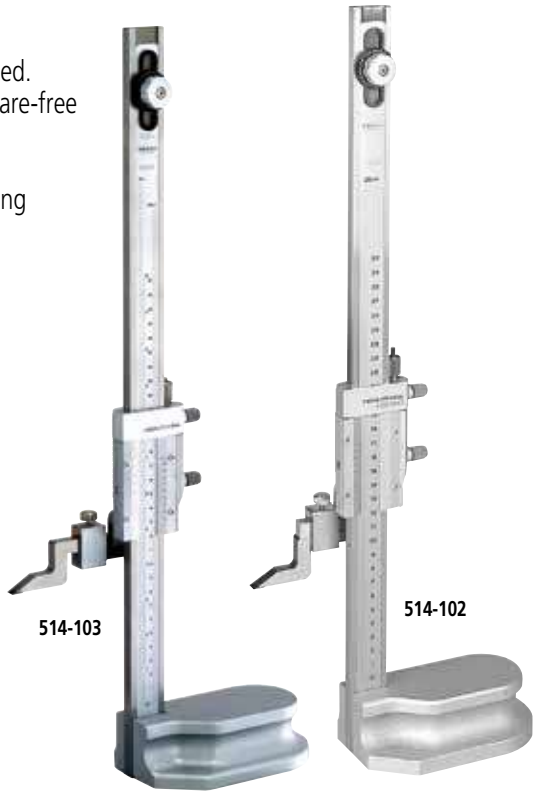

SPECIFICATIONS

Metric

Range	Order No.	Accuracy	Graduation	Mass (kg)
0 - 300mm	**514-102**	±0.04mm	0.02mm	3.1
0 - 450mm	**514-104**	±0.05mm	0.02mm	3.4
0 - 600mm	**514-106**	±0.05mm	0.02mm	7.4
0 - 1000mm	**514-108**	±0.07mm	0.02mm	20.0
0 - 1500mm	**514-170**	±0.18mm	0.02mm	26.0

Inch/Metric Inch model with inch/metric dual scale

Range	Order No.	Accuracy	Graduation	Mass (kg)
0 - 12″ / 0 - 300mm	**514-103**	±.002″	.001″ / 0.02mm	3.1
0 - 18″ / 0 - 450mm	**514-105**	±.002″	.001″ / 0.02mm	3.4
0 - 24″ / 0 - 600mm	**514-107**	±.002″	.001″ / 0.02mm	7.4
0 - 40″ / 0 - 1000mm	**514-109**	±.003″	.001″ / 0.02mm	20.0

DIMENSIONS

Unit: mm

Range	L	a	b	c	d	e	f
0 - 12″ 0 - 300mm	525	32	20	70	28	45	135
0 - 18″ 0 - 450mm	675	32	20	70	28	45	135
0 - 24″ 0 - 600mm	870	32	24	85	35	54	180
0 - 40″ 0 - 1000mm	1340	42	30	110	45	65	250

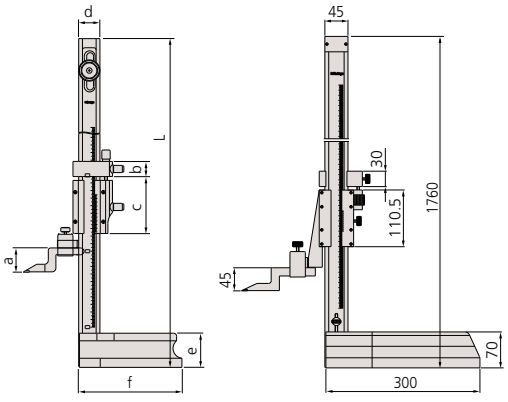

Mitutoyo

Vernier Height Gage

SERIES 506 — Light-Weight Height Gage

FEATURES

- The Light-Weight Height Gage is designed for scribing from a vertical base or for small parts.
- Satin chrome-finished scales for glare-free reading.
- Beam and slider are made of stainless steel.
- Carbide-tipped scriber is provided.

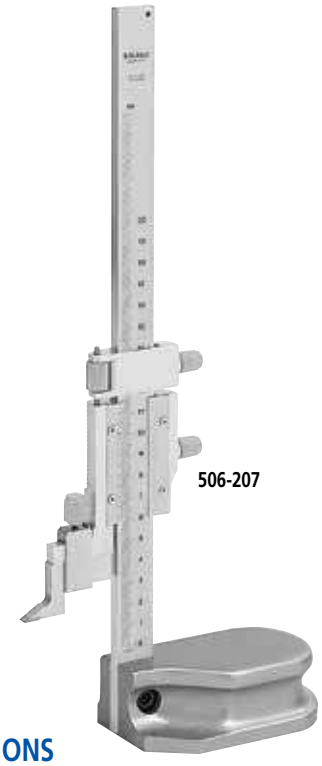

506-207

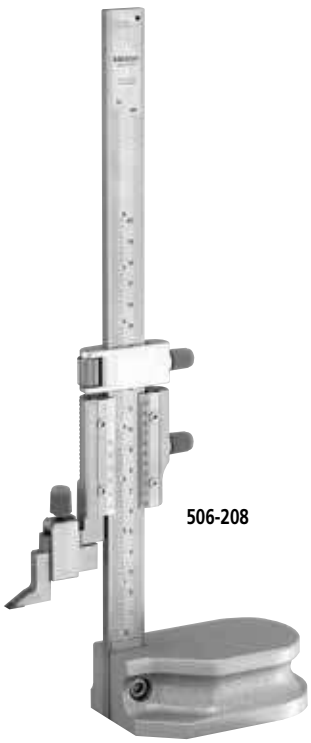

506-208

SPECIFICATIONS

Metric

Range	Order No.	Accuracy	Graduation	Mass (kg)
0 - 200mm	**506-207**	±0.03mm	0.02mm	1.4

Inch/Metric Inch model with inch/metric double scale

Range	Order No.	Accuracy	Graduation	Mass (kg)
0 - 8" / 0 - 200mm	**506-208**	±.001"	.001" / 0.02mm	1.4

DIMENSIONS

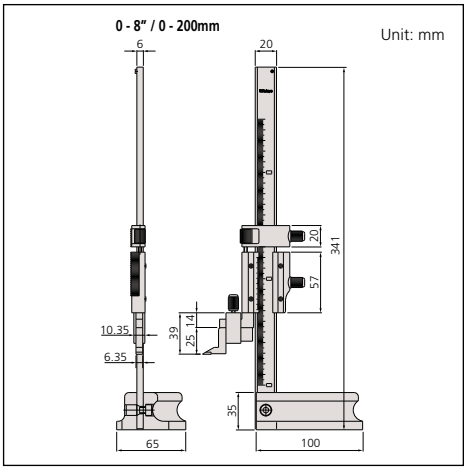

Standard Scriber Provided

Carbide-tipped scriber (**900173**) and scriber clamp (**901338**)

Dimension of scriber

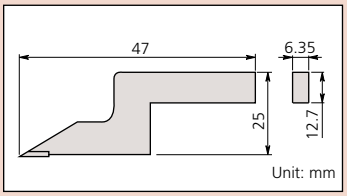

Optional Accessories

953639: Holding bar for test indicator (length: 2" / 50mm)
900322: Swivel clamp used with holding bar

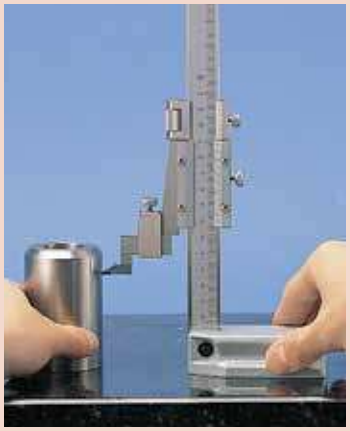

Carbide-Tipped Scriber

Optional Accessory for Height Gage

FEATURES

- Use the appropriate scriber and clamp for each height gage.

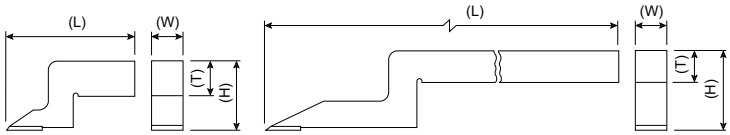

DIMENSIONS

Metric

Scriber Order No.	Clamp Order No.	Scriber Dimensions (mm)			
		Length	Height	Width	Thickness
900167	05GZA033	143	23	9	9
07GZA000	07GZA002	80	32	9	9
905200	05GZA033	150	42	9	9
900390	905008	144	45	10	16

Inch

Scriber Order No.	Clamp Order No.	Scriber Dimensions (inch)			
		Length	Height	Width	Thickness
900258	901385	2.4	1.2	.25	.5
905201	901385	5.9	1.77	.25	.5
900172	901385	5.3	1.0	.25	.5
900173	901338	1.9	1.0	.25	.5

Optional Accessories

Optional Accessories for Height Gage

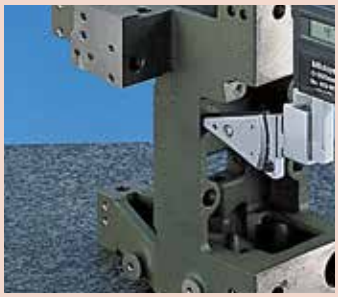

Center Master

- Allows quick measurement of center-to-center distance between holes.
- Measurable hole diameters: .040" to 1.50" / ø1 - ø38mm.

SPECIFICATIONS

Order No.	Remarks
951144	With metric-type holding bar (9x9mm cross-section)
900581	With inch-type holding bar (.25x.5" cross-section)





Depth Gage Attachment

- Attached to a height gage to measure groove and hole depth.
- Minimum hole diameter: 5.5mm
- Maximum distance from the bottom of the holding bar to the contact point: 2.95" (inch type), 80mm (metric type)
- Uses standard dial indicator points.

SPECIFICATIONS

Order No.	Remarks
900764	With metric-type holding bar (9x9mm cross-section)
900878	With inch-type holding bar (.25x.5" cross-section)



Contact Sensor

- The contact sensor eliminates errors caused by jacking-up the height gage while taking measurements. When the scriber of a height gage touches a conductive workpiece, an indicator will light up to indicate that measurement can be taken, which results in consistent height measurement.

SPECIFICATIONS

Order No.	Remarks
900872	Battery (2pcs. SR44, required) is not included

Mitutoyo

How to read

●Vernier Height gage

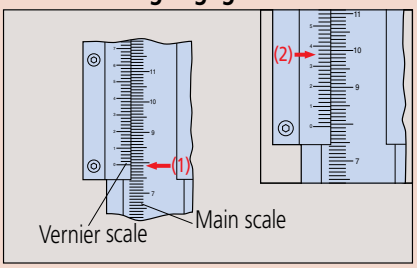

Graduation	0.02mm
(1) Main scale	79 mm
(2) Vernier	0.36 mm
Reading	79.36 mm

General notes on use of Height Gages

1. Potential causes of error

Like the caliper, the error factors involved include parallax effects, error caused by excessive measuring force due to the fact that a height gage does not conform to Abbe's Principle, and differential thermal expansion due to a temperature difference between the height gage and workpiece.
There are also other error factors caused by the structure of the height gage. In particular, the error factors related to a warped reference edge and scriber installation described below should be studied before use.

2. Reference edge (column) warping and scriber installation

Like the caliper, and as shown in the following figure, measurement errors result when using the height gage if the reference column, which guides the slider, becomes warped. This error can be represented by the same calculation formula for errors caused by nonconformance to Abbe's Principle.

$$f = h\theta = h\frac{a}{\ell}$$

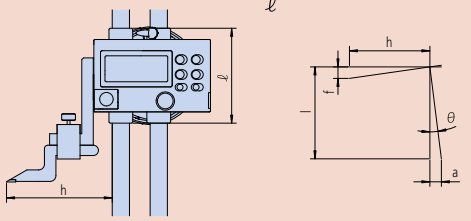

Installing the scriber (or a lever-type dial indicator) requires careful consideration because it affects the size of any error due to a warped reference column by increasing dimension h in the above formula. In other words, if an optional long scriber or lever-type dial indicator is used, the measurement error becomes larger.

Example: Effect of measuring point position
When h is 150 mm, the error is 1.5 times larger than when h is 100 mm.

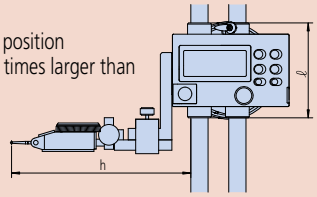

3. Lifting of the base from the reference surface

When setting the scriber height from a gauge block stack, or from a workpiece feature, the base may lift from the surface plate if excessive downwards force is used on the slider, and this results in measurement error. For accurate setting, move the slider slowly downwards while moving the scriber tip to and fro over the gauge block surface (or feature). The correct setting is when the scriber is just felt to lightly touch as it moves over the edge of the surface.
It is also necessary to make sure that the surface plate and height gage base reference surface are free of dust or burrs before use.

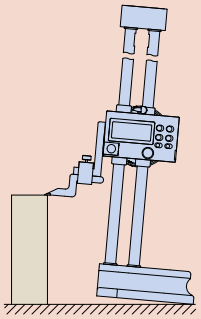

●Mechanical Digit Height gage

Measuring upwards from a reference surface

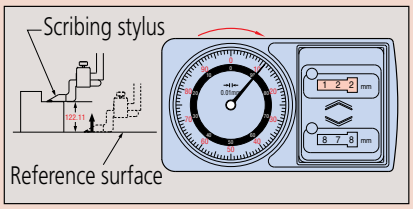

Counter	122	mm
Dial	0.11	mm
Reading	122.11	mm

Measuring downwards from a reference surface

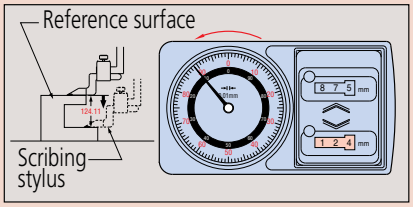

Counter	124	mm
Dial	0.11	mm
Reading	124.11	mm

4. Error due to inclination of the main scale (column)

According to JIS standards, the perpendicularity of the column reference edge to the base reference surface should be better than:

$$\left(0.01+\frac{L}{1000}\right)\text{mm}$$ L indicates the measuring length (unit: mm)

This is not a very onerous specification. For example, the perpendicularity limit allowable is 0.61 mm when L is 600 mm. This is because this error factor has a small influence and does not change the inclination of the slider, unlike a warped column.

5. Relationship between accuracy and temperature

Height gages are made of several materials. Note that some combinations of workpiece material, room temperature, and workpiece temperature may affect measuring accuracy if this effect is not allowed for by performing a correction calculation.

6. The tip of a height gage scriber is very sharp and must be handled carefully if personal injury is to be avoided.

7. Do not damage a digital height gage scale by engraving an identification number or other information on it with an electric marker pen.

8. Carefully handle a height gage so as not to drop it or bump it against anything.

Notes on using the height gage

1. Keep the column, which guides the slider, clean. If dust or dirt accumulates on it, sliding becomes difficult, leading to errors in setting and measuring.
2. When scribing, securely lock the slider in position using the clamping arrangements provided. It is advisable to confirm the setting after clamping because the act of clamping on some height gages can alter the setting slightly. If this is so, allowance must be made when setting to allow for this effect.
3. Parallelism between the scriber measuring face and the base reference surface should be 0.01 mm or better.
   Remove any dust or burrs on the mounting surface when installing the scriber or lever-type dial indicator before measurement. Keep the scriber and other parts securely fixed in place during measurement.
4. If the main scale of the height gage can be moved, move it as required to set the zero point, and securely tighten the fixing nuts.
5. Errors due to parallax error are not negligible. When reading a value, always look straight at the graduations.
6. Handling after use: Completely wipe away any water and oil. Lightly apply a thin coating of anti-corrosion oil and let dry before storage.
7. Notes on storage:
   Avoid direct sunlight, high temperatures, low temperatures, and high humidity during storage.
   If a digital height gage will not be used for more than three months, remove the battery before storage.
   If a protective cover is provided, use the cover during storage to prevent dust from adhering to the column.

CERA Caliper Checker

SERIES 515

FEATURES

- The CERA Caliper Checker is designed to inspect vernier, dial and Digimatic calipers. It is comprised of permanently wrung, high-grade CERA gage blocks in a protective casting.
- The CERA Caliper Checker also stands perpendicular to a surface for height gage inspection.
- The zirconia-based ceramic CERA measuring blocks are corrosion-resistant and dimensionally stable.



515-555

SPECIFICATIONS

Metric

Range	Order No.	Remarks (length to check)	Mass (kg)
0 - 300mm	**515-555**	Outside measurement: 20, 50, 100, 150, 200, 250, 300mm Inside measurement: 20, 50, 100, 150, 200, 250, 300mm	4.0
0 - 600mm	**515-556-2**	Outside, Inside measurement: 20, 50, 100, 150, 200, 250, 300, 350, 400, 450, 500, 550, 600mm	8.5

Inch

Range	Order No.	Remarks (length to check)	Mass (kg)
0 - 12″	**515-565**	Outside measurement: 1″, 2″, 4″, 6″, 8″, 10″, 12″ Inside measurement: 1″, 2″, 4″, 6″, 8″, 10″, 12″	4.0

DIMENSIONS

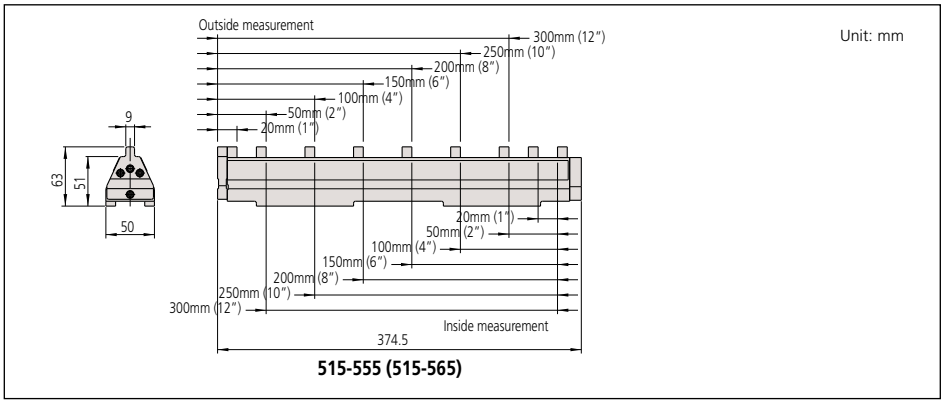

515-555 (515-565)

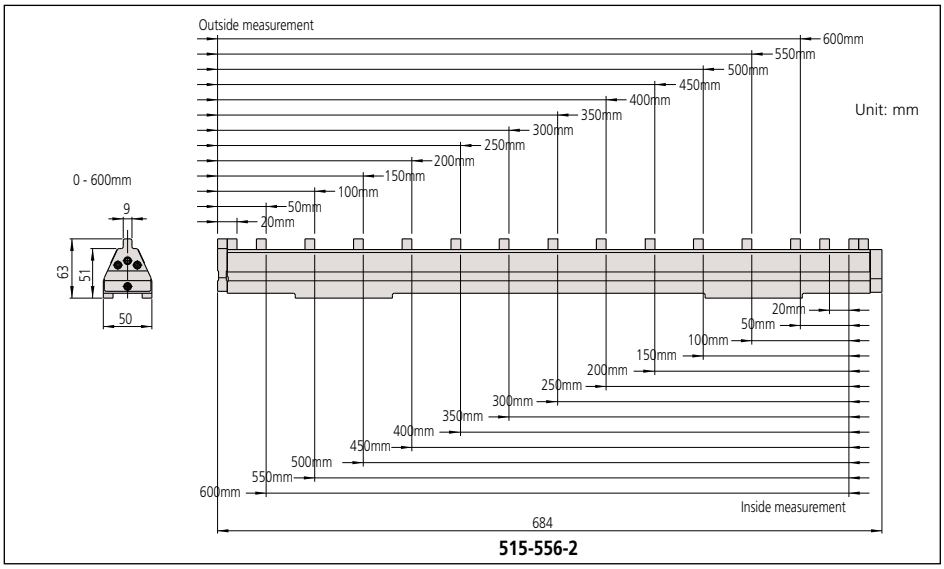

515-556-2

Technical Data

Block pitch accuracy: ±0.005mm for range up to 300mm
±.0002″ for range up to 12 ″
±0.007mm for range up to 600mm
Parallelism of blocks: 0.002mm for range up to 300mm
0.004mm for range up to 600mm

Optional Accessories

602162: Wooden case for 300mm model
602164: Wooden case for 600mm model



Used for caliper



Used for height gage

Depth Micrometer

SERIES 329, 129 — Interchangeable Rod Type

FEATURES

- ø4mm interchangeable rods, with lapped measuring end, provide a wide measuring range.
- The rod length can be adjusted in 1″ or 25mm increments.
- With ratchet stop for constant force.
- With measuring rod clamp.
- With SPC output (Series 329).
- Supplied in fitted plastic case.



329-350-30

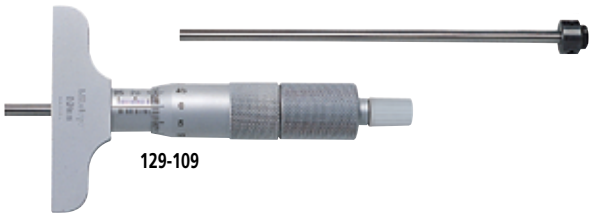

129-109

SPECIFICATIONS

Metric Digimatic model

Range	Order No.	Base Size	Rod Qty.
0 - 150mm	**329-250-30**	101.6x16mm	6 rods
0 - 300mm	**329-251-30**	101.6x16mm	12 rods

Inch/Metric Digimatic model

Range	Order No.	Base Size	Rod Qty.
0 - 6″ / 0 - 152.4mm	**329-350-30**	4″x.63″	6 rods
0 - 12″ / 0 - 304.8mm	**329-351-30**	4″x.63″	12 rods

Metric

Range	Order No.	Base Size	Rod Qty.
0 - 50mm	**129-109**	63.5x16mm	2 rods
0 - 100mm	**129-111**	63.5x16mm	4 rods
0 - 100mm	**129-115**	101.6x16mm	4 rods
0 - 150mm	**129-112**	63.5x16mm	6 rods
0 - 150mm	**129-116**	101.6x16mm	6 rods

Inch

Range	Order No.	Base Size	Rod Qty.
0 - 4″	**129-127**	2.5″x.63″	4 rods
0 - 4″	**129-131**	4″x.63″	4 rods
0 - 6″	**129-128**	2.5″x.63″	6 rods
0 - 6″	**129-132**	4″x.63″	6 rods
0 - 12″	**129-149**	2.5″x.63″	12 rods
0 - 12″	**129-150**	4″x.63″	12 rods

DIMENSIONS

Unit: mm

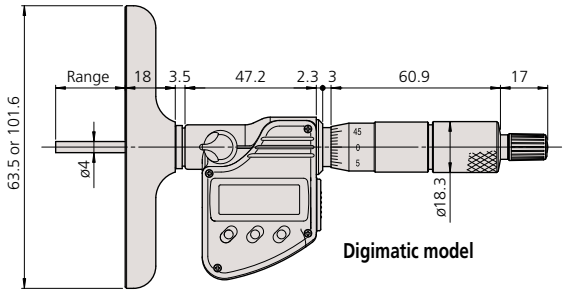

Digimatic model

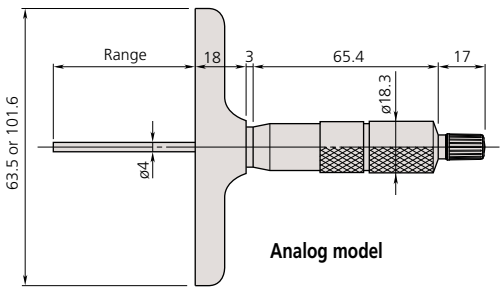

Analog model

Technical Data

Accuracy: ±.00015″/3µm for micrometer head feed
±[.00008 + (.00004xR/3)]″
R= max. measuring length (inch)
±(2+L/75)µm for interchangeable rod,
L=Max. measuring length (mm)
Resolution*: .00005″/0.001mm or 0.001mm
Graduation**: .001″ or 0.01mm
Flatness of reference surface (base):
.00005″/1.3µm for 2.5″/63.5mm wide base
.00008″/2µm for 4″/.6mm wide base
Flatness of measuring face (rod):
.000012″/0.3µm
Parallelism between reference face and measuring rod face:
[.00016 + (.00004 x R/2)]″
R=max. measuring range (inch)
(4+L/50)µm
L=Max. measuring length (mm)
Zero point error of rods:
±.0002″/4µm for 0-6″/0-150mm models
±.0003″/6µm for 0-12″/0-300mm models
Measuring rod diameter: .157″/4mm
Display*: LCD
Battery*: SR44 (1 pc.), **938882**
Battery life*: Approx. 2.4 years under normal use
*Digital models **Analog models

Function of Digimatic Model

Origin-set, Zero-setting, Data hold, Data output, inch/mm conversion (on inch/metric models only)
Function Lock, 2 Presets
Alarm: Low voltage, Counting value composition error

Optional Accessories for Digimatic Model

05CZA662: SPC cable with data switch (40″ / 1m)
05CZA663: SPC cable with data switch (80″ / 2m)



Depth Micrometer

SERIES 128

Technical Data

Accuracy: ±3µm for micrometer head feed
Graduation: .001″ or 0.01mm
Flatness of reference face: 1.3µm for 63.5mm width base,
2µm for 101.6mm width base
Flatness of measuring rod face: 0.3µm
Parallelism between reference face and measuring rod face:
(4+L/50)µm, L=Max. measuring length (mm)
Measuring rod diameter: 4mm



FEATURES

- ø4mm measuring rod.
- With measuring rod clamp.
- Carbide-tipped measuring rod model is available.
- With ratchet stop for constant force.

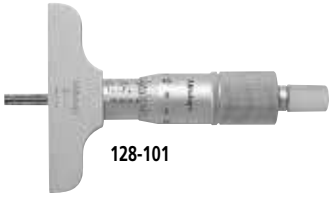

128-101

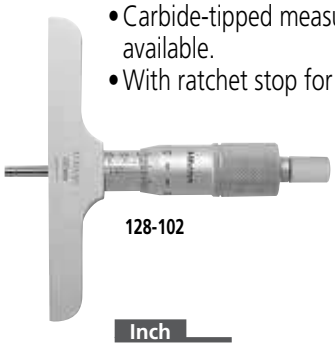

128-102

SPECIFICATIONS

Metric

Range	Order No.	Remarks (base)
0 - 25mm	**128-101**	63.5x16mm
0 - 25mm	**128-103***	63.5x16mm
0 - 25mm	**128-102**	101.6x16mm
0 - 25mm	**128-104***	101.6x16mm

*with carbide-tipped measuring rod

Inch

Range	Order No.	Remarks (base)
0 - 1″	**128-105**	2.5″x.63″
0 - 1″	**128-106**	4″x.63″

Depth Micro Checker

SERIES 515

FEATURES

- The Depth Micro Checker is designed to efficiently check the zero point of a depth micrometer.



515-570

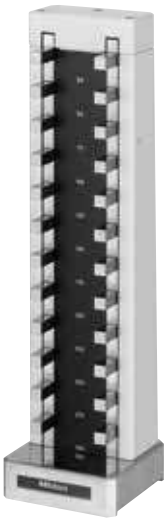

515-571

SPECIFICATIONS

Metric

Range	Order No.	Remarks (length to check)
0 - 150mm	**515-570**	25, 50, 75, 100, 125, 150mm
0 - 300mm	**515-571**	25, 50, 75, 100, 125, 150, 175, 200, 225, 250, 275, 300mm

Inch

Range	Order No.	Remarks (length to check)
0 - 6″	**515-575**	1″, 2″, 3″, 4″, 5″, 6″

Technical Data

Block pitch accuracy: ±(1+L/150)µm,
L=Length to check (mm)
Anvil block accuracy: ±0.5µm



DIMENSIONS

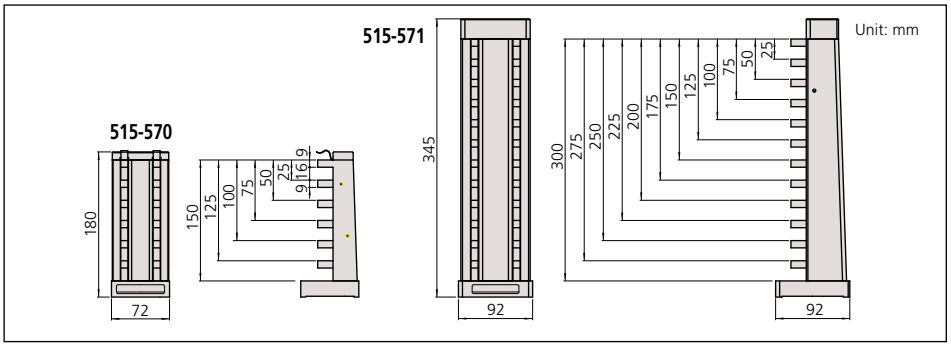

ABSOLUTE Digimatic Depth Gage

SERIES 571

FEATURES

- ABSOLUTE Digimatic Depth Gage can keep track of the origin point, once set, for the entire life of the battery.
- Base and measuring faces are hardened and micro-lapped.
- Optional wider extension base are available. (up to 450mm range models)
- With SPC data output.

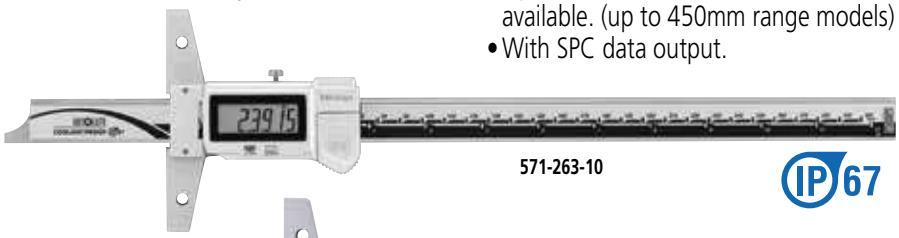

571-263-10



571-201-30

SPECIFICATIONS

Metric

Range	Order No.	Resolution	Accuracy	Mass(g)
0 - 150mm	**571-201-30**	0.01mm	±0.02mm	192
0 - 150mm	**571-251-10***	0.01mm	±0.02mm	199
0 - 200mm	**571-202-30**	0.01mm	±0.02mm	212
0 - 200mm	**571-252-10***	0.01mm	±0.02mm	219
0 - 300mm	**571-203-20**	0.01mm	±0.03mm	310
0 - 300mm	**571-253-10***	0.01mm	±0.03mm	320
0 - 450mm	**571-204-10**	0.01mm	±0.05mm	1270
0 - 600mm	**571-205-10**	0.01mm	±0.05mm	1400
0 - 750mm	**571-206-10**	0.01mm	±0.06mm	1530
0 - 1000mm	**571-207-10**	0.01mm	±0.07mm	1760

*IP67 Coolant-Proof model

Inch/Metric

Range	Order No.	Resolution	Accuracy	Mass(g)
0 - 6″ / 0 - 150mm	**571-211-30**	.0005″ / 0.01mm	±.001″	192
0 - 6″ / 0 - 150mm	**571-261-10***	.0005″ / 0.01mm	±.001″	199
0 - 8″ / 0 - 200mm	**571-212-30**	.0005″ / 0.01mm	±.001″	212
0 - 8″ / 0 - 200mm	**571-262-10***	.0005″ / 0.01mm	±.001″	219
0 - 12″ / 0 - 300mm	**571-213-10**	.0005″ / 0.01mm	±.0015″	310
0 - 12″ / 0 - 300mm	**571-263-10***	.0005″ / 0.01mm	±.0015″	320
0 - 18″ / 0 - 450mm	**571-214-10**	.0005″ / 0.01mm	±.002″	1270
0 - 24″ / 0 - 600mm	**571-215-10**	.0005″ / 0.01mm	±.002″	1400
0 - 30″ / 0 - 750mm	**571-216-10**	.0005″ / 0.01mm	±.0025	1530
0 - 40″ / 0 - 1000mm	**571-217-10**	.0005″ / 0.01mm	±.0025	1760

*IP67 Coolant-Proof model

DIMENSIONS

Unit: mm

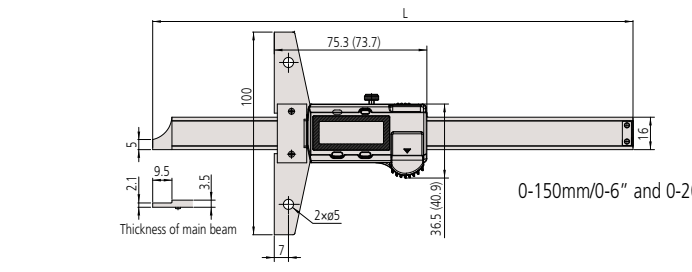

0-150mm/0-6″ and 0-200mm/0-8″

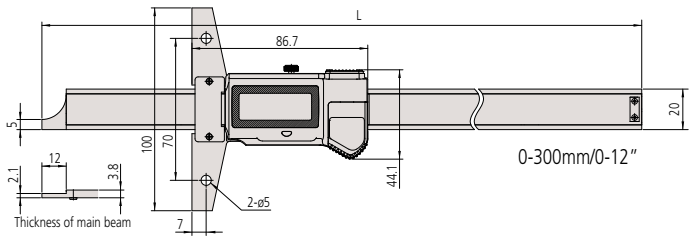

0-300mm/0-12″

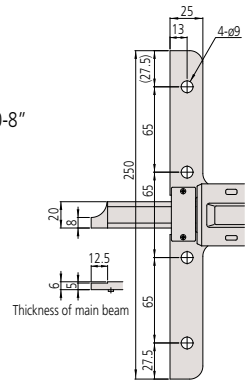

0-450mm/0-18″ and larger

Range	L	Base thickness
0 - 6″ / 0 - 150mm	237	6
0 - 8″ / 0 - 200mm	287	6
0 - 12″ / 0 - 300mm	403	6
0 - 18″ / 0 - 450mm	635	10
0 - 24″ / 0 - 600mm	785	10
0 - 30″ / 0 - 750mm	935	10
0 - 40″ / 0 - 1000mm	1200	10

ABSOLUTE®
Absolute System Patented by MITUTOYO

Technical Data

Resolution: .0005″/0.01mm or 0.01mm
Repeatability: 0.01mm
Display: LCD
Length standard: ABSOLUTE electrostatic capacitance (electromagnetic induction)* type linear encoder
Max. response speed: Unlimited
Battery: SR44 (1 pc.), **938882**
Battery life: Approx. 20,000 hours (3 years)* under normal use
Dust/Water protection level: IP67*
*Coolant-Proof models

Function

Origin-set, Zero-setting, Automatic power on/off, Data output, inch/mm conversion (on inch/metric models only)
Alarm: Low voltage, Counting value composition error

Optional Accessories

959143: Data hold unit
959149: SPC cable with data switch (40″ / 1m)
959150: SPC cable with data switch (80″ / 2m)
05CZA624: SPC cable with data switch (40″ / 1m)*
05CZA625: SPC cable with data switch (80″ / 2m)*
———: Extension base (see page D-56.)
*For IP-67 models





Measurement data output function is available with a water-resistant SPC cable.

Tire Tread Depth Gage

SERIES 571

FEATURES

- ABSOLUTE Digimatic Tread Depth Gage can keep track of the origin point, once set, for the life of the battery.
- Specially designed to measure tire tread depth.
- With SPC data output.



571-100MOT-10

DIMENSIONS

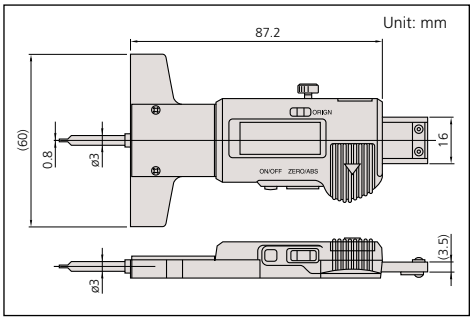

SPECIFICATIONS

Metric

Range	Order No.	Resolution	Accuracy
0 - 25mm	**571-100MOT-10**	0.01mm	±0.02mm

Inch/Metric

Range	Order No.	Resolution	Accuracy
0 - 1" / 0 - 25mm	**571-200MOT-10**	.0005" / 0.01mm	±.0005"

Technical Data

Accuracy: Refer to the list of specifications
Resolution: .0005"/0.01mm or 0.01mm
Display: LCD
Battery: SR44 (1 pc.), **938882**
Battery life: Approx. 2000 hours

Function

Origin-set, Zero-setting, Power ON/OFF,
inch/mm conversion (on inch/metric models only)
Alarm: Low voltage, Counting value composition error

Optional Accessories

959143: Data hold unit
959149: SPC cable with data switch (40" / 1m)
959150: SPC cable with data switch (80" / 2m)



ABSOLUTE Point-Type Digimatic Depth Gage

SERIES 571

FEATURES

- ABSOLUTE Digimatic Depth Gage can keep track of the origin point, once set, for the life of the battery.
- Base and measuring faces are hardened and micro-lapped.
- Optional wider extension base are available.
- With SPC data output.



571-311-10

SPECIFICATIONS

Metric

Range	Order No.	Resolution	Accuracy	Mass(g)
0-150mm	**571-301-10**	0.01mm	±0.02mm	207
0-200mm	**571-302-10**	0.01mm	±0.02mm	227

Inch/Metric

Range	Order No.	Resolution	Accuracy	Mass(g)
0-6"/0-150mm	**571-311-10**	.0005" / 0.01mm	±.001"/±0.02mm	207
0-8"/0-200mm	**571-312-10**	.0005" / 0.01mm	±.001"/±0.02mm	227

DIMENSIONS

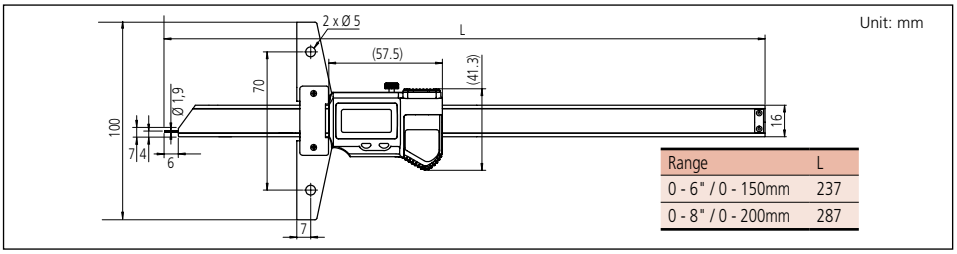

Range	L
0 - 6" / 0 - 150mm	237
0 - 8" / 0 - 200mm	287

Technical Data

Resolution: .0005"/0.01mm or 0.01mm
Repeatability: .0005"/0.01mm
Display: LCD
Length standard: ABSOLUTE electromagnetic induction-type linear encoder
Max. response speed: Unlimited
Battery: SR44 (1 pc.), **938882**
Battery life: Approx. 20,000 hours (3 years) under normal use
Dust/Water protection level: IP67

Function

Origin-set, Zero-setting, Automatic power on/off, Data output, inch/mm conversion (on inch/metric models only)
Alarm: Low voltage, Counting value composition error

Optional Accessories

05CZA624: SPC cable with data switch (40" / 1m)
05CZA625: SPC cable with data switch (80" / 2m)
———: Extension base (see page D-56.)



05CZA624



Measurement data output function is available with a water-resistant SPC cable.

Vernier Depth Gage

SERIES 527

FEATURES

- Made of hardened stainless steel.
- Base and measuring faces are hardened and micro-lapped.
- Optional wider extension base are available. (up to 450mm range models)

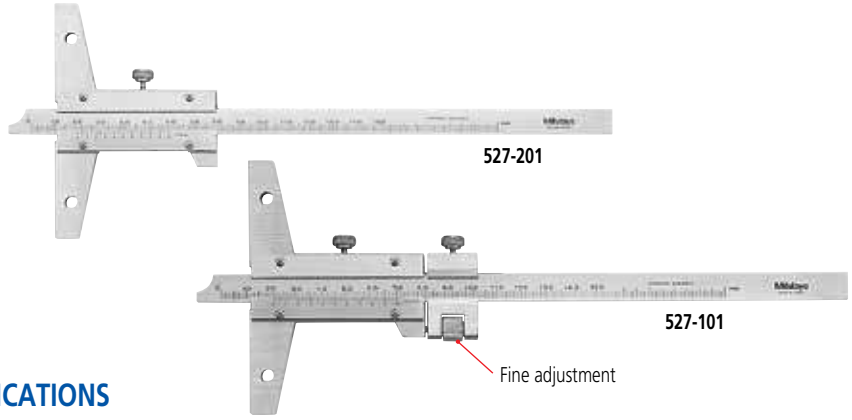

SPECIFICATIONS

Metric

Range	Order No.	Vernier reading	Accuracy	Mass (g)	Remarks
0 - 150mm	**527-201**	0.05mm	±0.05mm	240	———
0 - 150mm	**527-121**	0.02mm	±0.03mm	215	———
0 - 150mm	**527-101**	0.02mm	±0.03mm	280	with fine adjustment
0 - 200mm	**527-202**	0.05mm	±0.05mm	260	———
0 - 200mm	**527-122**	0.02mm	±0.03mm	230	———
0 - 200mm	**527-102**	0.02mm	±0.03mm	300	with fine adjustment
0 - 300mm	**527-203**	0.05mm	±0.08mm	300	———
0 - 300mm	**527-123**	0.02mm	±0.04mm	265	———
0 - 300mm	**527-103**	0.02mm	±0.04mm	350	with fine adjustment
0 - 600mm	**527-204**	0.05mm	±0.10mm	1511	———
0 - 600mm	**527-104**	0.02mm	±0.05mm	1511	with fine adjustment
0 - 1000mm	**527-205**	0.05mm	±0.15mm	1880	———
0 - 1000mm	**527-105**	0.02mm	±0.07mm	1880	with fine adjustment

Inch

Range	Order No.	Vernier reading	Accuracy	Mass (g)	Remarks
0 - 6″	**527-111**	.001″	±.001″	280	with fine adjustment
0 - 8″	**527-112**	.001″	±.001″	300	with fine adjustment
0 - 12″	**527-113**	.001″	±.0015″	350	with fine adjustment
0 - 24″	**527-114**	.001″	±.002″	1511	with fine adjustment
0 - 40″	**527-115**	.001″	±.003″	1880	with fine adjustment

DIMENSIONS

Unit: mm

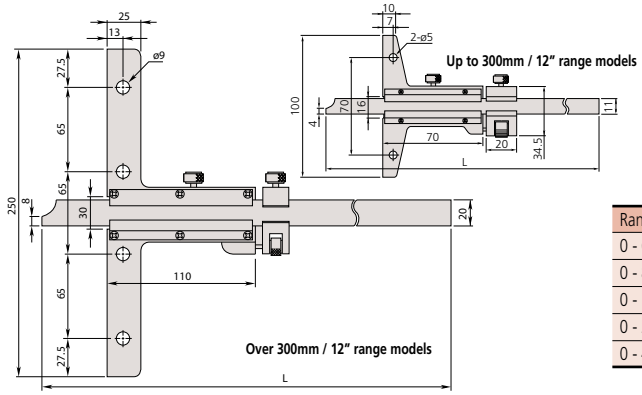

Range	L
0 - 6″ / 0 - 150mm	260
0 - 8″/ 0 - 200mm	310
0 - 12″ / 0 - 300mm	410
0 - 24″/ 0 - 600mm	800
0 - 40″/ 0 - 1000mm	1200

Technical Data

Graduation: .001″ or 0.05mm, 0.02mm

Optional Accessories

———: Extension base (see page D-56.)

Vernier Depth Gage

SERIES 527 — Hook-End Type

Technical Data

Graduation: 0.05mm or 0.02mm
Base size: 100x6.5mm (WxT)

Optional Accessory

———: Extension base (see page D-56.)

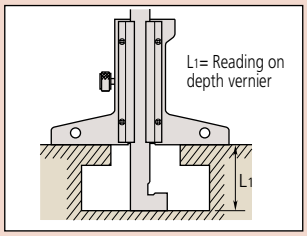

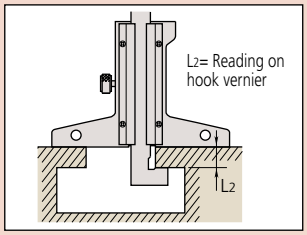

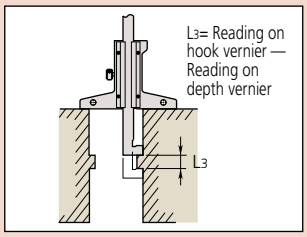

FEATURES

- The end of the main scale is hook-shaped to allow depth and thickness measurements of a projected portion or lip in a hole, in addition to standard depth measurement.
- Fine adjustment models are available.
- Optional wider extension bases are available.

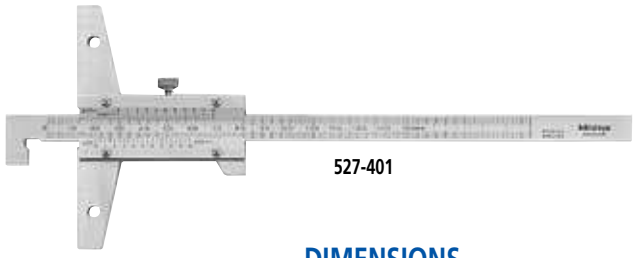

527-401

SPECIFICATIONS

Metric

Range	Order No.	Vernier reading	Accuracy	Mass (g)
0 - 150mm	**527-401**	0.05mm	±0.05mm	240
0 - 200mm	**527-402**	0.05mm	±0.05mm	240
0 - 300mm	**527-403**	0.05mm	±0.08mm	270

Metric with fine adjustment

Range	Order No.	Vernier reading	Accuracy	Mass (g)
0 - 150mm	**527-411**	0.02mm	±0.03mm	280
0 - 200mm	**527-412**	0.02mm	±0.03mm	300
0 - 300mm	**527-413**	0.02mm	±0.04mm	350

DIMENSIONS

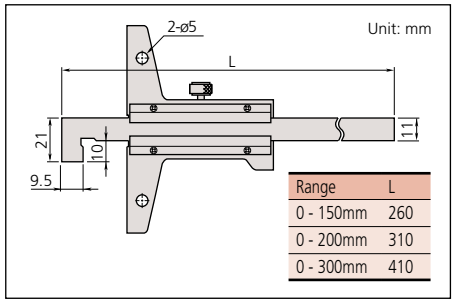

Range	L
0 - 150mm	260
0 - 200mm	310
0 - 300mm	410

ABSOLUTE Digimatic Depth Gage

SERIES 571 — Hook-End Type

FEATURES

- ABSOLUTE Digimatic Depth Gage can keep track of the origin point, once set, for the life of the battery.
- Base and measuring faces are hardened and micro-lapped.
- Optional wider extension bases are available.
- With SPC data output.

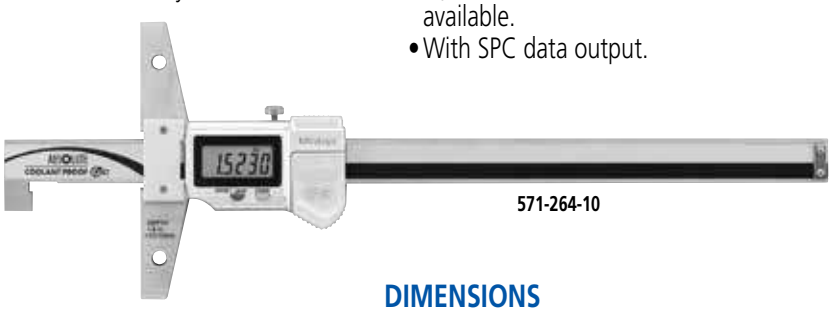

571-264-10

Technical Data

Resolution: .0005"/0.01mm
Repeatability: .0005"/0.01mm
Display: LCD
Length standard: ABSOLUTE electrostatic capacitance (electromagnetic induction)* type linear encoder
Max. response speed: Unlimited
Battery: SR44 (1 pc.), **938882**
Battery life: Approx. 20,000 hours (3 years)* under normal use
Dust/Water protection level: IP67

Function

Origin-set, Zero-setting, Automatic power on/off, Data output, inch/mm conversion (on inch/metric models only)
Alarm: Low voltage, Counting value composition error

Optional Accessories

05CZA624: SPC cable with data switch (40" / 1m)
05CZA625: SPC cable with data switch (80" / 2m)
———: Extension base (see page D-56.)

SPECIFICATIONS

Inch/Metric

Range	Order No.	Resolution	Accuracy	Mass (g)
0 - 6" / 0 - 150mm	**571-264-10**	.0005" / 0.01mm	±.0015"	578
0 - 8" / 0 - 200mm	**571-265-10**	.0005" / 0.01mm	±.0015"	598

DIMENSIONS

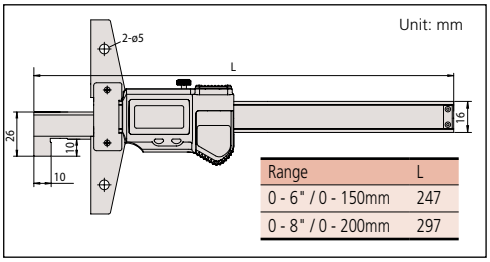

Range	L
0 - 6" / 0 - 150mm	247
0 - 8" / 0 - 200mm	297

Dial Depth Gage

SERIES 527 — With Fine Adjustment

FEATURES

- Easier and faster reading of dial.
- Made of hardened stainless steel.
- Base and measuring faces are hardened and micro-lapped.
- Optional wider extension base are available.

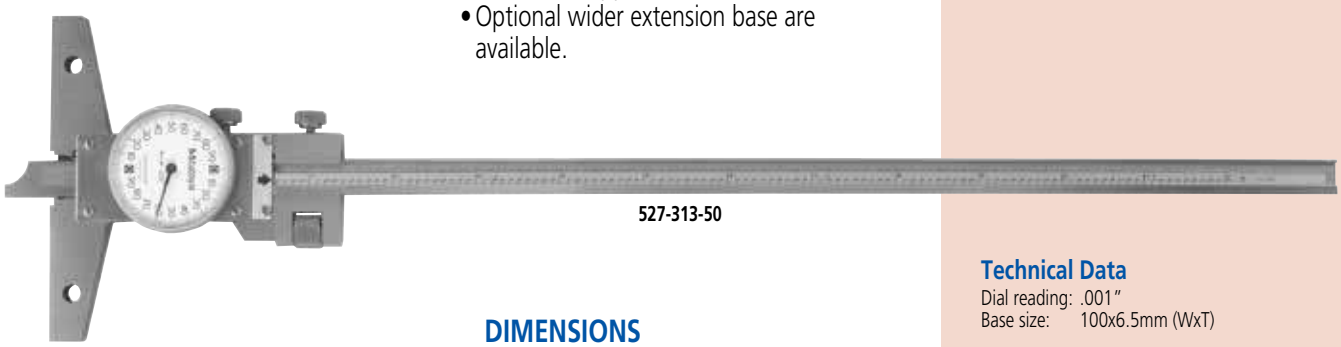

527-313-50

Technical Data

Dial reading: .001″
Base size: 100x6.5mm (WxT)

SPECIFICATIONS

Inch

Range	Order No.	Dial reading	Accuracy	Mass (g)
0 - 6″	**527-311-50**	.001″	±.001″	280
0 - 8″	**527-312-50**	.001″	±.001″	300
0 - 12″	**527-313-50**	.001″	±.0015″	340

DIMENSIONS

Unit: mm

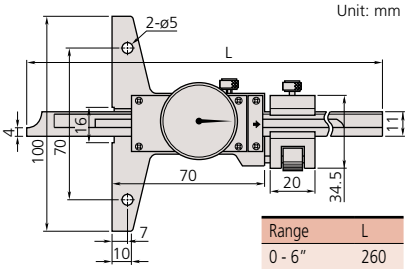

Range	L
0 - 6″	260
0 - 8″	310
0 - 12″	410

Extension Bases

Optional Accessory for Depth Gage

FEATURES

- Attached to the base (reference face) plate of a depth gage to extend its span.
- These extension base cannot be attached to 0-24″ and 0-40″, 0-600mm, 0-1000mm, range models.



900372

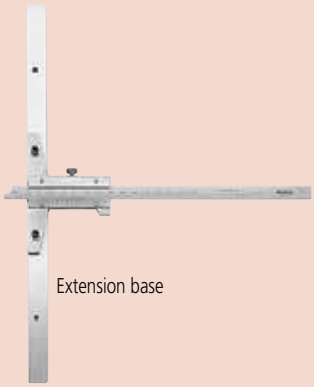

Extension base

SPECIFICATIONS

Metric

Size	Order No.	Remarks (dimension a, b / n)	
180mm	**900370**	70mm, 55mm	2
260mm	**900371**	35mm, 60mm	5
320mm	**900372**	70mm, 55mm	4

Inch

Size	Order No.	Remarks (dimension a, b / n)	
7″	**900367**	2.76″, 2.17″	2
10″	**900368**	1.38″, 2.36″	5
12″	**900369**	2.76″, 2.17″	4

DIMENSIONS

Unit: mm

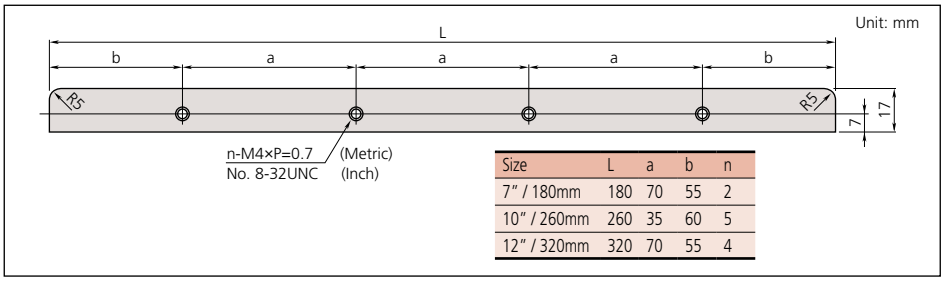

Size	L	a	b	n
7″ / 180mm	180	70	55	2
10″ / 260mm	260	35	60	5
12″ / 320mm	320	70	55	4

Attaching the extension base

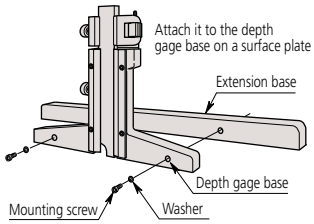

ABSOLUTE Digimatic/Dial Depth Gage

SERIES 547, 7

SPC

ABSOLUTE®
Absolute System Patented by MITUTOYO

Technical Data

Accuracy: Refer to the list of specifications
Resolution*: .0005"/0.01mm or 0.001mm, 0.01mm, .00005"/0.001mm
Dial reading**: .001" or 0.01mm
Flatness of base face: 5µm
Contact point: Carbide-tipped ball point or needle point (**7210**, **7222**)
Measuring force: 1.4N, 1.5N (digital model), 2.5N (**7213**, **7214**, **7217S**, **7218S**)
Display*: LCD
Battery*: SR44 (1 pc.), **938882**
Battery life*: Approx. 3.5 years under normal use
*Digital models **Dial models

Technical Data of Dial Mode

Accuracy: Refer to the list of specifications
Dial reading: .001" or 0.01mm
Flatness of base face: 5µm or 2µm
Contact point: Carbide-tipped ball point (needle point: **7210**, **7222**)
Measuring force: 1.4N (2.5N: **7213**, **7214**, **7217S**, **7218S**)

Function of Digimatic Model

Origin-set, Zero-setting, Data hold, Data output, inch/mm conversion (on inch/metric models only)
Alarm: Low voltage, Counting value composition error

Optional Accessories for Digimatic Model

905338: SPC cable (40" / 1m)
905409: SPC cable (80" / 2m)
139167: .5" Extension Rod
301655: 1" Extension Rod
301657: 2" Extension Rod
301659: 4" Extension Rod
303611: 10mm Extension Rod
303612: 20mm Extension Rod
303613: 30mm Extension Rod
303614: 100mm Extension Rod

Base Only (3/8" dia. hole)

Part No.	length	remark
902164:	2.5"	**7217S, 7237, 547-217S, 547-257S**
902165:	4"	**7218S, 7238, 547-218S, 547-258S**

FEATURES

- ABSOLUTE Digimatic Depth Gage can keep track of the origin point, once set, for the life of the battery. (Series 547)
- Wide probing range is available with the supplied extension rod.
- Bottom surface of the base is hardened, ground and lapped for highest degree of flatness.
- Designed with a back-plunger type dial indicator for upward facing readings. (**7231**, **7237, 7238**)
- With SPC data output. (Series 547)



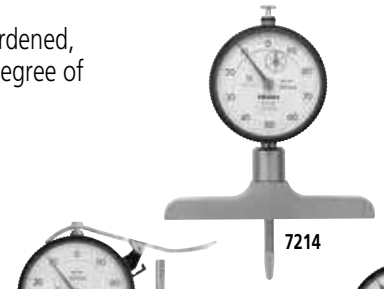





SPECIFICATIONS

Metric Digimatic model

Range	Order No.	Resolution	Stroke	Accuracy	Extension rod	Base (WxT)	Flatness
0 - 200mm	**547-211**	0.01mm	12mm	±0.02mm	5 pcs. (10, 20, 30, 30, 100mm)	63.5x16mm	5µm
0 - 200mm	**547-212**	0.01mm	12mm	±0.02mm	5 pcs. (10, 20, 30, 30, 100mm)	101.6x16mm	5µm
0 - 200mm	**547-251**	0.001mm	12mm	±0.005mm	5 pcs. (10, 20, 30, 30, 100mm)	63.5x16mm	2µm
0 - 200mm	**547-252**	0.001mm	12mm	±0.005mm	5 pcs. (10, 20, 30, 30, 100mm)	101.6x16mm	2µm

0.01mm graduation 0.001mm graduation

Inch/Metric Digimatic model

Range	Order No.	Resolution	Stroke	Accuracy	Extension rod	Base (WxT,)	Flatness
0 - 8" / 0-200mm	**547-217S**	.0005" / 0.01mm	.5"	±.001"	4 pcs. (.5", 1", 2", 4")	2.5"x.63"	.0002"
0 - 8" / 0-200mm	**547-218S**	.0005" / 0.01mm	.5"	±.001"	4 pcs. (.5", 1", 2", 4")	4"x.63"	.0002"
0 - 8" / 0-200mm	**547-257S**	.00005" / 0.001mm	.5"	±.0003"	4 pcs. (.5", 1", 2", 4")	2.5"x.63"	.00008"
0 - 8" / 0-200mm	**547-258S**	.00005" / 0.001mm	.5"	±.0003"	4 pcs. (.5", 1", 2", 4")	4"x.63"	.00008"

.005"/0.01mm graduation .00005"/0.001mm graduation

Metric Dial Type

Range	Order No.	Graduation	Stroke	Accuracy	Extension rod	Base (WxT)	Flatness
0 - 10mm	**7210***	0.01mm	10mm	±0.015mm	——	40x16mm,	5µm
0 - 200mm	**7211**	0.01mm	10mm	±0.015mm	5 pcs. (10, 20, 30, 30, 100mm)	63.5x16mm	5µm
0 - 200mm	**7212**	0.01mm	10mm	±0.015mm	5 pcs. (10, 20, 30, 30, 100mm)	101.6x16mm	5µm
0 - 210mm	**7213**	0.01mm	30mm	±0.03mm	3 pcs. (30, 60, 90mm)	63.5x16mm	5µm
0 - 210mm	**7214**	0.01mm	30mm	±0.03mm	3 pcs. (30, 60, 90mm)	101.6x16mm	5µm
0 - 200mm	**7220**	0.01mm	10mm	±0.015mm	5 pcs. (10, 20, 30, 30, 100mm)	100x18mm	5µm
0 - 200mm	**7221**	0.01mm	10mm	±0.015mm	5 pcs. (10, 20, 30, 30, 100mm)	150x18mm	5µm
0 - 10mm	**7222***	0.01mm	10mm	±0.015mm	5 pcs. (10, 20, 30, 30, 100mm)	ø16mm	5µm
0 - 10mm	**7223**	0.01mm	10mm	±0.015mm	5 pcs. (10, 20, 30, 30, 100mm)	ø25mm	5µm
0 - 10mm	**7224**	0.01mm	10mm	±0.015mm	5 pcs. (10, 20, 30, 30, 100mm)	ø40mm	5µm
0 - 200mm	**7231**	0.01mm	5mm	±0.015mm	5 pcs. (10, 20, 30, 30, 100mm)	63.5x16mm	5µm

*with needle probe

Inch Dial Type

Range	Order No.	Graduation	Stroke	Accuracy	Extension rod	Base (WxT)	Flatness
0 - 8"	**7217S**	.001"	1"	±.002"	4 pcs. (.5", 1", 2", 4")	2.5"x.63"	.0002"
0 - 8"	**7218S**	.001"	1"	±.002"	4 pcs. (.5", 1", 2", 4")	4"x.63"	.0002"
0 - 8"	**7237T**	.001"	.2"	±.002"	4 pcs. (.5", 1", 2", 4")	2.5"x.63"	.0002"
0 - 8"	**7238T**	.001"	.2"	±.002"	4 pcs. (.5", 1", 2", 4")	4"x.63"	.0002"

Mitutoyo

DIMENSIONS

Unit: mm

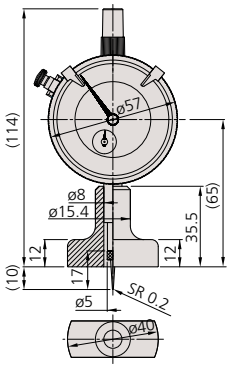

7210

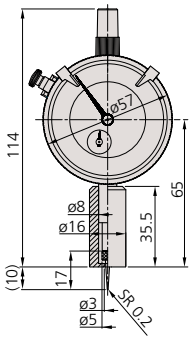

7222

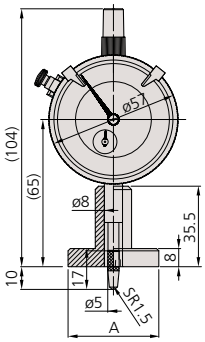

7223 A= ø25mm
7224 A= ø40mm

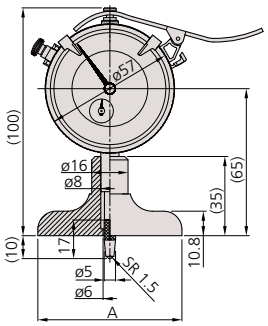

7211 A= 63.5mm
7212 A= 101.6mm

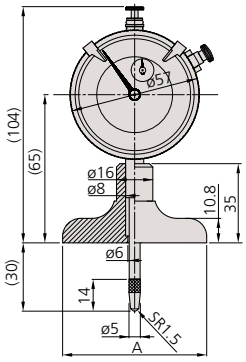

7213, **7217S** A= 63.5mm
7214, **7218S** A= 101.6mm

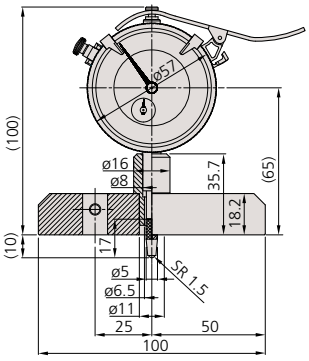

7220

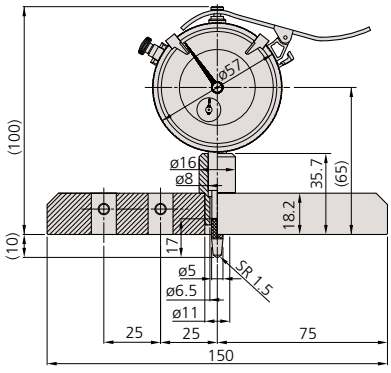

7221

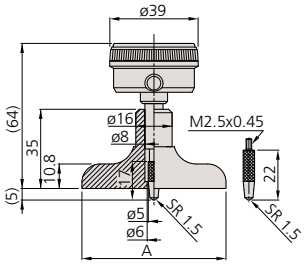

7237T, 7231 A=63.5mm
7238T A=101.6mm

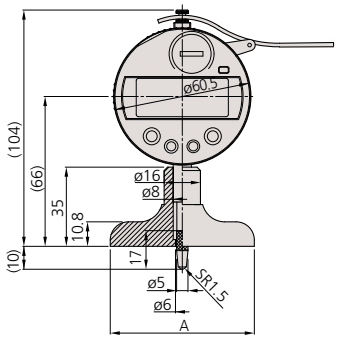

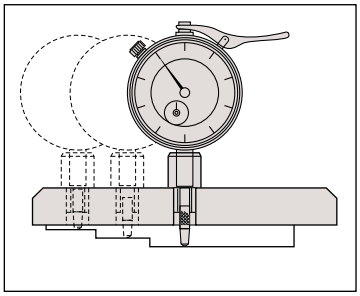

547-211, **547-251**, **547-217S**, **547-257S** A= 63.5mm
547-212, **547-252**, **547-218S**, **547-258S** A= 101.6mm



E

Small Tool Instruments and Reference Gages



Gage Blocks



Height Master



Reference Gages



Granite Surface Plates & Bench Comparator



CERA/Steel Combination Gage Block Sets



Step Master



ZERO CERA BLOCK



Ceramic Straight Master

INDEX

Gage Blocks	E-2-4
Metric Rectangular Gage Block Set	E-5,6
Inch Rectangular Gage Block Set	E-7
Micrometer Inspection Gage Block Sets	E-8
Bore Gage Calibration Kit	E-8
Individual Metric Rectangular Gage Block	E-9,10
Individual Inch Rectangular Gage Block	E-11
Rectangular Gage Block with CTE	E-12
Rectangular Gage Block Accessories	E-13-15
Metric Square Gage Block Set	E-16
Inch Square Gage Block Set	E-17
Individual Metric Square Gage Block	E-18
Individual Inch Square Gage Block	E-19
Square Gage Block Accessories	E-20,21
Ceraston	E-22
Maintenance Kit for Gage Block	E-22
Step Master	E-23
Made-to-Order Block & Reference	E-23
Gage Block Comparator GBCD-250	E-24
Gage Block Comparator GBCD-100A	E-24
Height Masters	
Height Master	E-25
Digital Height Master	E-26
Riser Blocks	E-27
Auxiliary Block Kit	E-27
Universal Height Master	E-28
High-Accuracy Check Master HMC-H	E-29
CERA Straight Master SM-C	E-30
Square Master	E-31
Reference Gages	
Standard Scales	E-32
Working Standard Scales	E-32
High-Precision Square	E-33
Spring Dividers and Calipers	E-33
Combination Square Set	E-34
Steel Rules	E-35,36
Semi-Flexible Rules	E-36
Thickness Gages	E-37
Precision Levels	E-37
Digital Universal Protractor	E-38
Universal Bevel Protractor	E-39
Bevel Protractor	E-39
Radius Gages	E-40
Pitch Gages	E-40
Radius Gages-Sets	E-41
Digital Protractor	E-42
Digital Hand Tachometers	E-43
Bench Center	E-44
Granite Surface Plate	
Granite Surface Plate Accessories	E-44
Black Granite Surface Plate	E-45
Steel Stands	E-46

Mitutoyo

Gage Block

SERIES 516

FEATURES

Precision gage blocks are the primary standards vital to dimensional quality control in the manufacture of parts. Mitutoyo offers a complete selection of gage blocks available in a choice of rectangular or square, metric or inch and steel or CERA (ceramic) types.

Accuracy

Mitutoyo gage blocks guarantee such a high accuracy that users can use them without anxiety. Mitutoyo has established a traceability system for our measurement products, up to the Metrology Management Center of the National Institute of Advanced Industrial Science and Technology (AIST), and we have been certified by the Japanese government as an accredited laboratory.

Wringing

The lapping technique is one of Mitutoyo's specialties. Our advanced lapping technique, developed for more than a half century, allows us to achieve the best flatness and surface roughness needed for gage blocks.

Abrasion Resistance and Dimensional Stability

High-carbon, high-chrome steel is employed to sufficiently satisfy a variety of material characteristics required for gage blocks. A high degree of hardness, obtained by our heat treatment technology, as well as methodically repeated heat treatment, have successfully reduced deterioration change over time.

CERA Blocks

CERA blocks, made of ceramic materials with superior surface quality, were developed by Mitutoyo's ultra-precision machining techniques and solve problems commonly associated with steel gage blocks.



1. Corrosion-Resistant
Anti-corrosion treatment is not required when handled normally (i.e. with fingers), resulting in simple maintenance and storage.

2. No Burrs Caused by Dents, etc.
Since the CERA Block is very hard it will not scratch and is highly resistant to burrs. If a burr is formed, it can easily be removed with a ceramic deburring stone (Ceraston).

3. Abrasion Resistant
CERA Blocks have 10 times the abrasion resistance of steel gage blocks.

4. Dimensional Stability
CERA Blocks are free from dimensional change over time.

5. Marking
The black characters, indicating the nominal length, are inscribed by laser and are clearly visible against the white surface of the block.

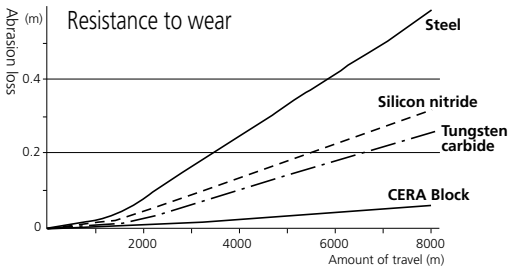

Selecting Gage Blocks

- Select gage blocks in accordance with the combination range required. If a large length is required, add a long block set.
- Select gage blocks in accordance with the minimum length step required. Add wear block sets if necessary.
- If a set containing a large number of gage blocks is selected, the number of combination gage blocks required for a length is reduced and the number of combinations is increased. The accuracy will be retained and damage will be reduced.
- The specific gage block set for micrometer inspection and caliper inspection is available.
- If using only one length repeatedly, it is a good idea to purchase discrete gage blocks.
- The 2mm-based gage blocks, which take the base of the minimum length step as 2mm, are easy to handle and will not warp, as compared to the 1mm-based gage blocks.

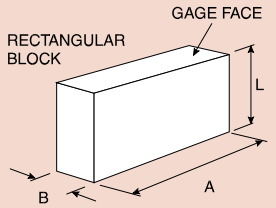

Rectangular Block

Gage Size	Face Width (A)	Face Depth (B)
Up to 2"	1.181"	.355"
Over .2" up to 40"	1.378"	.355"
Up to 10mm	30mm	9mm
Over 10mm up to 1000mm	35mm	9mm

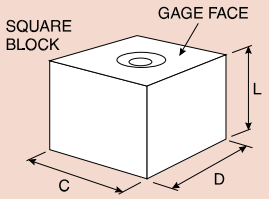

Square Block

Gage Size	Face Width (C)	Face Depth (D)
Inch (up to 40")	.95"	.95"
Metric (up to 1000mm)	24.1mm	24.1mm

Grade and Application

Refer to the following table to select the gage block grade according to usage.

	Applications	Grade
Workshop use	• Mounting tools and cutters	AS-1 or AS-2
	• Manufacturing gages • Calibrating instruments	0 or AS-1
Inspection use	• Inspecting mechanical parts, tools, etc.	0 or AS-1
	• Checking the accuracy of gages • Calibrating instruments	00 or 0
Calibration use	• Checking the accuracy of gage blocks for workshop • Checking the accuracy of gage blocks for inspection • Checking the accuracy of instruments	K or 00
Reference use	• Checking the accuracy of gage blocks for calibration • For academic research	K

Grade AS-1:
These gage blocks are intended for shop-floor use to set and calibrate fixtures, as well as precision instruments.

Grade 0:
This grade is used within an inspection area to verify the accuracy of plug and snap gages, as well as for setting electronic measuring devices.

Grade 00:
These higher accuracy gages are intended for use within a controlled environment by skilled inspection staff. Mainly used as reference standards for setting high-precision measuring equipment and for the calibration of lower grade gage blocks.

Grade K:
Gage blocks of this accuracy are intended for use within a temperature-controlled inspection room or calibration laboratory. They should be used as masters with certificates against other gage blocks which are calibrated by comparison.

Combination of a Required Length

Multiple combinations of gage blocks can be used to make a required length. Care should be exercised in the following points.

1. Use as few gage blocks as possible to obtain the required length. (Select thick gage blocks whenever possible.)
2. Select gage blocks starting with the one that has the least significant digit required, and then work up to ones with more significant digits.
3. There are multiple combinations for the integer part of a length. To prevent wear as much as possible, do not always use the same gage blocks.

Example combination
Required length = 45.6785mm

For the 1mm-based gage block set (112 pcs.)

1.0005
1.008
1.17
17.5
\+ 25
45.6785mm

For the 2mm-based gage block set (112 pcs.)

2.0005
2.008
2.17
14.5
\+ 25
45.6785mm

6. Anti-magnetic Nature Keeps Away Steel Powders

7. High Wringing Force

An even, dense tissue can maintain a strong wringing force.



8. Material of CERA block

Property \ Material	CERA Block (ZrO_2)	Steel (Fe)	Carbide (WC-Co)	Silicon nitride (Si_3N_4)
Hardness (HV)	1350	800	1650	1500
Coefficient of thermal expansion (10^{-6}/K)	9.3±0.5	10.8±0.5	5.5±1.0	2
Flexural strength by 3-point bending (MPa)	1270	1960	1960	580
Fracture toughness K1c (MPa•$m^{1/2}$)	7	120	12	6.5
Young's Modulus x104 (MPa)	20.6	20.6	61.8	28.4
Poisson's Ratio	0.3	0.3	0.2	0.3
Specific gravity	6.0	7.8	14.8	3.2
Thermal conductivity (W/m•k)	2.9	54.4	79.5	16.7

9. Closest Expansion Coefficient to Steel

The thermal expansion coefficient of a CERA Block is similar to that of a steel gage block.

10. Highly Resistant Against Drops and Other Shocks

The CERA block material is one of the toughest ceramics materials. It is extremely difficult to crack under normal use.

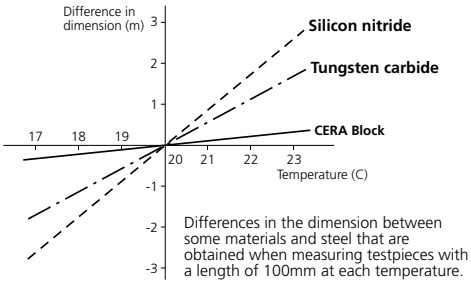

Differences in the dimension between some materials and steel that are obtained when measuring testpieces with a length of 100mm at each temperature.

Features of Square Gage Blocks

1. Perfect wringing is possible using the center hole.

After wringing the square gage blocks, an optional tie rod can be inserted through the center hole to fix the blocks using a screw.

2. A height reference standard can easily be made.

A precision height reference standard can be made easily and inexpensively using accessories such as the plain jaw and block base.

3. A dedicated inspection jig can be easily made.

A dedicated inspection jig for periodic inspection of instruments can be made easily and inexpensively.

4. A wide measuring surface with cross section dimensions of [24.1 x 24.1mm / .95 x .95"] is available.

A square gage block can retain stable orientation both longitudinally and laterally. A wide range of application measurements can be made, including cutting tool positioning, angle measurement with a sine bar, taper measurement with a roller, and inspection of depth micrometers.

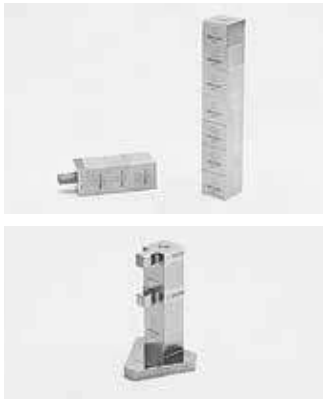

Long and Ultra-Thin Gage Blocks

Mitutoyo offers extra thin gage blocks from 0.10 mm to 0.99 mm (increments of 0.01 mm), as well as long gage blocks up to 1,000 mm as standard products.

Gage Block
SERIES 516

Accuracies of Mitutoyo Gage Blocks
All Mitutoyo gage blocks meet or exceed all known specifications. The flatness, parallelism and surface finish necessary to achieve the required accuracies are the same as or better than government requirements.

ASME (American Society of Mechanical Engineers) Deviations and Tolerance on Length for Metric and inch Gage Blocks: ASME B89.1.9-2002 (USA)

Nominal Length Range l n in inches	Calibration Grade K		Grade 00		Grade 0		Grade AS-1		Grade AS-2	
	Limit Deviations of Length at any Point From Nominal Length ± te µin.	Tolerance for the Variation In Length tv µin.	Limit Deviations of Length at any Point From Nominal Length ± te µin.	Tolerance for the Variation In Length tv µin.	Limit Deviations of Length at any Point From Nominal Length ± te µin.	Tolerance for the Variation In Length tv µin.	Limit Deviations of Length at any Point From Nominal Length ± te µin.	Tolerance for the Variation In Length tv µin.	Limit Deviations of Length at any Point From Nominal Length ± te µin.	Tolerance for the Variation In Length tv µin.
$l_n \le .05$	12	2	4	2	6	4	12	6	24	12
$.05 \le l_n \le .4$	10	2	3	2	5	4	8	6	18	12
$.45 \le l_n \le 1$	12	2	3	2	6	4	12	6	24	12
$1 \le l_n \le 2$	16	2	4	2	8	4	16	6	32	12
$2 \le l_n \le 3$	20	2	5	3	10	4	20	6	40	14
$3 \le l_n \le 4$	24	3	6	3	12	5	24	8	48	14
$4 \le l_n \le 5$	32	3	8	3	16	5	32	8	64	16
$5 \le l_n \le 6$	32	3	8	3	16	5	32	8	64	16
$6 \le l_n \le 7$	40	4	10	4	20	6	40	10	80	16
$7 \le l_n \le 8$	40	4	10	4	20	6	40	10	80	16
$8 \le l_n \le 10$	48	4	12	4	24	6	48	10	104	18
$10 \le l_n \le 12$	56	4	14	4	28	7	56	10	112	20
$12 \le l_n \le 16$	72	5	18	5	36	8	72	12	144	20
$16 \le l_n \le 20$	88	6	20	6	44	10	88	14	176	24
$20 \le l_n \le 24$	104	6	25	6	52	10	104	16	200	28
$24 \le l_n \le 28$	120	7	30	7	60	12	120	18	240	28
$28 \le l_n \le 32$	136	8	34	8	68	12	136	20	260	32
$32 \le l_n \le 36$	152	8	38	8	76	14	152	20	300	36
$36 \le l_n \le 40$	160	10	40	10	80	16	168	24	320	40

Nominal Length Range l n in mm	Calibration Grade K		Grade 00		Grade 0		Grade AS-1		Grade AS-2	
	Limit Deviations of Length at any Point From Nominal Length ± te µm	Tolerance for the Variation In Length tv µm	Limit Deviations of Length at any Point From Nominal Length ± te µm	Tolerance for the Variation In Length tv µm	Limit Deviations of Length at any Point From Nominal Length ± te µm	Tolerance for the Variation In Length tv µm	Limit Deviations of Length at any Point From Nominal Length ± te µm	Tolerance for the Variation In Length tv µm	Limit Deviations of Length at any Point From Nominal Length ± te µm	Tolerance for the Variation In Length tv µm
$l_n \le 0.5$	0.30	0.05	0.10	0.05	0.14	0.10	0.30	0.16	0.60	0.30
$0.5 \le l_n \le 10$	0.20	0.05	0.07	0.05	0.12	0.10	0.20	0.16	0.45	0.30
$10 \le l_n \le 25$	0.30	0.05	0.07	0.05	0.14	0.10	0.30	0.16	0.60	0.30
$25 \le l_n \le 50$	0.40	0.06	0.10	0.06	0.20	0.10	0.40	0.18	0.80	0.30
$50 \le l_n \le 75$	0.50	0.06	0.12	0.06	0.25	0.12	0.50	0.18	1.00	0.35
$75 \le l_n \le 100$	0.60	0.07	0.15	0.07	0.30	0.12	0.60	0.20	1.20	0.35
$100 \le l_n \le 150$	0.80	0.08	0.20	0.08	0.40	0.14	0.80	0.20	1.60	0.40
$150 \le l_n \le 200$	1.00	0.09	0.25	0.09	0.50	0.16	1.00	0.25	2.00	0.40
$200 \le l_n \le 250$	1.20	0.10	0.30	0.10	0.60	0.16	1.20	0.25	2.40	0.45
$250 \le l_n \le 300$	1.4	0.10	0.35	0.10	0.70	0.18	1.40	0.25	2.80	0.50
$300 \le l_n \le 400$	1.80	0.12	0.45	0.12	0.90	0.20	1.80	0.30	3.60	0.50
$400 \le l_n \le 500$	2.20	0.14	0.50	0.14	1.10	0.25	2.20	0.35	4.40	0.60
$500 \le l_n \le 600$	2.60	0.16	0.65	0.16	1.30	0.25	2.60	0.40	5.00	0.70
$600 \le l_n \le 700$	3.00	0.18	0.75	0.18	1.50	0.30	3.00	0.45	6.00	0.70
$700 \le l_n \le 800$	3.40	0.20	0.85	0.20	1.70	0.30	3.40	0.50	6.50	0.80
$800 \le l_n \le 900$	3.80	0.20	0.95	0.20	1.90	0.35	3.80	0.50	7.50	0.90
$900 \le l_n \le 1000$	4.20	0.25	1.00	0.25	2.00	0.40	4.20	0.60	8.00	1.00

Mitutoyo Gage Blocks and Inspection Certificates
A Certificate of Inspection is furnished with all Mitutoyo gage blocks with a serial number on the case and an identification number on each block. The deviation of each block is registered. For this inspection, each gage block is measured relative to the upper level master using a gage block comparator. Grade K gage blocks are manufactured by absolute measurement using an interferometer. The gage block set and discrete gage block are supplied with a Certificate of Calibration. The Certificate of Calibration specifies the deviation from the nominal length. (Comparative measurement, however, is performed for all square gage blocks.)



A Certificate of Accuracy, traceable to the NIST, is furnished with each gage block set and individual block.

Mitutoyo America Corporation
Calibration Laboratory:

ISO 17025-2005 accredited calibration available
Calibration capability up to 1000mm/40" length
Low measurement uncertainty

Contact Information:
965 Corporate Blvd.
Aurora, Illinois 60502
Phone: (888) 648-8869 option 7
Fax: (630) 978-6477

Metric Rectangular Gage Block Set

SERIES 516 — 1mm Base Block Set



Steel 112-block set



Steel 103-block set



Steel 47-block set



CERA 112-block set



CERA 56-block set



CERA/Steel combination 47-block set

Provided with Inspection Certificate





SPECIFICATIONS

1mm Base Block Set

Blocks per set	Order No.		Grade	Blocks included in set		
	Steel	CERA		Size	Step	Qty.
112	516-531-56	516-541-56	K	1.0005		1
	516-937-26	516-337-26	00	1.001 - 1.009	0.001	9
	516-938-26	516-338-26	0	1.01 - 1.49	0.01	49
	516-939-26	516-339-26	AS-1	0.5 - 24.5	0.5	49
	516-940-26	516-340-26	AS-2	25 - 100	25	4
103	516-533-56	516-542-56	K	1.005		1
	516-941-26	516-341-26	00	1.01 - 1.49	0.01	49
	516-942-26	516-342-26	0	0.5 - 24.5	0.5	49
	516-943-26	516-343-26	AS-1	25 - 100	25	4
	516-944-26	516-344-26	AS- 2			
87	516-535-56	515-543-56	K	1.001 - 1.009	0.001	9
	516-945-26	516-345-26	00	1.01 - 1.49	0.01	49
	516-946-26	516-346-26	0	0.5 - 9.5	0.5	19
	516-947-26	516-347-26	AS-1	10 - 100	10	10
	516-948-26	516-348-26	AS- 2			
56	516-536-56	516-544-56	K	0.5		1
	516-953-26	516-353-26	00	1.001 - 1.009	0.001	9
	516-954-26	516-354-26	0	1.01 - 1.09	0.01	9
	516-955-26	516-355-26	AS-1	1.1 - 1.9	0.1	9
	516-956-26	516-356-26	AS-2	1 - 24	1	24
				25 - 100	25	4
47	516-537-56	516-545-56	K	1.005		1
	516-957-26	516-357-26	00	1.01 - 1.09	0.01	9
	516-958-26	516-358-26	0	1.1 - 1.9	0.1	9
	516-959-26	516-359-26	AS-1	1 - 24	1	24
	516-960-26	516-360-26	AS-2	25 - 100	25	4

Mitutoyo

Metric Rectangular Gage Block Set

SERIES 516 — Long Block Set, Wear Block Set



CERA 8-block set



Steel 8-block set

Provided with Inspection Certificate



SPECIFICATIONS

Long Block Set

Blocks per set	Order No. Steel	Order No. CERA	Grade ASME	Blocks included in set Size	Step	Qty.
8	—	**516-547-56**	K	25-200	25	8
	—	**516-164-26**	00	—	—	—
	516-115-26	**516-165-26**	0	—	—	—
	516-116-26	**516-166-26**	AS-1	—	—	—
8	**516-540-56**	**516-546-56**	K	125 - 175	25	3
	516-701-26	**516-731-26**	00	200 - 250	50	2
	516-702-26	**516-732-26**	0	300 - 500	100	3
	516-703-26	**516-733-26**	AS-1			



CERA 2-block set



Carbide 2-block

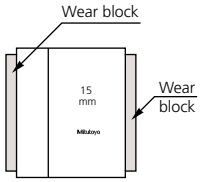

SPECIFICATIONS

Wear Block Set

Blocks per set	Order No. Carbide	Order No. CERA	Grade ASME	Blocks included in set Size	Qty.
2	**516-807-26**	**516-832-26**	0	1	2
	516-806-26	**516-833-26**	AS-1		
2	**516-803-26**	**516-830-26**	0	2	2
	516-802-26	**516-831-26**	AS-1		

Inch Rectangular Gage Block Set

SERIES 516 — Inch Block Set, Thin Block Set, Long Block Set, Wear Block Set

Provided with Inspection Certificate



SPECIFICATIONS

Inch Block Set

Blocks per set	Order No.			Grade	Blocks included in set		
	Steel	CERA	Steel/CERA		Size	Step	Qty.
81	516-549-56	516-557-56	—	K	.1001 – .1009	.0001	9
	516-901-26	516-301-26	—	00	.101 – .149	.001	49
	516-902-26	516-302-26	516-302-27**	0	.05 – .95	.05	19
	516-903-26	516-303-26	—	AS-1	1 - 4	1	4
	516-904-26	516-304-26	—	AS-2			
35	516-550-56	516-558-56	—	K	.10005		1
	516-913-26	516-313-26	—	00	.1001 – .1009	.0001	9
	516-914-26	516-314-26	—	0	.101 – .109	.001	9
	516-915-26	516-315-26	—	AS-1	.11 – .19	.01	9
	516-916-26	516-316-26	—	AS-2	.1 - .3	.1	3
					.5, 1, 2, 4		4

**CERA blocks are adopted for frequently-used blocks.
81-block set: All are CERA blocks, except 2″, 3″, and 4″ are steel blocks

SPECIFICATIONS

Thin Block Set

Blocks per set	Order No.		Grade	Blocks included in set		
	Steel	CERA		Size	Step	Qty.
28	516-551-56	—	K	.02005		1
	516-917-26	—	00	.0201 – .0209	.0001	9
	516-918-26	—	0	.021 – .029	.001	9
	516-919-26	—	AS-1	.01 – .09	.01	9
	516-920-26	—	AS-2			
10	516-926-26	—	0	.005 - .050	.005	10
	516-927-26	—	AS-1			

SPECIFICATIONS

Long Block Set

Blocks per set	Order No.		Grade	Blocks included in set		
	Steel	CERA		Size	Step	Qty.
8	516-126-26	516-176-26	0	1-8	1	8
	516-127-26	516-177-26	AS-1			
8	—	516-564-56	K	5 - 7	1	3
	—	516-741-26	00	8, 10, 12	2	3
	516-712-26	516-742-26	0	16, 20	4	2
	516-713-26	516-743-26	AS-1			

SPECIFICATIONS

Wear Block Set

Blocks per set	Order No.		Grade	Blocks included in set	
	Carbide	CERA		Size	Qty.
2	516-809-26	516-836-26	0	.05	2
	516-808-26	516-837-26	AS-1		
2	516-805-26	516-834-26	0	.1	2
	516-804-26	516-835-26	AS- 1		

Mitutoyo

Micrometer Inspection Gage Block Sets

SERIES 516

- Gage blocks for inspecting a variety of micrometers.
- Can be measured in both vertical and horizontal posture.
- Parallelism is measured by attaching the optical parallel (optional accessory) to the gage block set.

SPECIFICATIONS

Metric Micro Checker (holder only)

Order No.	516-607
Applicable gage block set	516-106-26, 516-107-26, 516-156-26, 516-157-26
Applicable gage block size (mm)	2.5, 5.1, 7.7, 10.3, 12.9, 15, 17.6, 20.2, 22.8, 25

Inch/Metric Micro Checker (holder only)

Order No.	516-608
Applicable gage block set	516-921-26, 516-922-26, 516-923-26, 516-321-26, 516-322-26, 516-323-26
Applicable gage block size (inch)	.105, .210, .315, .420, .5, .605, .815, .920

Metric Block Set

Blocks per set	Order No. Steel	Order No. CERA	Grade	Blocks included in set
10	516-103-26 516-101-26	516-152-26 516-153-26	0 AS- 1	1.00, 1.25, 1.50, 2, 3, 5, 10, 15, 20, 25mm
10	516-106-26 516-107-26	516-156-26 516-157-26	0 AS-1	2.5, 5.1, 7.7, 10.3, 12.9, 15, 17.6, 20.2, 22.8, 25mm • Optical parallel (t = 12mm)

Inch Block Set

Blocks per set	Order No. Steel	Order No. CERA	Grade	Blocks included in set
10	516-552-56 516-921-26 516-922-26 516-923-26	516-559-56 516-321-26 516-322-26 516-323-26	K 00 0 AS-1	.105, .210, .315, .420, .500, .605, .710, .815, .920, 1″ • Optical parallel (t = .5")
10	516-529-26*	516-319-26*	0	.087, .189, .307, .409, .472, .598, .669, .772, .890, 1" • Optical parallel (t = .5")
9	516-554-56 516-929-26 516-930-26 516-931-26	516-561-56 516-333-26 516-334-26 516-335-26	K 00 0 AS- 1	.0625, .100, .125, .200, .250, .300, .500, 1, 2″ • Optical parallel (t = .5")
9	— — 516-934-26 516-935-26	516-563-56 516-329-26 516-330-26 516-331-26	K 00 0 AS- 1	.0625, .100, .125, .200, .250, .300, .500, 1, 2″

* For QuantuMike

Micro Checker

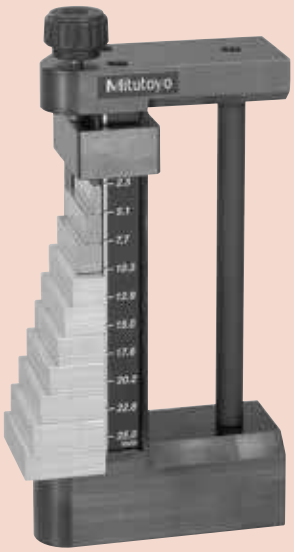

(Gage blocks are optional.)

Mitutoyo guarantees the product quality. PROPRIETARY INSPECTION CERTIFICATE Mitutoyo guarantees the product quality.

Provided with Inspection Certificate



Bore Gage Calibration Kit

SERIES 516

SPECIFICATIONS

Blocks per set	Order No. Carbide	Grade	Blocks included in set Size
9	516-120-26	0	.04″, .08″, .16″, .2″, .4″, .8″, 1″, 2″, 3″ 619018 (plain jaw 2 pc. set) and 619004 (160mm holder)

Individual Metric Rectangular Gage Block

FEATURES

- If using only one length repeatedly, it is good practice to purchase discrete gage blocks.
- Each gage block is supplied with a Certificate of Inspection.
- Each Grade K gage block of ASME standard is specially supplied with a Certificate of Calibration, which certificates that the gage block was manufactured via interferometry.



Suffix Number for Selecting Standard and Certificate Provided

ASME

Grade	Steel, CERA
K	**-516****
00	**-521***
0	**-531***
AS-1	**-541***
AS- 2	**-551***

* provided with Inspection Certificate
** provided with Calibration Certificate and Inspection Certificate

Example: 611821-521
0.1mm gage block in grade 00.

We make custom length gage blocks:
0.1-1000mm



Inspection Certificate

SPECIFICATIONS

Metric Block

Length (mm)	Order No.	
	Steel	CERA
0.1	**611821**	—
0.11	**611860**	—
0.12	**611861**	—
0.13	**611862**	—
0.14	**611863**	—
0.15	**611822**	—
0.16	**611864**	—
0.17	**611865**	—
0.18	**611866**	—
0.19	**611867**	—
0.2	**611823**	—
0.21	**611868**	—
0.22	**611869**	—
0.23	**611870**	—
0.24	**611871**	—
0.25	**611824**	—
0.26	**611872**	—
0.27	**611873**	—
0.28	**611874**	—
0.29	**611875**	—
0.3	**611825**	—
0.31	**611876**	—
0.32	**611877**	—
0.33	**611878**	—
0.34	**611879**	—
0.35	**611826**	—
0.36	**611880**	—
0.37	**611881**	—
0.38	**611882**	—
0.39	**611883**	—
0.4	**611827**	—
0.41	**611884**	—
0.42	**611885**	—
0.43	**611886**	—
0.44	**611887**	—
0.45	**611828**	—
0.46	**611888**	—
0.47	**611889**	—
0.48	**611890**	—
0.49	**611891**	—
0.5	**611506**	**613506**
0.51	**611892**	—
0.52	**611893**	—

Length (mm)	Order No.	
	Steel	CERA
0.53	**611894**	—
0.54	**611895**	—
0.55	**611896**	—
0.56	**611897**	—
0.57	**611898**	—
0.58	**611899**	—
0.59	**611900**	—
0.6	**611901**	—
0.61	**611902**	—
0.62	**611903**	—
0.63	**611904**	—
0.64	**611905**	—
0.65	**611906**	—
0.66	**611907**	—
0.67	**611908**	—
0.68	**611909**	—
0.69	**611910**	—
0.7	**611911**	—
0.71	**611912**	—
0.72	**611913**	—
0.73	**611914**	—
0.74	**611915**	—
0.75	**611916**	—
0.76	**611917**	—
0.77	**611918**	—
0.78	**611919**	—
0.79	**611920**	—
0.8	**611921**	—
0.81	**611922**	—
0.82	**611923**	—
0.83	**611924**	—
0.84	**611925**	—
0.85	**611926**	—
0.86	**611927**	—
0.87	**611928**	—
0.88	**611929**	—
0.89	**611930**	—
0.9	**611931**	—
0.91	**611932**	—
0.92	**611933**	—
0.93	**611934**	—
0.94	**611935**	—
0.95	**611936**	—

Length (mm)	Order No.	
	Steel	CERA
0.96	**611937**	—
0.97	**611938**	—
0.98	**611939**	—
0.99	**611940**	—
0.991	**611551**	**613551**
0.992	**611552**	**613552**
0.993	**611553**	**613553**
0.994	**611554**	**613554**
0.995	**611555**	**613555**
0.996	**611556**	**613556**
0.997	**611557**	**613557**
0.998	**611558**	**613558**
0.999	**611559**	**613559**
1	**611611**	**613611**
1.0005	**611520**	**613520**
1.001	**611521**	**613521**
1.002	**611522**	**613522**
1.003	**611523**	**613523**
1.004	**611524**	**613524**
1.005	**611525**	**613525**
1.006	**611526**	**613526**
1.007	**611527**	**613527**
1.008	**611528**	**613528**
1.009	**611529**	**613529**
1.01	**611561**	**613561**
1.02	**611562**	**613562**
1.03	**611563**	**613563**
1.04	**611564**	**613564**
1.05	**611565**	**613565**
1.06	**611566**	**613566**
1.07	**611567**	**613567**
1.08	**611568**	**613568**
1.09	**611569**	**613569**
1.1	**611570**	**613570**
1.11	**611571**	**613571**
1.12	**611572**	**613572**
1.13	**611573**	**613573**
1.14	**611574**	**613574**
1.15	**611575**	**613575**
1.16	**611576**	**613576**
1.17	**611577**	**613577**
1.18	**611578**	**613578**
1.19	**611579**	**613579**

Length (mm)	Order No.	
	Steel	CERA
1.2	611580	613580
1.21	611581	613581
1.22	611582	613582
1.23	611583	613583
1.24	611584	613584
1.25	611585	613585
1.26	611586	613586
1.27	611587	613587
1.28	611588	613588
1.29	611589	613589
1.3	611590	613590
1.31	611591	613591
1.32	611592	613592
1.33	611593	613593
1.34	611594	613594
1.35	611595	613595
1.36	611596	613596
1.37	611597	613597
1.38	611598	613598
1.39	611599	613599
1.4	611600	613600
1.41	611601	613601
1.42	611602	613602
1.43	611603	613603
1.44	611604	613604
1.45	611605	613605
1.46	611606	613606
1.47	611607	613607
1.48	611608	613608
1.49	611609	613609
1.5	611641	613641
1.6	611516	613516
1.7	611517	613517
1.8	611518	613518
1.9	611519	613519
2	611612	613612
2.0005	611690	—
2.001	611691	—
2.002	611692	—
2.003	611693	—
2.004	611694	—
2.005	611695	—
2.006	611696	—
2.007	611697	—
2.008	611698	—
2.009	611699	—
2.01	611701	—
2.02	611702	—
2.03	611703	—
2.04	611704	—
2.05	611705	—
2.06	611706	—
2.07	611707	—
2.08	611708	—
2.09	611709	—
2.1	611710	—
2.11	611711	—
2.12	611712	—
2.13	611713	—
2.14	611714	—
2.15	611715	—
2.16	611716	—

Length (mm)	Order No.	
	Steel	CERA
2.17	611717	—
2.18	611718	—
2.19	611719	—
2.2	611720	—
2.21	611721	—
2.22	611722	—
2.23	611723	—
2.24	611724	—
2.25	611725	—
2.26	611726	—
2.27	611727	—
2.28	611728	—
2.29	611729	—
2.3	611730	—
2.31	611731	—
2.32	611732	—
2.33	611733	—
2.34	611734	—
2.35	611735	—
2.36	611736	—
2.37	611737	—
2.38	611738	—
2.39	611739	—
2.4	611740	—
2.41	611741	—
2.42	611742	—
2.43	611743	—
2.44	611744	—
2.45	611745	—
2.46	611746	—
2.47	611747	—
2.48	611748	—
2.49	611749	—
2.5	611642	613642
2.6	611750	—
2.7	611751	—
2.8	611752	—
2.9	611753	—
3	611613	613613
3.5	611643	613643
4	611614	613614
4.5	611644	613644
5	611615	613615
5.1	611850	613850
5.5	611645	613645
6	611616	613616
6.5	611646	613646
7	611617	613617
7.5	611647	613647
7.7	611851	613851
8	611618	613618
8.5	611648	613648
9	611619	613619
9.5	611649	613649
10	611671	613671
10.3	611852	613852
10.5	611650	613650
11	611621	613621
11.5	611651	613651
12	611622	613622
12.5	611652	613652
12.9	611853	613853

Length (mm)	Order No.	
	Steel	CERA
13	611623	613623
13.5	611653	613653
14	611624	613624
14.5	611654	613654
15	611625	613625
15.5	611655	613655
16	611626	613626
16.5	611656	613656
17	611627	613627
17.5	611657	613657
17.6	611854	613854
18	611628	613628
18.5	611658	613658
19	611629	613629
19.5	611659	613659
20	611672	613672
20.2	611855	613855
20.5	611660	613660
21	611631	613631
21.5	611661	613661
22	611632	613632
22.5	611662	613662
22.8	611856	613856
23	611633	613633
23.5	611663	613663
24	611634	613634
24.5	611664	613664
25	611635	613635
25.25	611754	613754
30	611673	613673
35	611755	613755
40	611674	613674
41.3	611857	613857
45	611756	613756
50	611675	613675
60	611676	613676
70	611677	613677
75	611801	613801
80	611678	613678
90	611679	613679
100	611681	613681
125	611802	613802
131.4	611858	613858
150	611803	613803
175	611804	613804
200	611682	613682
250	611805	613805
300	611683	613683
400	611684	613684
500	611685	613685
600	611840	—
700	611841	—
750	611842	—
800	611843	—
900	611844	—
1000	611845	—

Metric Wear Block

Length (mm)	Order No. Tungsten carbide
1	612611
2	612612

DIMENSIONS

Unit: mm

Nominal length:
0.1mm - 5.5mm

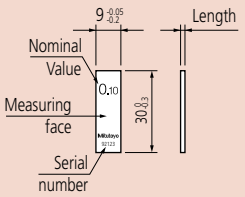

Nominal length:
6mm - 10mm

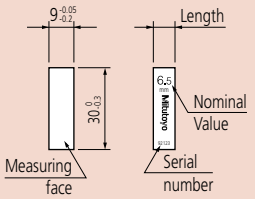

Nominal length:
10.3mm - 100mm

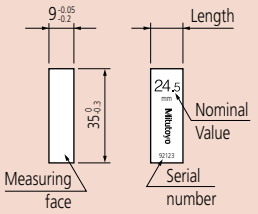

Nominal length 125mm - 1000mm

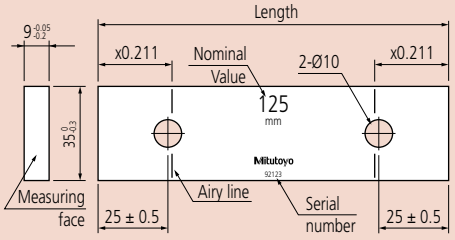

Individual Inch Rectangular Gage Block

Suffix Number for Selecting Standard and Certificate Provided

ASME

Grade	Steel, CERA
K	**-516****
00	**-521***
0	**-531***
AS-1	**-541***
AS-2	**-551***

* provided with Inspection Certificate
** provided with Calibration Certificate and Inspection Certificate

Example: 611310-521
.1" gage block in grade 00.

We make custom length gage blocks:
.004 - 20"



Inspection Certificate

DIMENSIONS

Unit: Inch

Nominal length:
.004 - .25"

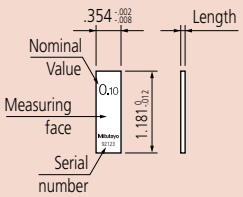

Nominal length:
.3 - 4"

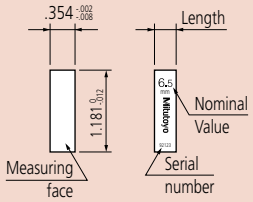

Nominal length:
.45 - 4"

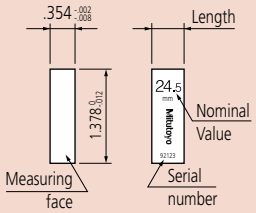

Nominal length 5 - 20"

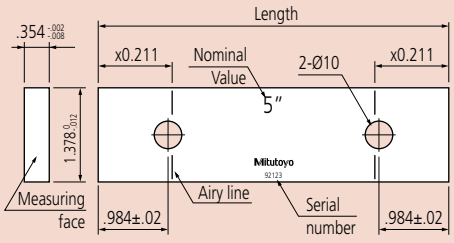

SPECIFICATIONS

Inch Block

Length (inch)	Order No.	
	Steel	CERA
.004	**611304**	—
.005	**611305**	—
.006	**611306**	—
.007	**611307**	—
.008	**611308**	—
.009	**611309**	—
.01	**611310**	—
.011	**611311**	—
.012	**611312**	—
.013	**611313**	—
.014	**611314**	—
.015	**611315**	—
.016	**611316**	—
.017	**611317**	—
.018	**611318**	—
.019	**611319**	—
.02	**611320**	—
.02005	**611240**	—
.0201	**611231**	—
.0202	**611232**	—
.0203	**611233**	—
.0204	**611234**	—
.0205	**611235**	—
.0206	**611236**	—
.0207	**611237**	—
.0208	**611238**	—
.0209	**611239**	—
.021	**611321**	—
.022	**611322**	—
.023	**611323**	—
.024	**611324**	—
.025	**611325**	—
.026	**611326**	—
.027	**611327**	—
.028	**611328**	—
.029	**611329**	—
.03	**611330**	—
.031	**611331**	—
.03125 (1/32)	**611101**	**613103**
.032	**611332**	—
.033	**611333**	—
.034	**611334**	—
.035	**611335**	—
.036	**611336**	—
.037	**611337**	—
.038	**611338**	—
.039	**611339**	—
.04	**611340**	—
.041	**611341**	—
.042	**611342**	—
.043	**611343**	—
.044	**611344**	—
.045	**611345**	—
.046	**611346**	—
.046875 (3/64)	**611102**	**613104**
.047	**611347**	—
.048	**611348**	—
.049	**611349**	—
.05	**611105**	**613105**

Length (inch)	Order No.	
	Steel	CERA
.06	**611106**	—
.0625	**611303**	**613303**
.07	**611107**	—
.078125 (5/64)	**611103**	**613100**
.08	**611108**	—
.09	**611109**	—
.09375 (3/32)	**611104**	**613101**
.1	**611191**	**613191**
.100025	**611111**	**613110**
.10005	**611135**	**613135**
.100075	**611112**	**613111**
.1001	**611121**	**613121**
.1002	**611122**	**613122**
.1003	**611123**	**613123**
.1004	**611124**	**613124**
.1005	**611125**	**613125**
.1006	**611126**	**613126**
.1007	**611127**	**613127**
.1008	**611128**	**613128**
.1009	**611129**	**613129**
.101	**611141**	**613141**
.102	**611142**	**613142**
.103	**611143**	**613143**
.104	**611144**	**613144**
.105	**611145**	**613145**
.106	**611146**	**613146**
.107	**611147**	**613147**
.108	**611148**	**613148**
.109	**611149**	**613149**
.109375 (7/64)	**611110**	**613102**
.11	**611150**	**613150**
.111	**611151**	**613151**
.112	**611152**	**613152**
.113	**611153**	**613153**
.114	**611154**	**613154**
.115	**611155**	**613155**
.116	**611156**	**613156**
.117	**611157**	**613157**
.118	**611158**	**613158**
.119	**611159**	**613159**
.12	**611160**	**613160**
.121	**611161**	**613161**
.122	**611162**	**613162**
.123	**611163**	**613163**
.124	**611164**	**613164**
.125	**611165**	**613165**
.126	**611166**	**613166**
.127	**611167**	**613167**
.128	**611168**	**613168**
.129	**611169**	**613169**
.13	**611170**	**613170**
.131	**611171**	**613171**
.132	**611172**	**613172**
.133	**611173**	**613173**
.134	**611174**	**613174**
.135	**611175**	**613175**
.136	**611176**	**613176**
.137	**611177**	**613177**
.138	**611178**	**613178**

Length (inch)	Order No.	
	Steel	CERA
.139	**611179**	**613179**
.14	**611180**	**613180**
.141	**611181**	**613181**
.142	**611182**	**613182**
.143	**611183**	**613183**
.144	**611184**	**613184**
.145	**611185**	**613185**
.146	**611186**	**613186**
.147	**611187**	**613187**
.148	**611188**	**613188**
.149	**611189**	**613189**
.15	**611115**	**613115**
.16	**611116**	**613116**
.17	**611117**	**613117**
.18	**611118**	**613118**
.19	**611119**	**613119**
.2	**611192**	**613192**
.21	**611221**	**613221**
.25	**611212**	**613212**
.3	**611193**	**613193**
.315	**611209**	**613209**
.35	**611213**	**613213**
.375 (3/8)	**611113**	**613112**
.4	**611194**	**613194**
.420	**611210**	**613210**
.45	**611214**	**613214**
.5	**611195**	**613195**
.55	**611215**	**613215**
.6	**611196**	**613196**
.605	**611211**	**613211**
.65	**611216**	**613216**
.7	**611197**	**613197**
.710	**611220**	**613220**
.75	**611217**	**613217**
.8	**611198**	**613198**
.815	**611226**	**613226**
.85	**611218**	**613218**
.9	**611199**	**613199**
.920	**611227**	**613227**
.95	**611219**	**613219**
1	**611201**	**613201**
2	**611202**	**613202**
3	**611203**	**613203**
4	**611204**	**613204**
5	**611205**	**613205**
6	**611206**	**613206**
7	**611207**	**613207**
8	**611208**	**613208**
10	**611222**	**613222**
12	**611223**	**613223**
16	**611224**	**613224**
20	**611225**	**613225**

Inch Wear Block

Length (inch)	Order No. Tungsten carbide
.05	**612105**
.1	**612191**

Mitutoyo

Rectangular Gage Block with CTE

Gage Blocks with Thermal Expansion Coefficient Data

FEATURES

- Mitutoyo offers top-level gage blocks (steel and ceramic) which are superior to K class blocks.
- Comes with a highly accurate thermal expansion coefficient measured with a high-accuracy double-faced interferometer (DFI).
- The high-accuracy gage block interferometer (GBI) guarantees high dimensional accuracy.
- Mitutoyo offers rectangular gage blocks, having nominal values from 100 to 500mm
  Grade: K class in ASME
  Uncertainty of thermal expansion coefficient: 0.035 x 10^{-6}/K (k = 2)
  Uncertainty of dimension measurement: 30nm (k = 2), for 100mm block

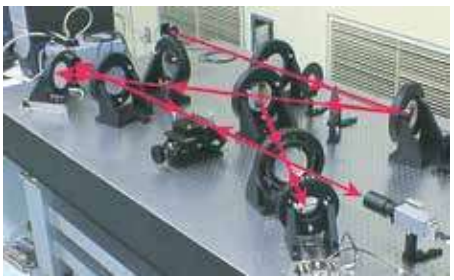

Double-faced interferometer (DFI)

SPECIFICATIONS

Metric Block with CTE

Length (mm)	Order No. Steel	Order No. CERA
100	**611681-51B**	**613681-51B**
125	**611802-51B**	**613802-51B**
150	**611803-51B**	**613803-51B**
175	**611804-51B**	**613804-51B**
200	**611682-51B**	**613682-51B**
250	**611805-51B**	**613805-51B**
300	**611683-51B**	**613683-51B**
400	**611684-51B**	**613684-51B**
500	**611685-51B**	**613685-51B**

Inch Block with CTE

Length (inch)	Order No. Steel	Order No.CERA
4	**611204-51B**	**613204-51B**
5	**611205-51B**	**613205-51B**
6	**611206-51B**	**613206-51B**
7	**611207-51B**	**613207-51B**
8	**611208-51B**	**613208-51B**
10	**611222-51B**	**613222-51B**
12	**611223-51B**	**613223-51B**
16	**611224-51B**	**613224-51B**
20	**611225-51B**	**613225-51B**

Suffix Number for Selecting Standard and Certificate Provided

ASME

	Steel, CERA
Grade K	**-51B**

-51B: provided with JCSS Calibration Certificate and Inspection Certificate



Inspection Certificate



ZERO CERA Blocks

- Thermal expansion in the temperature range 20±1°C less than 1/500 that of steel (0±0.02×10^{-6}/K(20°C))
- Almost no secular change both in dimension and coefficient of thermal expansion
- Complementary ultra-low thermal expansion and high specific rigidity (Young's Modulus/ specific gravity)



SPECIFICATIONS

Metric Blocks

Order No.			Length (mm)
JIS/ISO/DIN	BS	ASME	
617673-016	**617673-116**	**617673-516**	30
617675-016	**617675-116**	**617675-516**	50
617681-016	**617681-116**	**617681-516**	100
617682-016	**617682-116**	**617682-516**	200
617683-016	**617683-116**	**617683-516**	300
617684-016	**617684-116**	**617684-516**	400
617685-016	**617685-116**	**617685-516**	500
617840-016	**617840-116**	**617840-516**	600
617841-016	**617841-116**	**617841-516**	700
617843-016	**617843-116**	**617843-516**	800
617844-016	**617844-116**	**617844-516**	900
617845-016	**617845-116**	**617845-516**	1000
516-771-60	**516-771-61**	**516-771-66**	Above set

Rectangular Gage Block Accessories

SERIES 516 – For Gage Blocks over 100mm

Specially designed for long gage blocks over 100mm, which have two holes on the body for coupling.



516-605

SPECIFICATIONS

Accessories for gage blocks over 100mm

Order No. 516-605	Included in set
1 pc.	Holder A (**619031**)
1 pc.	Holder B (**619032**)
1 pc.	Holder C (**619033**)
1 pc.	Holder D (**619034**)
1 pc.	Holder E (**619035**)
3 pcs.	Adaptor (**619036**)
1 pc.	Holder base 35mm (**619009**)
2 pcs.	Half round jaw 12mm (**619013**)
1 pc.	Plain jaw (2 pc. set) (**619018**)
1 pc.	Scriber point (**619019**)

Note: These accessories can be used for inch rectangular gage blocks.

Holder A: **619031**
Used for coupling two long gage blocks.

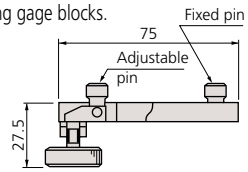



Holder B and C:
Used for coupling two long gage blocks together with other gage blocks up to 35mm (Holder B) or 140mm (Holder C). Also used for attaching jaws with two adapters.

	Order No.	R (max.)	L
Holder B	**619032**	90mm	126mm
Holder C	**619033**	200mm	236mm

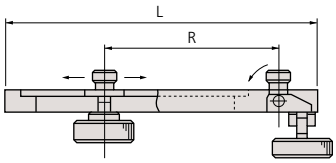



Holder D: **619034**
Used for attaching to the holder base.

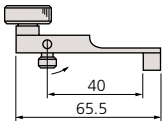



Holder E: **619035**
Used for attaching to the holder base together with other gage blocks up to 125mm. Used for attaching jaws with one adapter.

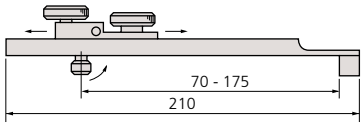

Half-round jaw: **619013**

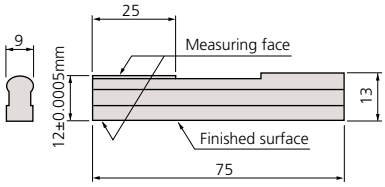

Holder base: **619009**
Adaptor: **619036**

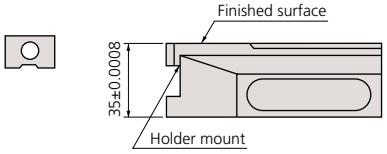

Scriber point: **619019**

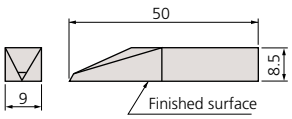

Plain jaw: **619018** (2 pc. set)

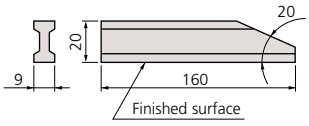

Mitutoyo

Rectangular Gage Block Accessories

SERIES 516

To expand the variety of rectangular gage block (steel and CERA) applications, Mitutoyo offers the gage block accessories set. By assembling the items in the set, you can easily and quickly build up a precision measuring instrument.



516-601



516-602







SPECIFICATIONS

Assortment of Accessories

Order No.	Accessories	Metric Set Order No.		Accessory (s) included in a set
		516-601	516-602	
619002	Holder 60mm		•	1 pc.
619003	Holder 100mm	•	•	1 pc.
619004	Holder 160mm	•	•	1 pc.
619005	Holder 250mm	•	•	1 pc.
619009	Holder Base 35mm	•	•	1 pc.
619010	Half round jaw 2mm	•	•	2 pcs.
619011	Half round jaw 5mm	•	•	2 pcs.
619012	Half round jaw 8mm	•	•	2 pcs.
619013	Half round jaw 12mm	•		2 pcs.
619014	Half round jaw 20mm	•		2 pcs.
619018	Plain jaw (2 pc. set) 160mm	•		1 pc.
619019	Scriber point	•	•	1 pc.
619020	Center point	•	•	1 pc.
619021	Tram point	•		2 pcs.
619022	Triangular straightness edge 100mm	•	•	1 pc.
619023	Triangular straight edge 160mm	•		1 pc.
	Total Qty. in set	22 pcs.	14 pcs.	

Rectangular Gage Block Accessories

Holder:
Used as a clamp if using plain jaws, scriber point, etc.

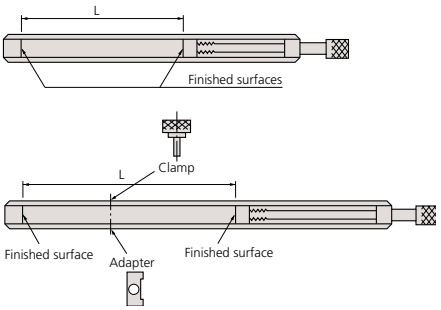

Order No.	L
619002	15 - 61mm
619003	4 - 106mm
619004	62 - 165mm
619005	153 - 256mm

Holder base 35mm: **619009**
Measures a height on the surface plate and scribes a workpiece if used with the holder.

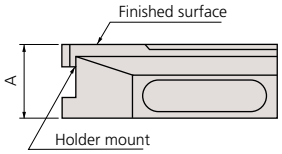

Order No.	A
619009	35±0.005mm

Scriber point: **619019**
Scribes a workpiece if used with the holder and holder base.

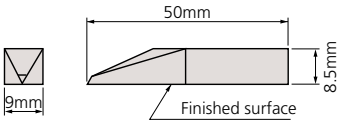

Center point: **619020**
Scribes a workpiece if used with the holder and holder base.

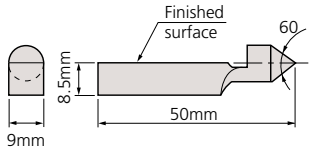

Tram point: **619021**
Inspects the scale of the height gage, etc., if used with the holder and holder base.

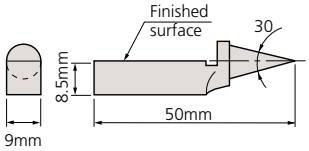

Plain jaw: **619018**
Measures an outside or inside diameter if used with a pair of jaws and the holder.

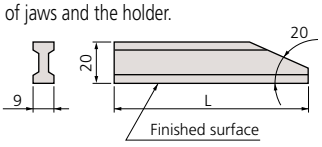

Order No.	L
619018*	160mm

* 2 pc. set

Triangular straight edge: Measures parallelism.

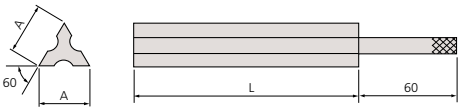

Order No.	L
619022	100mm
619023	160mm

Half-round jaw:
Measures an outside or inside diameter if used with a pair of jaws and the holder.

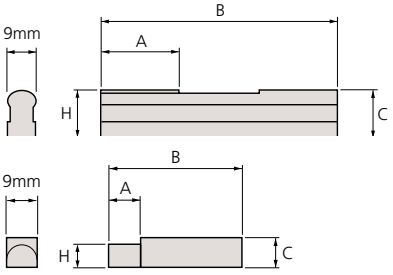

Order No.	H	A	B	C
619010	2±0.0005mm	6mm	40mm	8mm
619011	5±0.0005mm	6mm	50mm	8mm
619012	8±0.0005mm	12mm	60mm	8mm
619013	12±0.0005mm	25mm	75mm	13mm
619014	20±0.0005mm	25mm	125mm	20.5mm

Mitutoyo

Metric Square Gage Block Set

SERIES 516 — Metric Block Set, Long Block Set, Wear Block Set

A square gage block can retain stable orientation both longitudinally and laterally. A wide range of application measurements can be made, including cutting tool positioning, angle measurement with a sine bar, taper measurement with a roller, and inspection of depth micrometers.



Steel 32-block set



Steel 76-block set



Steel 103-block set



Steel 112-block set

SPECIFICATIONS

Metric Block Set

Blocks per set	Order No.		Grade	Blocks included in set		
	Steel	CERA		Size	Step	Qty.
112	**516-437-26**	—	00	1.0005		1
	516-438-26	—	0	1.001 - 1.009	0.001	9
	516-439-26	—	AS-1	1.01 - 1.49	0.01	49
	516-440-26	—	AS-2	0.5 - 24.5	0.5	49
	—	—	—	25 - 100	25	4
103	**516-441-26**	—	00	1.005		1
	516-442-26	—	0	1.01 - 1.49	0.01	49
	516-443-26	—	AS-1	0.5 - 24.5	0.5	49
	516-444-26	—	AS-2	25 - 100	25	4
76	**516-449-26**	—	00	1.005		1
	516-450-26	—	0	1.01 - 1.49	0.01	49
	516-451-26	—	AS-1	0.5 - 9.5	0.5	19
	516-452-26	—	AS-2	10 - 40	10	4
	—	—	—	50 - 100	25	3
47	**516-457-26**	—	00	1.005		1
	516-458-26	—	0	1.01 - 1.09	0.01	9
	516-459-26	—	AS-1	1.1 - 1.9	0.1	9
	516-460-26	—	AS-2	1 - 24	1	24
		—	—	25 - 100	25	4
32	**516-465-26**	—	00	1.005		1
	516-466-26	—	0	1.01 - 1.09	0.01	9
	516-467-26	—	AS-1	1.1 - 1.9	0.1	9
	516-468-26	—	AS-2	1 - 9	1	9
	—	—	—	10 - 30	10	3
	—			60		1

Metric Long Block Set

Blocks per set	Order No.		Grade	Blocks included in set		
	Steel	CERA		Size	Step	Qty.
8	**516-751-26**	—	00	125, 150, 175	25	3
	516-752-26	—	0	200, 250	50	2
	516-753-26	—	AS-1	300, 400, 500	100	3
	516-754-26	—	AS-2			

Metric Wear Block Set

Blocks per set	Order No.		Grade	Blocks included in set		
	Carbide	CERA		Size	Step	Qty.
2	**516-820-26**	—	0	1	—	2
	516-821-26	—	AS-1			

Provided with Inspection Certificate



Inch Square Gage Block Set

SERIES 516 — Inch Block Set, Long Block Set, Wear Block Set

Provided with Inspection Certificate





Steel 47-block set



Steel 8-block set



Carbide 2-block set

SPECIFICATIONS

Inch Block Set

Blocks per set	Order No.		Grade	Blocks included in set		
	Steel	CERA		Size	Step	Qty.
81	516-401-26	516-201-26	00	.1001 - .1009	.0001	9
	516-402-26	516-202-26	0	.101 - .149	.001	49
	516-403-26	516-203-26	AS-1	.05 - .95	.05	19
	516-404-26	516-204-26	AS-2	1 - 4	1	4
36	516-421-26	516-221-26	00	.05″		1
	516-422-26	516-222-26	0	.1001 - .1009	.0001	10
	516-423-26	516-223-26	AS-1	.101 - .109	.001	9
	516-424-26	516-224-26	AS-2	.11 - .19	.01	9
				.1 - .5	.1	5
				1, 2, 4	1	3
28	516-417-26	—	00	.02005″		1
	516-418-26	—	0	.0201 - .0209″	.0001	9
	516-419-26	—	AS-1	.021 - .029″	.001	9
	516-420-26	—	AS-2	.021 - .029″	.01	9
				.10 - .090″		

Inch Long Block Set

Blocks per set	Order No.		Grade	Blocks included in set		
	Steel	CERA		Size	Step	Qty.
8	516-762-26	—	0	5 - 7	1	3
	516-763-26	—	AS-1	8, 10, 12	2	3
				16, 20	4	2

Inch Wear Block Set

Blocks per set	Order No.		Grade	Blocks included in set		
	Carbide	CERA		Size	Step	Qty.
2	516-824-26	516-846-26	0	.05	—	2
	516-825-26	516-847-26	AS-1			
2	516-826-26	516-844-26	0	.1	—	2
	516-827-26	516-845-26	AS-1			

92 pcs. Gage Blocks with accessories set in wooden box

Blocks in set	Order No.	Grade	Blocks included in set			Individual No.	Description	Qty.
	Steel		Size	Step	Qty			
92	516-405-26	0	.0625		1	619052	Plain Jaw .500″	2
			.078125		1	619051	Half round jaw .250″	2
			.09375		1	619055	Holder base .500″	1
			.100025		1	619057	Flat head screw 1 1/4″	2
			.10005		1	619058	Flat head screw 5/8″	2
			.100075		1	619056	Stud	2
			.109375		1	619066	Knurled head screw	2
			.1001 - .1009	.0001	9	619059	Slotted head nut	2
			.101 - .149	.001	49	619062	Tie rod 3″	1
			.05 - .95	.05	4	619063	Tie rod 2 1/4″	1
			.16 - .19	.01	19	619064	Tie rod 1 1/2″	1
			1 4	1	4	619065	3/4″	1

Mitutoyo

Individual Metric Square Gage Block



SPECIFICATIONS

Metric Block

Length (mm)	Order No.	
	Steel	CERA
0.5	**614506**	—
1	**614611**	—
1.0005	**614520**	—
1.001	**614521**	—
1.002	**614522**	—
1.003	**614523**	—
1.004	**614524**	—
1.005	**614525**	—
1.006	**614526**	—
1.007	**614527**	—
1.008	**614528**	—
1.009	**614529**	—
1.01	**614561**	—
1.02	**614562**	—
1.03	**614563**	—
1.04	**614564**	—
1.05	**614565**	—
1.06	**614566**	—
1.07	**614567**	—
1.08	**614568**	—
1.09	**614569**	—
1.1	**614570**	—
1.11	**614571**	—
1.12	**614572**	—
1.13	**614573**	—
1.14	**614574**	—
1.15	**614575**	—
1.16	**614576**	—
1.17	**614577**	—
1.18	**614578**	—
1.19	**614579**	—
1.2	**614580**	—
1.21	**614581**	—
1.22	**614582**	—
1.23	**614583**	—
1.24	**614584**	—
1.25	**614585**	—
1.26	**614586**	—
1.27	**614587**	—
1.28	**614588**	—
1.29	**614589**	—
1.3	**614590**	—
1.31	**614591**	—
1.32	**614592**	—

Length (mm)	Order No.	
	Steel	CERA
1.33	**614593**	—
1.34	**614594**	—
1.35	**614595**	—
1.36	**614596**	—
1.37	**614597**	—
1.38	**614598**	—
1.39	**614599**	—
1.4	**614600**	—
1.41	**614601**	—
1.42	**614602**	—
1.43	**614603**	—
1.44	**614604**	—
1.45	**614605**	—
1.46	**614606**	—
1.47	**614607**	—
1.48	**614608**	—
1.49	**614609**	—
1.5	**614641**	—
1.6	**614516**	—
1.7	**614517**	—
1.8	**614518**	—
1.9	**614519**	—
2	**614612**	—
2.5	**614642**	—
3	**614613**	—
3.5	**614643**	—
4	**614614**	—
4.5	**614644**	—
5	**614615**	—
5.5	**614645**	—
6	**614616**	—
6.5	**614646**	—
7	**614617**	—
7.5	**614647**	—
8	**614618**	—
8.5	**614648-**	—
9	**614619**	—
9.5	**614649**	—
10	**614671**	—
10.5	**614650**	—
11	**614621**	—
11.5	**614651**	—
12	**614622**	—
12.5	**614652**	—

Length (mm)	Order No.	
	Steel	CERA
13	**614623**	—
13.5	**614653**	—
14	**614624**	—
14.5	**614654**	—
15	**614625**	—
15.5	**614655**	—
16	**614626**	—
16.5	**614656**	—
17	**614627**	—
17.5	**614657**	—
18	**614628**	—
18.5	**614658**	—
19	**614629**	—
19.5	**614659**	—
20	**614672**	—
20.5	**614660**	—
21	**614631**	—
21.5	**614661**	—
22	**614632**	—
22.5	**614662**	—
23	**614633**	—
23.5	**614663**	—
24	**614634**	—
24.5	**614664**	—
25	**614635**	—
30	**614673**	—
40	**614674**	—
50	**614675**	—
60	**614676**	—
75	**614801**	—
100	**614681**	—
125	**614802**	—
150	**614803**	—
175	**614804**	—
200	**614682**	—
250	**614805**	—
300	**614683**	—
400	**614684**	—
500	**614685**	—

Metric Wear Block

Length (mm)	Order No. Tungsten carbide
1	**615611**
2	**615612**

Suffix Number for Selecting Standard and Certificate Provided

ASME

Grade	Steel
K	—
00	**-521***
0	**-531***
AS-1	**-541***
AS-2	**-551***

* provided with Inspection Certificate

Example: 614611-521
1mm gage block in grade 00.

We make custom length gage blocks:
0.5 - 500mm.



Inspection Certificate

Individual Inch Square Gage Block

Suffix Number for Selecting Standard and Certificate Provided

ASME

Grade	Steel, CERA
K	—
00	**-521***
0	**-531***
AS-1	**-541***
AS-2	**-551***

* provided with Inspection Certificate

Example: 614310-521
.01" gage block in grade 00.

We make custom length gage blocks:
.01 - 20"



Inspection Certificate

DIMENSIONS

Unit: mm

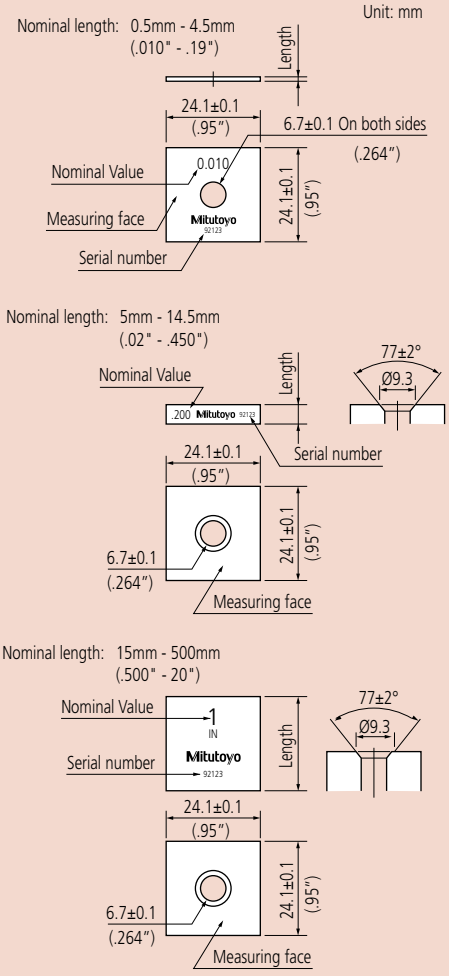

SPECIFICATIONS

Inch Block

Length (inch)	Order No.	
	Steel	CERA
.01	**614310**	—
.02005	**614240**	—
.0201	**614231**	—
.0202	**614232**	—
.0203	**614233**	—
.0204	**614234**	—
.0205	**614235**	—
.0206	**614236**	—
.0207	**614237**	—
.0208	**614238**	—
.0209	**614239**	—
.02	**614320**	—
.021	**614321**	—
.022	**614322**	—
.023	**614323**	—
.024	**614324**	—
.025	**614325**	—
.026	**614326**	—
.027	**614327**	—
.028	**614328**	—
.029	**614329**	—
.03	**614330**	—
.03125 (1/32)	**614301**	—
.04	**614340**	—
.046875 (3/64)	**614302**	—
.05	**614105**	**616105**
.06	**614106**	—
.0625	**614303**	**616303**
.07	**614107**	—
.078125 (5/64)	**614304**	—
.08	**614108**	—
.09	**614109**	—
.09375 (3/32)	**614305**	—
.1	**614191**	**616191**
.100025	**614307**	—
.10005	**614135**	**616135**
.100075	**614308**	—
.1001	**614121**	**616121**
.1002	**614122**	**616122**
.1003	**614123**	**616123**
.1004	**614124**	**616124**
.1005	**614125**	**616125**
.1006	**614126**	**616126**
.1007	**614127**	**616127**
.1008	**614128**	**616128**
.1009	**614129**	**616129**
.101	**614141**	**616141**
.102	**614142**	**616142**
.103	**614143**	**616143**
.104	**614144**	**616144**
.105	**614145**	**616145**

Length (inch)	Order No.	
	Steel	CERA
.106	**614146**	**616146**
.107	**614147**	**616147**
.108	**614148**	**616148**
.109	**614149**	**616149**
.109375 (7/64)	**614306**	—
.11	**614150**	**616150**
.111	**614151**	**616151**
.112	**614152**	**616152**
.113	**614153**	**616153**
.114	**614154**	**616154**
.115	**614155**	**616155**
.116	**614156**	**616156**
.117	**614157**	**616157**
.118	**614158**	**616158**
.119	**614159**	**616159**
.12	**614160**	**616160**
.121	**614161**	**616161**
.122	**614162**	**616162**
.123	**614163**	**616163**
.124	**614164**	**616164**
.125	**614165**	**616165**
.126	**614166**	**616166**
.127	**614167**	**616167**
.128	**614168**	**616168**
.129	**614169-**	**616169**
.13	**614170**	**616170**
.131	**614171**	**616171**
.132	**614172**	**616172**
.133	**614173**	**616173**
.134	**614174**	**616174**
.135	**614175**	**616175**
.136	**614176**	**616176**
.137	**614177**	**616177**
.138	**614178**	**616178**
.139	**614179**	**616179**
.14	**614180**	**616180**
.141	**614181**	**616181**
.142	**614182**	**616182**
.143	**614183**	**616183**
.144	**614184**	**616184**
.145	**614185**	**616185**
.146	**614186**	**616186**
.147	**614187**	**616187**
.148	**614188**	**616188**
.149	**614189**	**616189**
.15	**614115**	**616115**
.16	**614116**	**616116**
.17	**614117**	**616117**
.18	**614118**	**616118**
.19	**614119**	**616119**
.2	**614192**	**616192**

Length (inch)	Order No.	
	Steel	CERA
.25	**614212**	**616212**
.3	**614193**	**616193**
.35	**614213**	**616213**
.375 (3/8)	**614309**	—
.4	**614194**	**616194**
.45	**614214**	**616214**
.5	**614195**	**616195**
.55	**614215**	**616215**
.6	**614196**	**616196**
.65	**614216**	**616216**
.7	**614197**	**616197**
.75	**614217**	**616217**
.8	**614198**	**616198**
.85	**614218**	**616218**
.9	**614199**	**616199**
.95	**614219**	**616219**
1	**614201**	**616201**
2	**614202**	**616202**
3	**614203**	**616203**
4	**614204**	**616204**
5	**614205**	—
6	**614206**	—
7	**614207**	—
8	**614208**	—
10	**614222**	—
12	**614223**	—
16	**614224**	—
20	**614225**	—

Inch Wear Block

Length (inch)	Order No. Tungsten carbide
.05	**615105**
.1	**615191**

Mitutoyo

Square Gage Block Accessories

SERIES 516

To expand the variety of square gage block applications, Mitutoyo offers the gage block accessories set. By assembling the items in the set, you can easily and quickly build up a precision measuring instrument.



516-611

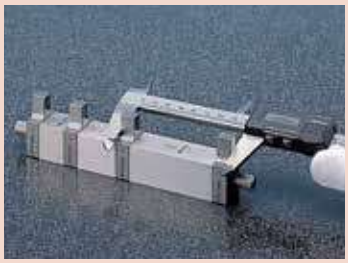

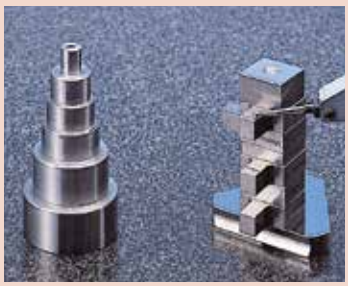

SPECIFICATIONS

Metric

Order No. 516-611	Included in set
2 pcs.	Half round jaw 2mm (**619070**)
2 pcs.	Half round jaw 5mm (**619071**)
2 pcs.	Plain jaw (**619072**)
1 pc.	Center point (**619073**)
1 pc.	Scriber point (**619054**)
1 pc.	Block base (**619074**)
2 pcs.	Flat head screw 1·1/4" (**619057**)
2 pcs.	Flat head screw 5/8" (**619058**)
2 pcs.	Slotted head nut (**619059**)
2 pcs.	Adjustable tie rod 6" (**619060**)
2 pcs.	Adjustable tie rod 4·1/2" (**619061**)
1 pc.	Tie rod 3" (**619062**)
1 pc.	Tie rod 2·1/4" (**619063**)
1 pc.	Tie rod 1·1/2" (**619064**)
1 pc.	Tie rod 3/4" (**619065**)
2 pcs.	Stud (**619056**)
2 pcs.	Knurled head screw (**619066**)

Inch

Order No. 516-612	Included in set
2 pcs.	Half round jaw .125" (**619050**)
2 pcs.	Half round jaw .25" (**619051**)
2 pcs.	Plain jaw (**619052**)
1 pc.	Center point (**619053**)
1 pc.	Scriber point (**619054**)
1 pc.	Block base (**619055**)
2 pcs.	Flat head screw 1·1/4" (**619057**)
2 pcs.	Flat head screw 5/8" (**619058**)
2 pcs.	Slotted head nut (**619059**)
2 pcs.	Adjustable tie rod 6" (**619060**)
2 pcs.	Adjustable tie rod 4·1/2" (**619061**)
1 pc.	Tie rod 3" (**619062**)
1 pc.	Tie rod 2·1/4" (**619063**)
1 pc.	Tie rod 1·1/2" (**619064**)
1 pc.	Tie rod 3/4" (**619065**)
2 pcs.	Stud (**619056**)
2 pcs.	Knurled head screw (**619066**)

Half round jaw:
Used to measure an inside or outside diameter.

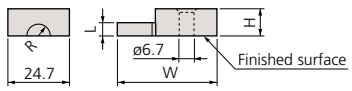

Order No.	R	L	W	H
619070	1.95mm	2mm	33.6mm	5.3mm
619071	4.95mm	5mm	39.9mm	10.3mm
619050	.123″	.125″	33.6mm	5.3mm
619051	.248″	.25″	39.9mm	10.3mm

Plain jaw: **619072** (10mm), **619052** (.5")
Used to measure an inside or outside diameter.

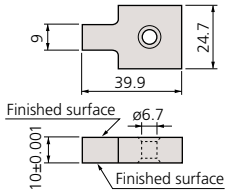

Center point: **619073** (2mm), **619053** (.1")
Used to scribe a workpiece.

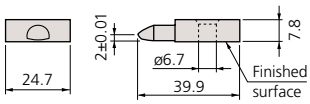

Scriber point: **619054**
Used to scribe a workpiece.

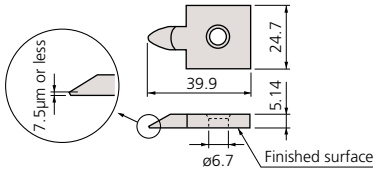

Base: **619074** (10mm), **619055** (.5")
Used as clamps by inserting them into the center hole of a square gage block.

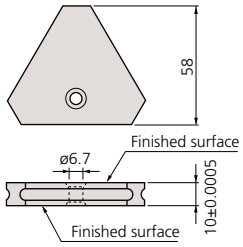

Stud: **619056**

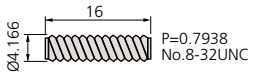

Flat head screw

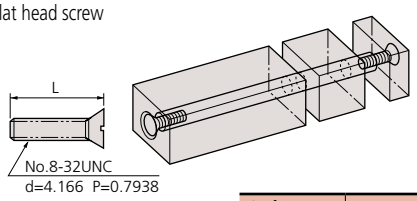

Order No.	L
619057	31.6mm
619058	15.8mm

Slotted head nut: **619059**

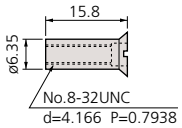

Knurled head screw: **619066**

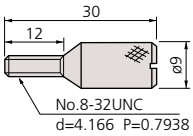

Tie rod

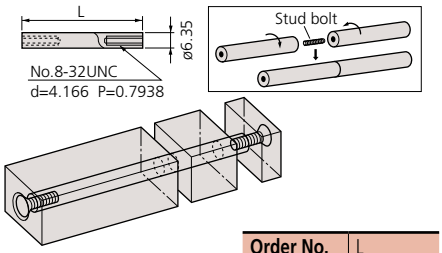

Order No.	L
619065	19mm
619064	38mm
619063	57mm
619062	76mm

Adjustable tie rod

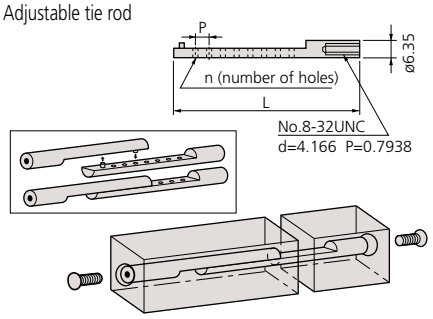

Order No.	L	P	n
619060	124.5mm	6.35mm	14
619061	86.5mm	6.35mm	8

Ceraston

Accessory for Gage Blocks

FEATURES

- Alumina-ceramic grinding stone for removing burrs from hard materials such as ceramics that ordinary grinding stones cannot handle.
- Can be used both for steel gage blocks and CERA Blocks.



601644 601645

SPECIFICATIONS

Order No.	Dimensions (W x D x H)	Mass
601645	100 x 25 x 12mm	110g
601644	150 x 50 x 20mm	530g



Removing burrs

(1) Wipe any dust and oil films from the gage block and the Ceraston (or Arkansas stone) using a solvent.
(2) Place the gage block on the Ceraston so that the measuring face that has burrs is on the abrasive surface of the stone. While applying light pressure, move the gage block to and fro about ten times (Fig. 1). Use a block rubber for thin gage blocks to apply even pressure (Fig. 2).
(3) Check the measuring face for burrs with an optical flat. If the burrs have not been removed, repeat step (2). If burrs are too large, they may not be removed with a grinding stone. If so, discard the gage block.

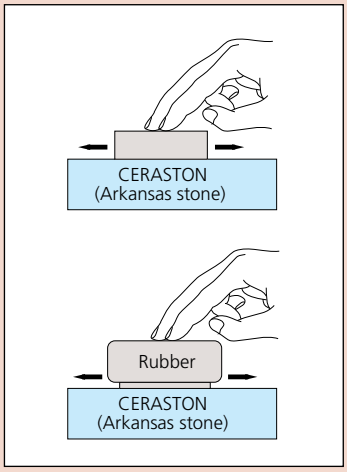

Note: The abrasive surface of a Ceraston must be made flat by lapping it from time to time. After lapping the Ceraston, the lapping powder must be completely removed from the surface to prevent the surface of the gage block from being scratched. Mitutoyo does not carry the Arkansas stone.

Maintenance Kit for Gage Blocks

SERIES 516

FEATURES

- Includes all necessary maintenance tools for daily care and storage of gage blocks.
- Supplied in a fitted wooden case for portable use.



516-650E

SPECIFICATIONS

Order No.	Assortment of tools and accessories
516-650E	Ceraston (**601645**): Used for removing burrs on the measuring surface.
	Optical flat (**158-117**): Used for checking whether burrs exist.
	Tweezers (**600004**): Used for handling thin gage blocks.
	Blower brush (**600005**): Used for blowing out dust on the measuring surface.
	Cleaning paper (**600006**): Used for wiping off rust preventive oil and contamination.
	Artificial leather mat (**600007**): Used as a gage block mat.
	Reagent bottle (**600008**): Bottle of wiping solution (100mL)
	Gloves



Step Master

SERIES 516

FEATURES

Step master is a master gage used for the z-axis (vertical direction) calibration of optical instruments.

- Each adjacent step is measured down to 0.01µm by using a interferometer within ±0.20µm allowance.
- Steel and ceramic types are available.



516-498
Ceramic type

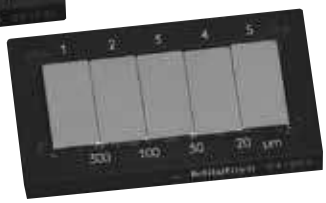

516-199
Steel type



Dimension

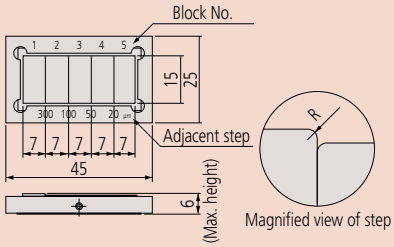

SPECIFICATIONS

Metric

Order No.	Step value between adjacent blocks				Remarks
	No. 1 - No. 2	No. 2 - No. 3	No. 3 - No. 4	No. 4 - No. 5	
516-198	10µm	5µm	2µm	1µm	Steel type
516-199	300µm	100µm	50µm	20µm	Steel type
516-498	10µm	5µm	2µm	1µm	Ceramic type
516-499	300µm	100µm	50µm	20µm	Ceramic type

Made-to-order Block & Reference

FEATURES

- Mitutoyo can provide gage blocks and reference gages to your size and design.



A: Ceramic rectangular gage block (21.94mm)
B: Ceramic square gage block (2.1005mm)
C: Steel square gage block (10.72mm)
D: Steel square gage block (2.2065mm)
E: Ceramic rectangular gage block (20.64mm)
F: Steel rectangular gage block (31.5mm)
G: Ceramic rectangular gage block (6.34mm)
H: Steel rectangular gage block (3.603mm)
I: Steel rectangular gage block (1.1505mm)
J: Steel rectangular gage block (0.555mm)
K: Steel rectangular gage block (6.156mm)
L: Steel rectangular gage block (9.694mm)
M: Steel rectangular gage block (10.02mm)

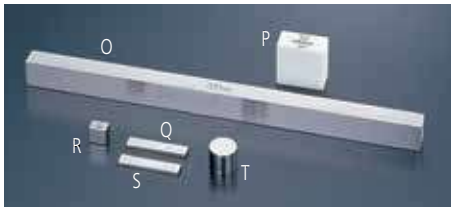

O: Steel long rectangular block (15 x 10 x 200mm)
P: Ceramic square block (24.1 x 24.1 x 12.3mm)
Q: Steel thin rectangular block (30 x 6 x 1.9mm)
R: Steel square block (9 x 9 x 6mm)
S: Steel thin rectangular block (30 x 6 x 2.1mm)
T: Steel cylindrical bock (ø13.08 x 12mm)



U: Cylindrical reference block for depth micrometer (ø60 x 150mm)
V: Ceramic reference plate (50 x 50 x 50mm, flatness 0.3µm)
W: Ceramic stepped block (30 x 18 x 5mm, step: 0.15mm)

Available Dimension

Nominal size: .004 to 20" / 0.1 to 1000mm (steel)
.1 to 20" / 0.5 to 500mm (ceramic)
Nominal pitch: 0.0005mm (up to 100mm)
0.001mm (over 100mm)
Minimum section dimension:
Approx. .24 x .24" / 6 x 6mm
Maximum section dimension:
Approx. 5.5 x 5.5" / 140 x 140mm (steel)
Approx. 6.3" Dia. / ø160mm (steel, cylindrical)
Approx. 3.94 x 1.97" / 100 x 50mm (ceramic)
Approx. .24" Dia. / ø60mm (ceramic, cylindrical)
Accuracy: Gage Block Grade level

Special materials of low expansion glass and low expansion ceramic are available.

Mitutoyo

Gage Block Comparator GBCD-250

SERIES 565 — Manual Comparator with Dual Gage Heads

FEATURES

- Gage blocks between 0.1mm and 250mm easily can be compared with the standard gage block on the GBCD-250.
- The differential dual gaging heads assure the operator of a high-accuracy measurement with ease of use.

SPECIFICATIONS

Inch/Metric

Model No.	GBCD-250
Order No.	**565-150A**
Range	0.1mm - 250mm / .004 - 10"
Resolution	0.000001mm(0.001µm)/.0000001in(.1µin)
Accuracy in narrow range (20°C)	±(0.03+0.3L/1000)µm* L = Gage block length (mm)
Measuring units	Laser Hologage (upper), Mu-checker (lower)
Operating condition	Temperature: 20°C ±1°C Humidity: 58%RH ±15%RH
Data output	Via SPC output port
Dimensions (W x D x H)	Main unit: 455 x 318 x 691mm Display unit: 345 x 397 x 187mm
Mass	Main unit: Approx. 50kg Display unit: Approx. 9kg

* 95% confidence interval (not including the calibration error of the standard gage block).



Optional Accessories

962723: Gage head calibration kit
02ASD130: Square gage block holder kit
02ASF040: Heat protection shield
02ASQ953: GBPAK-M (Included Software)
937179T: Foot Switch
936937: Connecting cable

Gage Block Comparator GBCD-100A

SERIES 565 — Automatic-Type Comparator with Dual Gage Heads

SPECIFICATIONS

Model No.	GBCD-100A
Order No.	**565-160A**
Resolution	0.00001mm (0.01µm) / .000001"
Range	0.5mm - 100mm / .02 - 4"
Measuring unit	Differential (dual-head) type Mu-Checker
Accuracy in narrow range (20°C)	±(0.03+0.3L/1000)µm* L = Gage block length (mm)
Measuring force	Upper gage head: 1N (100gf) Lower gage head: 0.6N (60gf)
Air requirement	400kPa (4kgf/cm^2)
Operating condition	Temperature: 20°C ±1°C Humidity: 58%RH ±15%RH
Dimensions (W x D x H)	Main unit: 710 x 366 x 783mm Electronic unit: 160 x 410 x 382mm
Mass	Main unit: 120kg Electronic unit: 14kg

* 95% confidence interval (not including the calibration error of the standard gage block).



The GBCD-100A Automatic Gage Block Comparator is an easy-to-operate dual-head gage block inspecting system. It automatically compares workpieces with a standard gage block and determines accuracies such as central length, maximum length, minimum length and parallelism through the operation of an optional personal computer.

Standard Accessories

GBPAK-A (software)

Optional Accessories

516-146-E1: Gage block set for GBCD calibration

Height Master

SERIES 515

PROPRIETARY INSPECTION CERTIFICATE

Mitutoyo guarantees the product quality

Technical Data

Graduation:	.00001" or 0.001mm
Counter Resolution:	.001" or 0.01mm
Character Height:	.16" / 4mm
Micrometer Head	
Travel stroke:	1" or 20mm
Pitch:	.025"/rev or 0.5mm/rev
Hysteresis:	.00004" or 1µm

Provided with inspection certificate.

Standard Accessories

Reference Block: 11mm for 515-322
Reference Block: .3" for 515-310, 515-311

Optional Accessories

515-112: Auxiliary block kit for bore gage (mm)
515-119: Auxiliary block kit for bore gage (for **515-310**)
515-121: Auxiliary block kit for bore gage (for **515-311**)
———: Riser block

Reading

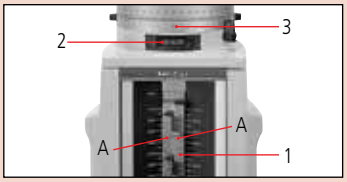

Height A

1. Scale	280.	mm
2. Counter	5.67	mm
3. Thimble	0.000	mm
	285.670	mm



FEATURES

- Models with staggered arrangement of block stack have two measuring faces on the same level, one facing up and the other down (except for **515-310**).
- Each height master is supplied with a gage block for zero-setting.
- Supplied in fitted wooden case.



515-322



515-310

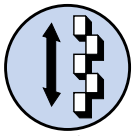

Staggered 20mm blocks (movable)

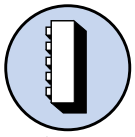

Vertical orientation

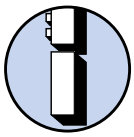

Riser block

SPECIFICATIONS

Metric

Range (H)	Order No.	Block step	Graduation	Block Pitch Accuracy	Parallelism of Block	Micrometer Head Accuracy	Mass (kg)
5 < H ≤ 310mm	**515-322**	20mm (staggered)	0.001mm	±1.5µm	1µm	±1µm	23

Inch

Range (H)	Order No.	Block step	Graduation	Block Pitch Accuracy	Parallelism of Block	Micrometer Head Accuracy	Mass (kg)
.2" < H ≤ 12.2"	**515-310**	.5" (straight)	.00001"	±.00005"	.00004"	±.00005"	23
.2" < H ≤ 12.2"	**515-311**	1" (staggered)	.00001"	±.00005"	.00004"	±.00005"	23

Mitutoyo

Digital Height Master
SERIES 515

FEATURES

- Standard model with a digital display, featuring all essential specifications required for versatile height standard.
- With SPC output.
- Each height master is supplied with a gage block for zero setting.



515-374

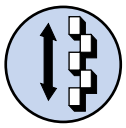

Staggered 20mm blocks (movable)

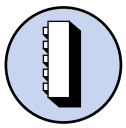

Vertical orientation

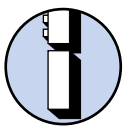

Riser block



PROPRIETARY INSPECTION CERTIFICATE

SPC

Technical Data

Resolution (LCD):	.0001" or 0.001mm
Graduation:	.0001" or 0.002mm
Character Height	.21" / 5.4mm
Micrometer Head	
Travel Stroke:	1" or 20mm
Pitch:	.025"/rev or 0.5mm/rev
Hystersis:	.0001" for all inch models 0.002mm for 300mm models 0.0025mm for 450 & 600mm models
Battery:	SR44 (2 pcs.), **938882**
Battery life:	Approx. 1.8 years under normal use

Function

Zero-setting, Presetting, ABS/INC switching, Data hold, Data output, inch/mm conversion (on inch/metric models only)
Alarm: Low voltage, Counting value composition error

Standard Accessories

Reference Block: 11mm for Metric Height Master **611621-031**
Reference Block: .6" for for Inch Height Master **611196-531**
Provided with inspection certificate.

Optional Accessories

515-111: Auxiliary block kit for bore gage (mm)
515-120: Auxiliary block kit for bore gage (inch)
———: Riser block (see page E-27.)
959149: SPC cable (40" / 1m)
959150: SPC cable (80" / 2m)
050019: Fitted mahogany case for 12" / 300mm model
050059: Fitted mohogany case for 18" / 450mm model
24" / 600mm model

SPECIFICATIONS

Metric

Range (H)	Order No.	Block step	Resolution	Block Pitch Accuracy	Parallelism	Micrometer Head Accuracy	Mass (kg)
10 < H ≤ 310mm	**515-374**	20mm (staggered)	0.001mm	±1.5µm	2µm	±2µm	9.5
10 < H ≤ 460mm	**515-376**	20mm (staggered)	0.001mm	±2.5µm	2.5µm	±2µm	13.6
10 < H ≤ 610mm	**515-378**	20mm (staggered)	0.001mm	±3.5µm	2.5µm	±2.5µm	16.0

Inch/Metric

Range (H)	Order No.	Block step	Resolution	Block Pitch Accuracy	Parallelism	Micrometer Head Accuracy	Mass (kg)
.5" < H ≤ 12"	**515-375**	1" (staggered)	.0001" / 0.001mm	±.0001"	.00005"	±.0001"	9.5
.5" < H ≤ 18"	**515-377**	1" (staggered)	.0001" / 0.001mm	±.0001"	.0001"	±.0001"	13.6
.5" < H ≤ 24"	**515-379**	1" (staggered)	.0001" / 0.001mm	±.0001"	.0001"	±.0001"	16.0

Riser Blocks

SERIES 515

FEATURES

- These riser blocks are specially designed for standard/digimatic height masters.

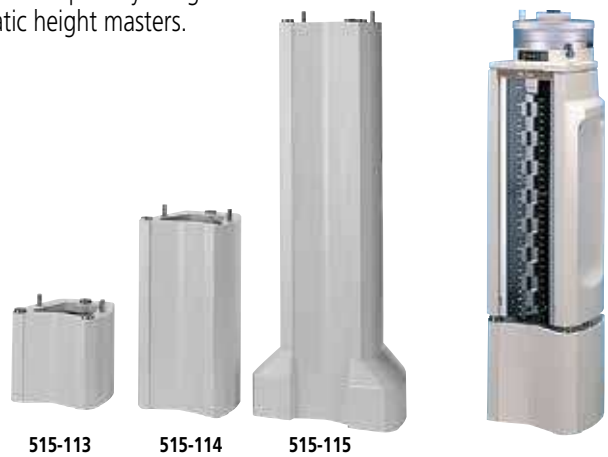

515-113 515-114 515-115

SPECIFICATIONS

Metric

Height	Order No.	Accuracy of height	Mass (kg)
150mm	**515-113**	±0.6µm	5.7
300mm	**515-114**	±1.0µm	11.3
600mm	**515-115**	±2.0µm	31

Inch

Height	Order No.	Accuracy of height	Mass (kg)
6″	**515-116**	±20µin	5.7
12″	**515-117**	±40µin	11.3
24″	**515-118**	±80µin	31

Auxiliary Block Kit

SERIES 515 — for Bore Gage

FEATURES

- Used for efficient zero-setting of dial bore gages and tubular inside micrometers (18 - 150mm) on a Height Master.



515-112

Bore gage zero-setting



SPECIFICATIONS

Metric

Order No.	Applicable height master
515-110	Universal Height Master
515-111	Digimatic Height Master
515-112	Height Master

Inch

Order No.	Applicable height master
515-119	Universal Height Master, Height Master (**515-310**)
515-120	Digimatic Height Master
515-121	Height Master (**515-311**)

Mitutoyo

Universal Height Master

SERIES 515 — Use in Vertical and Horizontal Orientation

FEATURES

- The Universal Height Master is designed for both vertical and horizontal orientations, providing a wide range of applications, such as accuracy checking of machine tool table movements.
- Fitted wooden case supplied.



515-520

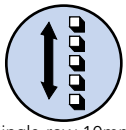

Single-row 10mm blocks (movable)

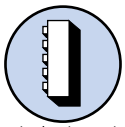

Vertical orientation

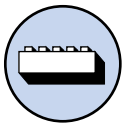

Horizontal orientation

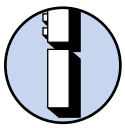

Riser block

SPECIFICATIONS

Metric

Range (R)	Order No.	Block step	Graduation	Block Pitch Accuracy	Parallelism of Block	Micrometer Head Accuracy	Mass (kg)
5 < R ≤ 610mm	**515-520**	10mm (straight)	0.001mm	±1.5μm	1.0μm	±1.2μm	42
5 < R ≤ 1010mm	**515-523**	10mm (straight)	0.001mm	±3.5μm	2.5μm	±1.5μm	63.5

Inch

Range (R)	Order No.	Block step	Graduation	Block Pitch Accuracy	Parallelism of Block	Micrometer Head Accuracy	Mass (kg)
.2″ < R ≤ 18.2″	**515-512**	.5″ (straight)	.00001″	±.00005″	.00006″	±.00004″	42
.2″ < R ≤ 24.2″	**515-510**	.5″ (straight)	.00001″	±.0001″	.00006″	±.00004″	50
.2″ < R ≤ 40.2″	**515-513**	.5″ (straight)	.00001″	±.00015″	.00008″	±.00006″	63.5



Technical Data

Graduation:	0.001mm or .00001"
Counter Resolution:	.001″ or 0.01mm
Character Height:	.16″ / 4mm
Block arrangement:	Straight arrangement
Micrometer Head	
Travel stroke:	1" or 20mm
Pitch:	.025"/rev or 0.5mm/rev
Hysteresis:	.00004″ / 1.2μm up to 24.2″ / 610mm .00006″ / 1.5μm for 40.2″ / 1010mm
Block pitch accuracy:	±1.5μm (0 < R ≤ 310mm) ±2.5μm (310 < R ≤ 610mm) ±3.5μm (610 < R ≤ 1010mm)
Parallelism of blocks:	1.0μm (0 < R ≤ 310mm) 2.5μm (310 < R ≤ 1010mm)

Provided with inspection certificate.

Optional Accessories

900574*: Supporting base for vertical operation
Mass: 3kg
(*supplied as a standard for **515-523** and **515-513**)
515-112: Auxiliary block kit for bore gage (mm)
515-119: Auxiliary block kit for bore gage (inch)



Using in horizontal orientation

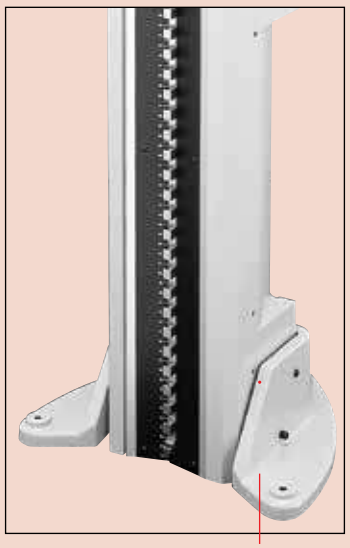

Supporting base

High-Accuracy Check Master HMC-H

SERIES 515

FEATURES

- Designed to check the accuracy of table movements of machine tools and calibrate CMMs. Permanently wrung stack of gage blocks is housed in a rigid frame.
- Can be used in either vertical and horizontal orientation.
- Fitted wooden case supplied.

Specifications for Ceramic Check Master:

- Each measuring block is made of zirconia-based ceramic that requires no anti-corrosion treatment for measuring faces.
- Free from deterioration and dimensional changes over time.

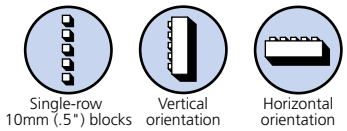

Technical Data

Measuring range (R): Refer to the list of specifications.
Block pitch accuracy: ±1.2µm (0 < R ≤ 310mm)
±1.8µm (310 < R ≤ 610mm)
±2.5µm (610 < R ≤ 1010mm)
±4.0µm (1010 < R ≤ 1510mm)
Parallelism of blocks: 1.0µm (0 < R ≤ 450mm)
1.5µm (450 < R ≤ 1010mm
2.0µm (1010 < R ≤ 1510mm)
Provided with inspection certificate.

SPECIFICATIONS

Metric

Range (R)	Order No.		Pitch		Accuracy of block pitch for the range shown below as measured from the bottom block				Length	Parallelism	Mass (kg)
	Steel	Ceramic	P	P	up to 300mm	300-600mm	600-1000mm	1000-1500mm			
300mm	515-740	515-760	20mm	10mm	±1.2µm	—	—	—	331mm	1µm	3.6
450mm	515-741	515-761	20mm	10mm	±1.2µm	±1.8µm	—	—	482mm	1µm	5.4
600mm	515-742	515-762	20mm	10mm	±1.2µm	±1.8µm	—	—	631mm	1.5µm	7.2
1000mm	515-743	515-763	20mm	10mm	±1.2µm	±1.8µm	±2.5µm	—	1037mm	1.5µm	12.0
1500mm	515-744	515-764	20mm	10mm	±1.2µm	±1.8µm	±2.5µm	±4.0µm	1546mm	2µm	18.0

Inch

Range (R)	Order No.		Pitch		Accuracy of block pitch for the range shown below as measured from the bottom block				Length	Parallelism	Mass (kg)
	Steel	Ceramic	P	P	up to 12″	12-24″	24-40″	40-60″			
12″	515-730	515-750	1″	.5″	±50µin	—	—	—	13.0″	40µin	3.4
18″	515-731	515-751	1″	.5″	±50µin	±70µin	—	—	19.0″	40µin	5.2
24″	515-732	515-752	1″	.5″	±50µin	±70µin	—	—	25.0″	60µin	6.9
40″	515-733	515-753	1″	.5″	±50µin	±70µin	±100µin	—	41.0″	60µin	11.5
60″	515-734	515-754	1″	.5″	±50µin	±70µin	±100µin	±158µin	61.5″	80µin	17.3

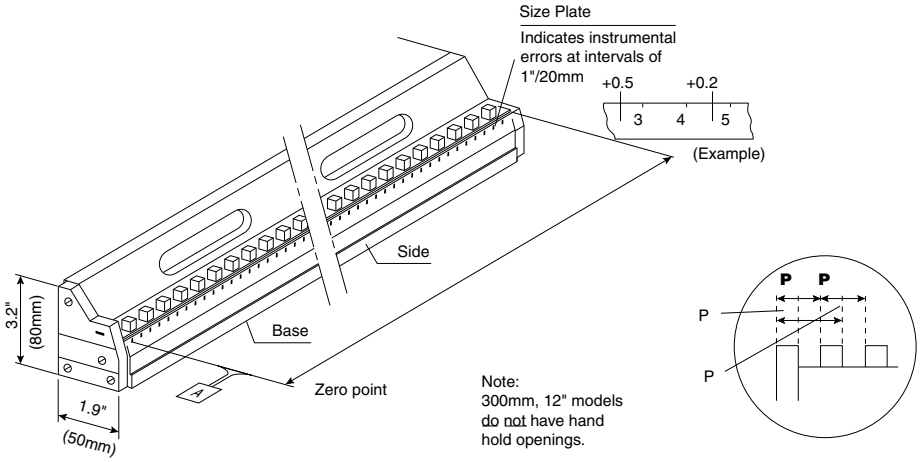

Optional Accessories

601167: Supporting base for vertical operation
(*supplied as a standard for **515-523** and **515-513**)

Dimensions: 14.2"(W) x 8.7"(D) x 8.3"(H)
360mm(W) x 220mm(D) x 210mm(H)

Mass: 3kg

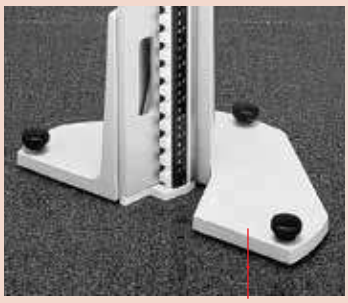

Supporting base

CERA Straight Master SM-C

SERIES 311 — Straightness Measuring Instrument

FEATURES

CERA Straight master is a master gage used for the straightness inspection of each axis movement such as a CMM, machine tool, semiconductor-related equipment and form measuring machine.

- Made from Alumina-ceramic
- 50mm/2″ pitch gradation scales
- Precision-lapped measuring surface
- Double-faced type is lapping the double face, which can be used for straightness in horizontal and vertical as a reference square.
- Lightweight
- Supplied with fitted wooden case.





SPECIFICATIONS

Metric

Nominal length	Order No.*
400mm	**311-302-33**
700mm	**311-305-33**
1000mm	**311-307-33**
1300mm	**311-309-33**

Inch High-accuracy model

Nominal length	Order No.*
16″	**311-322-33**
28″	**311-325-33**
40″	**311-327-33**
52″	**311-329-33**

Straightness	Size (L x H x W)	Mass
0.3µm	440 x 35 x 50mm	1.8kg
0.5µm	740 x 35 x 50mm	3kg
1.0µm	1040 x 45 x 80mm	8kg
1.5µm	1340 x 45 x 80mm	10kg

Metric

Nominal length	Order No.*
400mm	**311-332-33**
700mm	**311-335-33**
1000mm	**311-337-33**
1300mm	**311-339-33**

Inch Ultra-high accuracy model

Nominal length	Order No.*
16″	**311-342-33**
28″	**311-345-33**
40″	**311-347-33**
52″	**311-349-33**

Straightness	Size (L x H x W)	Mass
0.2µm	440 x 35 x 50mm	1.8kg
0.4µm	740 x 35 x 50mm	3kg
0.5µm	1040 x 45 x 80mm	8kg
0.7µm	1340 x 45 x 80mm	10kg

Double-faced type



SPECIFICATIONS

Metric

Nominal length	Order No.*
400mm	**311-352-33**
700mm	**311-355-33**
1000mm	**311-357-33**
1300mm	**311-359-33**

Inch Double-faced model

Nominal length	Order No.*
16″	**311-362-33**
28″	**311-365-33**
40″	**311-367-33**
52″	**311-369-33**

Straightness	Size (L x H x W)	Mass
0.3µm	440 x 45 x 80mm	3.2kg
0.5µm	740 x 45 x 80mm	5.5kg
1.0µm	1040 x 45 x 80mm	8kg
1.5µm	1340 x 45 x 80mm	10kg

Technical Data

Provided with inspection certificate.

Cross section

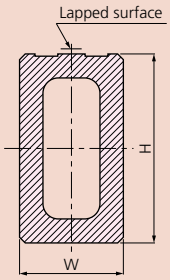

Double-faced type

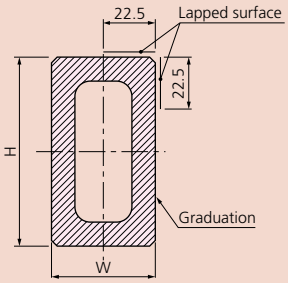

Square Master

SERIES 311 — Squareness / Straightness Measuring Instrument

Technical Data

Squareness:	Refer to the list of specifications
Straightness:	Refer to the list of specifications
Dial test indicator provided	
Range:	0.2mm
Graduation:	0.002mm
Accuracy:	3µm

FEATURES

- Squareness (perpendicularity) and straightness measurements can be performed accurately and efficiently by moving a lever.
- With a dial test indicator for reading displacements.
- Its own squareness is adjustable for high-accuracy measurement.



311-215



311-225



311-245

Optional Accessory

———: Riser blocks (see page E-27.)*
900571: Adjustable holder
900551: Extension holder
900565: Feeler**

*Not available for 450mm model.
Adapter (902803**) is required for metric model.

Adjustable holder

No.900571

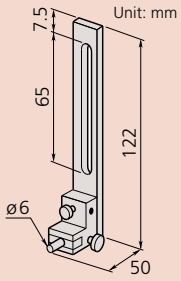



Extension holder

No.900551

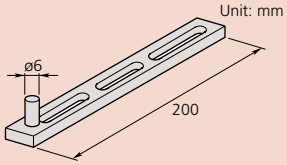

Feeler

No.900565

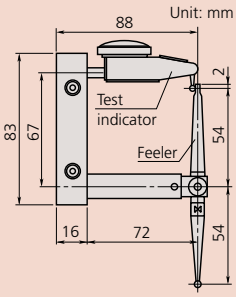



SPECIFICATIONS

Metric

Vertical travel	Order No.	Squareness	Straightness	Mass (kg)
150mm	**311-215**	3µm	2µm	13.7
250mm	**311-225**	6µm	2.5µm	16.2
450mm	**311-245**	9µm	3.5µm	24

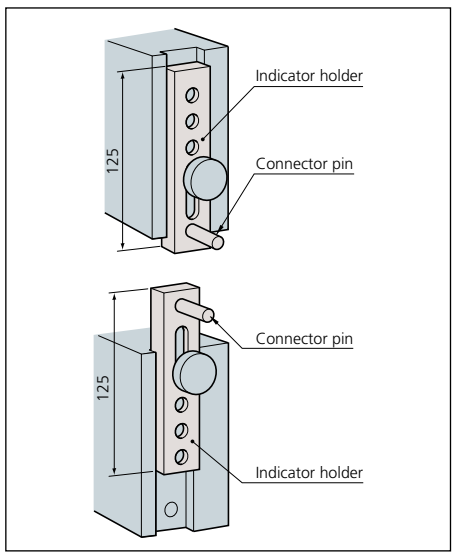



Mitutoyo

Standard Scales

SERIES 182 — Made of Low-Expansion Glass

FEATURES

- High-precision glass scales manufactured under Mitutoyo's leading-edge Linear Scale production technology.
- High accuracy is guaranteed to be used as a standard for calibrating graduated scales.

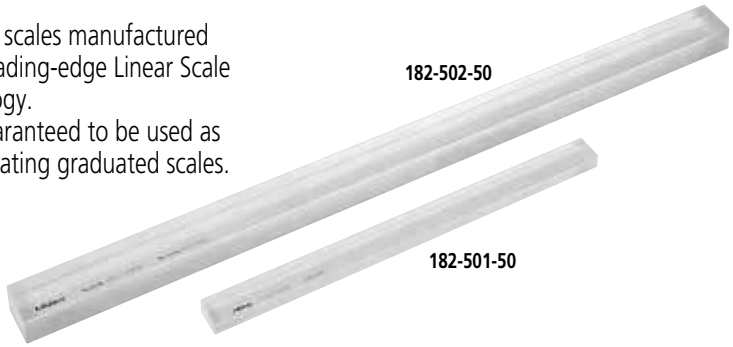

DIMENSIONS

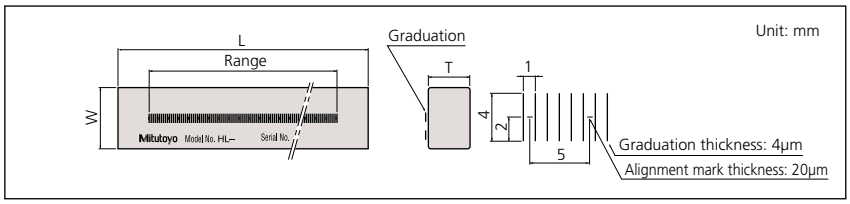

Technical Data

Accuracy (at 20°C): (0.5+L/1000)µm,
L = Measured length (mm)
Glass material: Low expansion glass
Thermal expansion coefficient: $8x10^{-8}$/K
Graduation: 1mm
Graduation thickness: 4µm
Mass: 0.75kg (250mm), 1.8kg (500mm)

SPECIFICATIONS

Metric

Range	Order No.	L	W	T
250mm	**182-501-50**	280mm	20mm	10mm
250mm	**182-501-60***	280mm	20mm	10mm
500mm	**182-502-50**	530mm	30mm	20mm
500mm	**182-502-60***	530mm	30mm	20mm

*with English JCSS certificate.

Working Standard Scales

SERIES 182

FEATURES

- High-precision glass scales manufactured under Mitutoyo's leading-edge linear scale production technology.
- Ideal for checking magnification accuracy of profile projectors and microscopes, and the table feeding accuracy of measuring equipment.

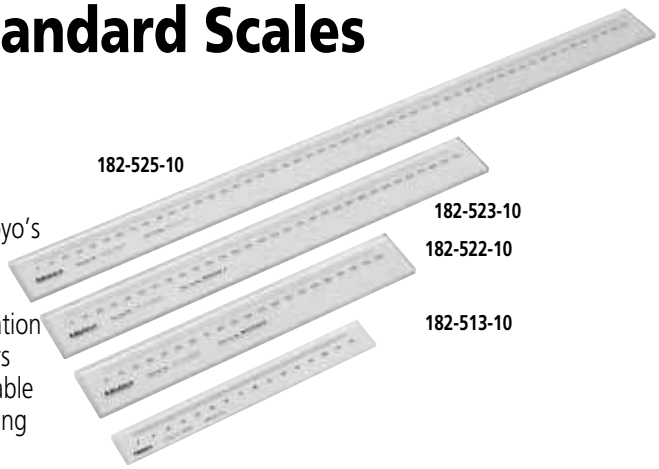

DIMENSIONS

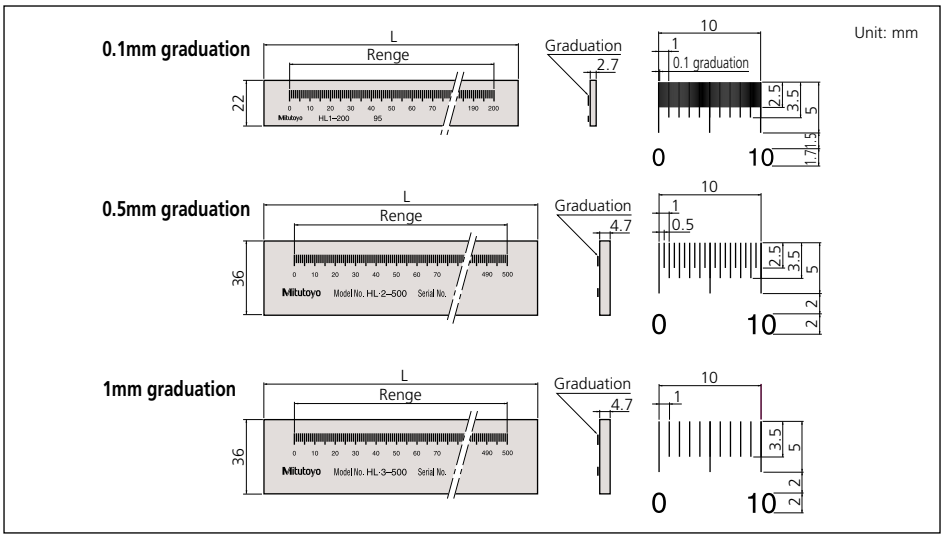

Technical Data

Accuracy (at 20°C): (1.5+2L/1000)µm,
L = Measured length (mm)
Glass material: Sodium glass
Thermal expansion coefficient: $8.5x10^{-6}$/K
Graduation: 0.1mm (thickness: 20µm)
0.5mm (thickness: 50µm)
1mm (thickness: 100µm)

SPECIFICATIONS

Metric

Range	Order No.	Graduation	L	Mass
50mm	**182-511-10**	0.1mm	75mm	0.23kg
100mm	**182-512-10**	0.1mm	125mm	0.24kg
150mm	**182-513-10**	0.1mm	175mm	0.35kg
200mm	**182-514-10**	0.1mm	225mm	0.36kg
100mm	**182-521-10**	0.5mm	130mm	0.27kg
200mm	**182-522-10**	0.5mm	230mm	0.32kg
300mm	**182-523-10**	0.5mm	330mm	0.57kg
400mm	**182-524-10**	0.5mm	430mm	0.71kg
500mm	**182-525-10**	0.5mm	530mm	0.86kg
250mm	**182-531-10**	1mm	280mm	0.55kg
500mm	**182-532-10**	1mm	530mm	0.86kg
750mm	**182-533-10**	1mm	780mm	1.22kg
1000mm	**182-534-10**	1mm	1030mm	1.54kg

High-Precision Square

SERIES 311

FEATURES

The High-Precision Square gage is used for inspecting the travel straightness and axial perpendicularity of moving elements on equipment, such as machine tools, CMMs, form measuring machines and semiconductor-related equipment.

- Four precision-lapped reference surfaces.
- Better than 1µm/300mm straightness and perpendicularity.



311-111



311-112



311-113

SPECIFICATIONS

Metric

Order No.	Dimension (W x L x T)	Mass
311-111	90 x 110 x 25mm	1.5kg
311-112	160 x 210 x 25mm	5.0kg
311-113	260 x 310 x 30mm	14.0kg

* 311-113 is supplied with a removable handle.

Spring Dividers and Calipers

SERIES 950

FEATURES

- Spring Divider — Fully hardened and tempered joints, spring, washers and divider points.
- Outside Spring Caliper — Contact ends fully rounded to give accurate dimensions.
- Inside Spring Caliper — Ends fully rounded to give accurate contact with a workpiece.



Spring divider



Outside spring calipers



Inside spring calipers

SPECIFICATIONS

Range	Order No.		
	Spring divider	Outside spring calipers	Inside spring calipers
6" (150mm)	**950-212**	**950-222**	**950-232**
8" (200mm)	**950-213**	**950-223**	**950-233**

Combination Square Set

SERIES 180

FEATURES

- Measuring heads are attached to the graduated steel rule (blade), allowing versatile measurements on various types of workpieces.
- The measuring heads come hardened or cast iron-not hardened.
- Economy sets without a protractor head are available.

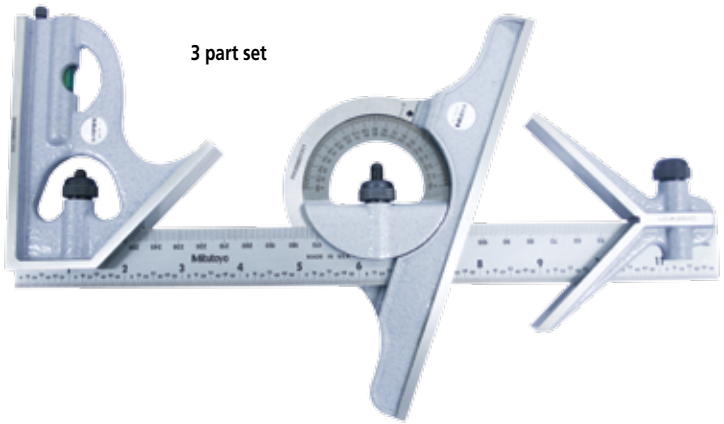

3 part set

Technical Data

Square head: Used to set the rule at 90 degrees or 45 degrees to an edge of a workpiece.
Center head: Used to locate centers of round workpieces.
Protractor head: Used to set the rule at a desired angle to an edge of a workpiece. Also used for measuring angles.

SPECIFICATIONS

Head Only Hardened

Order No.	Description
180-102B	Square Head for 12"/300mm to 24"/600mm
180-202B	Center Head for 12"/300mm to 24"/600mm

Head Only Cast iron-not hardened

Order No.	Description
180-112B	Square Head for 12"/300mm to 24"/600mm
180-212B	Center Head for 12"/300mm to 24"/600mm
180-301B	Protractor Head for 12"/300mm to 24"/600mm

Inch/Metric Hardened Combination Square Sets

Set No.	Blade			Square Head	Center Head	Protractor Head
	Size	Type				
180-903B	12"	4R	180-501B	180-102B	180-202B	-
180-905B	12"	4R	180-501B	180-102B	180-202B	180-301B*
180-906B	12"	16R	180-502B	180-102B	180-202B	180-301B*
180-907B	12"/300mm	E/M	180-503B	180-102B	180-202B	180-301B*
180-910B	300mm	Metric	180-505B	180-102B	180-202B	180-301B*

*Cast iron-not hardened

Inch/Metric Cast iron-not hardened Combination Square Sets

Set No.	Blade			Square Head	Center Head	Protractor Head
	Size	Type				
180-803B	12"	4R	180-501B	180-112B	180-212B	-
180-805B	12"	4R	180-501B	180-112B	180-212B	180-301B

Inch / Metric Blades only

Order No.	Length	Graduations	Accuracy (length)
180-501B	12"	8, 16, 32, 64ths (4R)	+.005" / -.0035" (+0.13mm / -0.09mm)
180-502B	12"	32, 64, 50, 100ths (16R)	
180-503B	12" x 300mm	32, 64ths, 1, 0.5mm	
180-505B	300mm	1, .5, 1, 0.5mm	+.006" / -.0035" (+0.15mm / -0.09mm)
180-701B	18"	8, 16, 32, 64ths (4R)	
180-703B	18" x 450mm	32, 64ths, 1, 0.5mm	
180-601B	24"	8, 16, 32, 64ths (4R)	+.007" / -.0035" (+0.18mm / -0.09mm)
180-603B	24" x 600mm	32, 64ths, 1, 0.5mm	

Steel Rules

SERIES 182

FEATURES

- Clear graduations on satin-chrome finish.
- Stainless tempered.



182-125

SPECIFICATIONS

Wide Rigid Rules (thickness 3/64")

Order No.	Size	Graduations				Width	Accuracy (Length)
182-101	6″(4R)	1/8	1/16	1/32	1/64th	3/4″	
182-102	6″(16R)	1/32	1/64	1/50	1/100th	3/4″	
182-103	6″(5R)	1/32	1/64	1/10	1/100th	3/4″	
182-104	6″(3R)	1/32	1/64	1/10	1/50th	3/4″	+.004″ / –.0035″
182-105	6″ x 150mm	1/32	1/64	1mm	0.5mm	3/4″	(+0.1mm / –0.09mm)
182-106	6″ x 150mm	1/50	1/100	1mm	0.5mm	3/4″	
182-107	6″ x 150mm	1/10	1/100	1mm	0.5mm	3/4″	
182-108	6″ x 150mm	1/10	1/50	1mm	0.5mm	3/4″	
182-111	150mm	1mm	0.5mm	1mm	0.5mm	19mm	
182-121	12″(4R)	1/8	1/16	1/32	1/64th	1″	
182-122	12″(16R)	1/32	1/64	1/50	1/100th	1″	
182-123	12″(5R)	1/32	1/64	1/10	1/100th	1″	+.005 / –.0035″
182-124	12″(3R)	1/32	1/64	1/10	1/50th	1″	(+0.13mm / –0.09mm)
182-125	12″ x 300mm	1/32	1/64	1mm	0.5mm	1″	
182-126	12″ x 300mm	1/50	1/100	1mm	0.5mm	1″	
182-131	300mm	1mm	0.5mm	1mm	0.5mm	25mm	
182-241	18″(4R)	1/8	1/16	1/32	1/64	13/16″	
182-142	18″(16R)	1/32	1/64	1/50	1/100th	13/16″	
182-143	18″(5R)	1/32	1/64	1/10	1/100th	13/16″	+.006" / -.035"
182-145	18″ x 450mm	1/32	1/64	1mm	0.5mm	13/16″	(+0.15mm / -0.09mm)
182-151	450mm	1mm	0.5mm	1mm	0.5mm	30mm	
182-161	24″(4R)	1/8	1/16	1/32	1/64	13/16″	
182-162	24″(16R)	1/32	1/64	1/50	1/100th	13/16″	
182-163	24″(5R)	1/32	1/64	1/10	1/100th	13/16″	+.007″ / –.0035″
182-165	24″ x 600mm	1/32	1/64	1mm	0.5mm	13/16″	(+0.18mm / –0.09mm)
182-171	600mm	1mm	0.5mm	1mm	0.5mm	30mm	

Mitutoyo

Steel Rules

SERIES 182

FEATURES

- Clear graduations on satin-chrome finish.
- Stainless tempered.



182-265

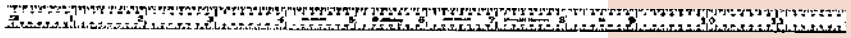

182-223

SPECIFICATIONS

Full-Flexible Rules (thickness 1/64")

Order No.	Size	Graduations				Width	Accuracy (Length)
182-201	6″(4R)	1/8	1/16	1/32	1/64th	1/2″	
182-202	6″(16R)	1/32	1/64	1/50	1/100th	1/2″	
182-203	6″(5R)	1/32	1/64	1/10	1/100th	1/2″	
182-204	6″(3R)	1/32	1/64	1/10	1/50th	1/2″	+.004″ / –.0035″
182-205	6″ x 150mm	1/32	1/64	1mm	0.5mm	1/2″	(+0.1mm / –0.09mm)
182-206	6″ x 150mm	1/50	1/100	1mm	0.5mm	1/2″	
182-207	6″ x 150mm	1/10	1/100	1mm	0.5mm	1/2″	
182-208	6″ x 150mm	1/10	1/50	1mm	0.5mm	1/2″	
182-211	150mm	1mm	0.5mm	1mm	0.5mm	12mm	
182-221	12″(4R)	1/8	1/16	1/32	1/64th	1/2″	
182-222	12″(16R)	1/32	1/64	1/50	1/100th	1/2″	
182-223	12″(5R)	1/32	1/64	1/10	1/100th	1/2″	+.005″ / –.0035″
182-224	12″(3R)	1/32	1/64	1/10	1/50th	1/2″	(+0.13mm / –0.09mm)
182-225	12″ x 300mm	1/32	1/64	1mm	0.5mm	1/2″	
182-226	12″ x 300mm	1/50	1/100	1mm	0.5mm	1/2″	
182-231	300mm	1mm	0.5mm	1mm	0.5mm	12mm	
182-141	18″(4R)	1/8	1/16	1/32	1/64	3/4″	
182-242	18″(16R)	1/32	1/64	1/50	1/100th	3/4″	+.006″ / -.0035″
182-243	18″(5R)	1/32	1/64	1/10	1/100th	3/4″	(+0.15mm / -0.09mm)
182-245	18″ x 450mm	1/32	1/64	1mm	0.5mm	3/4″	
182-251	450mm	1mm	0.5mm	1mm	0.5mm	18mm	
182-261	24″(4R)	1/8	1/16	1/32	1/64	3/4″	
182-262	24″(16R)	1/32	1/64	1/50	1/100th	3/4″	
182-263	24″(5R)	1/32	1/64	1/10	1/100th	3/4″	+.007″ / –.0035″
182-264	24″(3R)	1/32	1/64	1/10	1/50th	3/4″	(+0.18mm / –0.09mm)
182-265	24″ x 600mm	1/32	1/64	1mm	0.5mm	3/4″	
182-271	600mm	1mm	0.5mm	1mm	0.5mm	18mm	

Semi-Flexible Rules

SERIES 182

FEATURES

- Engraved on frontside only

SPECIFICATIONS



Inch/Metric

Order No.	Size	Graduations					Width	Accuracy (Length)
182-301	4″ x 100mm	1/2mm	1mm	1/32	1/64	1/16th	5/8″	+.004″ / –.0035″
182-302	6″ x 150mm	1/2mm	1mm	1/32	1/64	1/16th	5/8″	(+0.1mm / –0.09mm)
182-303	8″ x 200mm	1/2mm	1mm	1/32	1/64	1/16th	5/8″	+.005″ / –.0035″
182-305	12″ x 300mm	1/2mm	1mm	1/32	1/64	1/16th	5/8″	+0.13mm / –0.09mm)
182-307	20″ x 500mm	1/2mm	1mm	1/32	1/64	1/16th	5/8″	+.007″ / –.0035″ (+0.18mm / –0.09mm)
182-309	40″ x 1000mm	1/2mm	1mm	1/32	1/64	1/16th	5/8″	+.008″/–.004″ (+0.2mm / –0.1mm)

Thickness Gages

SERIES 950, 184

FEATURES

- Each leaf is marked with its thickness.
- Each leaf is detachable.



184-303S

Technical Data

Accuracy of Leaves Thickness

Nominal Thickness	Tolerance
Metric	
0.01mm to less than 0.06mm:	±0.003mm
0.06mm to less than 0.10mm:	±0.004mm
0.10mm to less than 0.35mm:	±0.005mm
0.35mm to less than 0.65mm:	±0.008mm
0.65mm to less than 3.0mm:	±0.01mm
Inch	
.0015 to less than .007":	±.0002"
.007 to less than .015":	±.0003"
.015 to less than .025":	±.0004"
.026 to less than .030":	±.00045"
.031 to less than .040":	±.0005"
.041 to less than .075":	±.00055"
.076 to less than .100":	±.0006"
.101 to less than .200":	±.00065"
.200" and over :	±.00075"

SPECIFICATIONS

Inch

Range	Order No.	Type of Blade	Blade Length	Composition of leaves
.002″ - .035″ (26 leaves)	**950-251**	Straight 1/2″ width	3″	.002 thru .018″ by .001″ step plus .022, .024, .025, .028, .030, .032, .035″
.0015″ - .025″ (26 leaves)	**950-252**	Tapered 1/4″ width at tip	3″	.002 thru .025″ by .001″ step plus .0015, .0025″
.0015″ - .200″ (15 leaves)	**950-254**	Straight 1/2″ width	3″	.0015, .002, .003, .004, .006, .008, .010, .012, .015, .020, .030, .040, .075, .100, .200″
.0015″ - .200″ (13 leaves)	**950-255**	Straight 1/2″ width	4 .5″	.0015, .002, .003, .004, .006, .008, .010, .020, .030, .040, .075, .100, .200″
.0015″ - .015″ (8 leaves)	**950-256**	Straight 1/2″ width	6″	.0015, .002, .003, .004, .008, .010, .012, .015″

Metric

Range	Order No.	Type of Blade	Blade Length	Composition of leaves
0.05 - 1mm	**184-313S**	Straight 13mm width	100mm	28 leaves: 0.05 - 0.15mm by 0.01mm, 0.2 - 1mm by 0.05mm
	184-303S		150mm	28 leaves: 0.05 - 0.15mm by 0.01mm, 0.2 - 1mm by 0.05mm
0.05 - 1mm	**184-304S**	Straight 13mm width	150mm	20 leaves: 0.05 - 1mm by 0.05mm
0.05 - 1mm	**184-305S**	Straight 13mm width	100mm	13 leaves: 0.05 - 0.3mm by 0.05mm, 0.4 - 1mm by 0.1mm
	184-301S		150mm	13 leaves: 0.05 - 0.3mm by 0.05mm, 0.4 - 1mm by 0.1mm
0.05 - 0.8mm	**184-306S**	Straight 13mm width	100mm	10 leaves: 0.05 - 0.2mm by 0.05mm, 0.3 - 0.8mm by 0.1mm
	184-308S		150mm	10 leaves: 0.05 - 0.2mm by 0.05mm, 0.3 - 0.8mm by 0.1mm
0.03 - 0.5mm	**184-307S**	Straight 13mm width	100mm	13 leaves: 0.03 - 0.1mm by 0.01mm, 0.2 - 0.5mm by 0.1mm, 0.15mm
	184-302S		150mm	13 leaves: 0.03 - 0.1mm by 0.01mm, 0.2 - 0.5mm by 0.1mm, 0.15mm

Precision Levels

SERIES 960

FEATURES

- High-precision longitudinal and transverse vials make it possible to check or level surfaces.
- Supplied in wooden box.

SPECIFICATIONS

Metric

Order No.	Sensitivity	Accuracy	Dimensions (W x D x H)
960-703	0.02mm/m	±0.006mm	200 x 44 x 200mm

Inch

Order No.	Sensitivity	Accuracy	Dimensions		
			W	D	H
960-611	.0012″/12″	±.0006″	7.87″	1.73″	1.50″
960-612	.0006″/12″	±.0003″	7.87″	1.73″	1.50″
960-613	.00024″/12″	±.00017″	7.87″	1.73″	1.50″

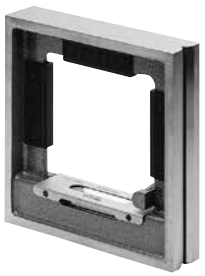

960-703



960-611

Wooden Box Part No.

Part No.	Spare
073112	**960-703**
063413	**960-611**
	960-611
	960-613

Mitutoyo

Digital Universal Protractor

SERIES 187

FEATURES

- Data output function make it easy to see the statistical data.
- Can be attached to height gages. gage holder (950750, metric)
- Setting preset value.
- Removable blade.



187-552

Technical Data

Range:	-360° to +360°
Tolerance:	±2′ (±0.03°)
Repeatability:	1′
Resolution:	1′ (0.01°)
Battery:	Lithium Battery
Battery life:	2,000 hours

Function

Presetting

Standard Accessories

12" Blade (Code No. 187-103)
Battery (CR2032) (Part No. 05SAA217)
Clamp box for Inch Height Gage (Part No. 950749)
Plastic Case

Optional Accessories

187-104	6" blade
187-105	Acute angle attachment
950750	Clamp box for Metric Height Gage
905338	Connecting cable (40" / 1m)
905409	Connecting cable (80" / 2m)

SPECIFICATIONS

Code No.	187-552
Model	BP-D300E
Blade	12" (187-103)
Display	LCD - 5 digit, (-) sign, character height 6.5mm
Measuring range	-360˚ ~ +360˚
Resolution	1′ (0.01˚)
Accuracy	± 2′ (±0.03˚)
Repeatability	1′ (0.01˚)
Mass	1.45 lbs (659g)
Dust / Water protection level	IP40
Function	Zero, Direction select, Data output / Data hold, Preset, Switchable Seagesimal or Decimal Natation
Max. response speed	3 rps
Battery	Lithium battery (CR2032) 1 pc. (Part No. 05SAA217)
Battery life	2,000 hours
Alarm	Battery voltage low, Over speed error (Err)
Temperature	Operation temperature: 0 to 40˚C Storage temperature: -10 to 60˚C

DIMENSIONS

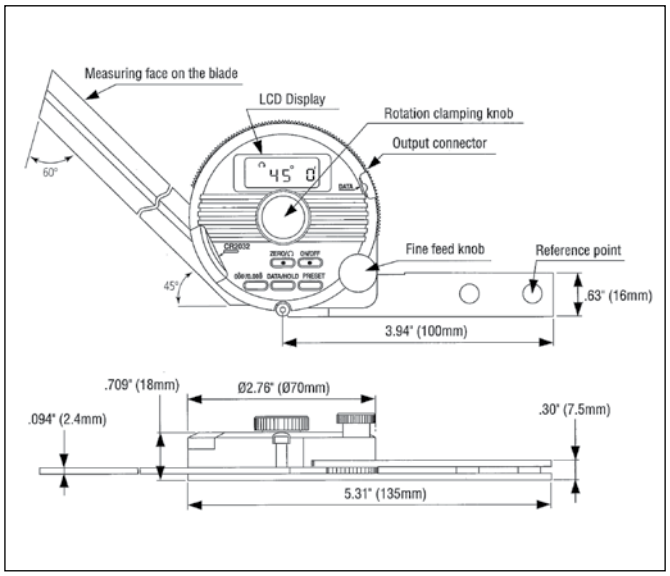

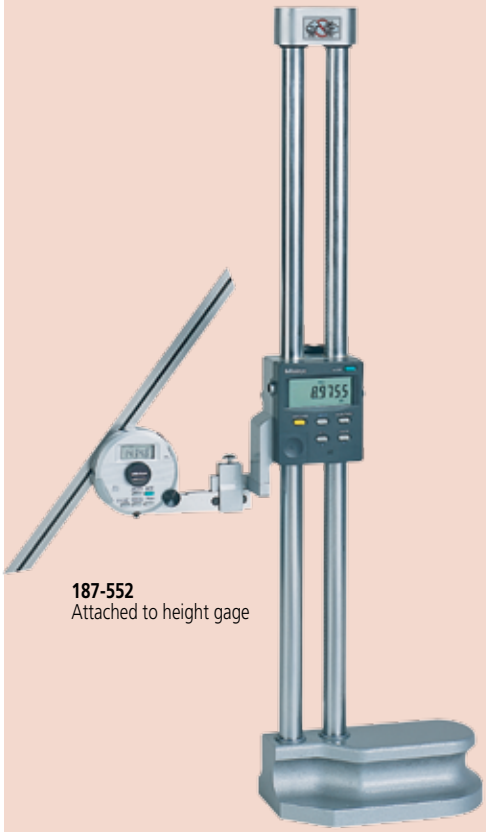

187-552
Attached to height gage

Universal Bevel Protractor

SERIES 187

Technical Data

Graduation:	5min. (0˚ - 90˚ - 0˚)
Accuracy	
Vernier	±5′
Straightness	[.00016"+(.00005xL/2)]"
Parallelism	[.00016"+(.00005xL/2)]"
L = Length in inch	
Diameter:	2.56" / 70mm





FEATURES

- High-precision angle gage for accurate angle measurement of machines, molds, and jigs.
- Can be attached to height gages.

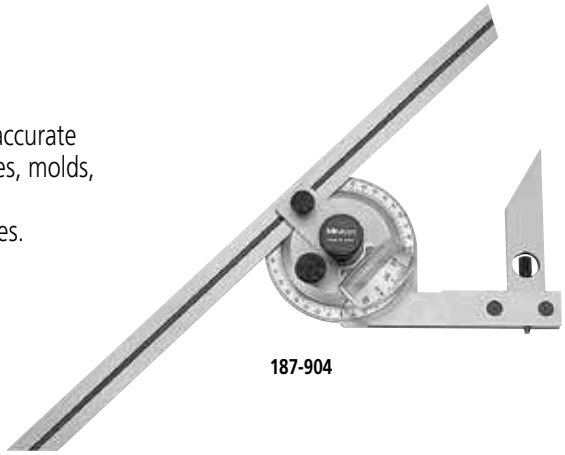

187-904

SPECIFICATIONS

Universal Bevel Protractors

	Graduation		
Order No.	Dial	Vernier	Remarks
187-904	1°	5 min	with 6″ blade (**187-104**) and Clamp box for Inch Height Gages (**950749**)
187-906	1°	5min	with 12″ blade (**187-103**) and Clamp box for Inch Height Gages (**950749**)

Universal Bevel Protractor Accessories and Parts

Order No.	Remarks
187-103	12″ Blade
187-104	6″ Blade
187-105	Acute angle attachment
950749	Clamp box for Inch Height Gages
950750	Clamp box for Metric Height Gages

DIMENSIONS

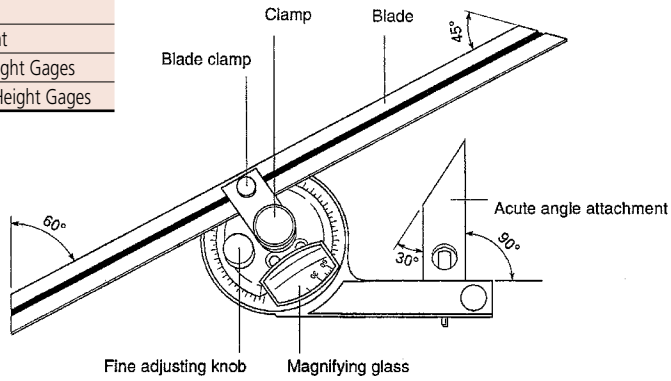

Bevel Protractor

SERIES 187

Technical Data

Graduation:	5 min. (0° - 90° - 0°)
Blade edge angle:	30° and 60°
Diameter:	2.56″ / 70mm

FEATURES

- Consists of three sheets of stainless steel, the middle one of which is made for angle measurements.

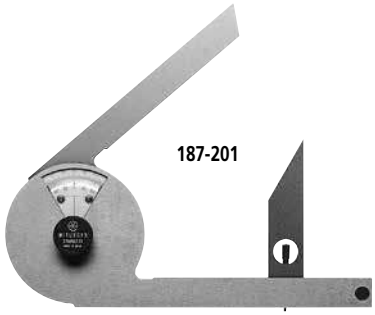

187-201

SPECIFICATIONS

Order No.	Graduation	Remarks
187-201	1˚ / 5 min	Center black knob locks the blade position Protractor Graduation: 0°–90°, 90°–0°

Mitutoyo

Radius Gages

SERIES 186

FEATURES

- Radius size is stamped on each gage.
- Both concave and convex radius gages become a pair.
- With a locking clamp.

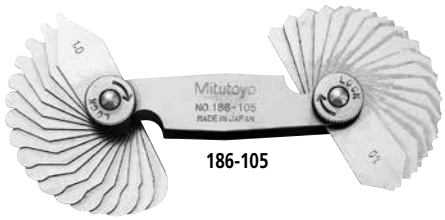

186-105

SPECIFICATIONS

Metric

Range	Order No.	Composition of leaves	Remarks
0.4 - 6mm	**186-110**	18 leaves: 0.4, 0.8, 1, 1.2, 1.5, 1.6mm, 1.75 - 3mm by 0.25mm, 3.5 - 6mm by 0.5mm	90° arc
1 - 7mm	**186-105**	34 pairs: 1 - 3mm by 0.25mm 3.5 - 7mm by 0.5mm	180° arc
7.5 - 15mm	**186-106**	32 pairs: 7.5 - 15mm by 0.5mm	180° arc
15.5 - 25mm	**186-107**	15 pairs: 15.5 - 20mm by 0.5mm, 21 - 25mm by 1mm	180° arc

Inch

Range	Order No.	Composition of leaves	Remarks
1/32" - 17/64"	**186-103**	16 leaves: 1/32" - 17/64" by 64ths	90° arc
1/32" - 1/4"	**186-101**	15 pairs: 1/32" - 1/4" by 64ths	180° arc
17/64" - 1/2"	**186-102**	16 pairs: 17/64" - 1/2" by 64ths	180° arc
9/32" - 33/64"	**186-104**	16 leaves: 9/32" - 33/64" by 64ths	90° arc

Technical Data

Accuracy: ±.002″

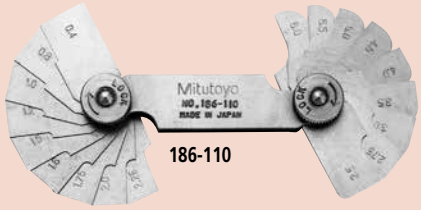

186-110

Pitch Gages

SERIES 188, 950

FEATURES

- Thread pitch size is stamped on each gage.
- Metric, Unified, and Whitworth screw pitch gages.

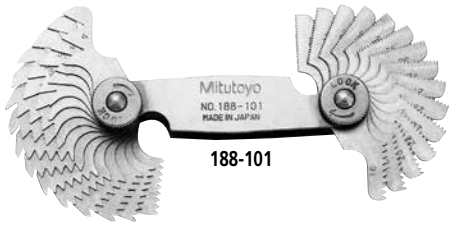

188-101

SPECIFICATIONS

Metric Screw Pitch Gages (60°)

Range	Order No.	Composition of leaves
0.25 - 2.5mm	**188-153**	28 leaves: 0.25, 0.30. 0.35, 0.40, 0.45, 0.50, 0.55, 0.60, 0.65, 0.70, 0.75, 0.80, 0.85, 0.90, 1.00, 1.10, 1.20, 1.25, 1.30, 1.40, 1.50, 1.60, 1.70, 1.75, 1.80, 1.90, 2.00. 2.50 mm
0.35 - 6mm	**188-130**	22 leaves: 0.35, 0.4, 0.45, 0.5, 0.6, 0.7, 0.75, 0.8, 1, 1.25, 1.5, 1.75, 2, 2.5, 3, 3.5, 4, 4.5, 5, 5.5, 6mm and 60° angle gage
0.4 - 7mm	**188-122**	21 leaves: 0.4, 0.5, 0.7, 0.75, 0.8, 0.9, 1, 1.25, 1.5, 1.75, 2, 2.5, 3, 3.5, 4, 4.5, 5, 5.5, 6, 6.5, 7mm
0.4 - 7mm	**188-121**	18 leaves: 0.4, 0.5, 0.75, 1, 1.25, 1.5, 1.75, 2, 2.5, 3, 3.5, 4, 4.5, 5, 5.5, 6, 6.5, 7mm

Unified Screw Pitch Gages (60°)

Range	Order No.	Composition of leaves
4 - 42 TPI	**188-111**	30 leaves: 4, 4 1/2, 5, 5 1/2, 6, 7, 8, 9, 10, 11, 11 1/2, 12, 13, 14, 15, 16, 18, 20, 22, 24, 26, 27, 28, 30, 32, 34, 36, 38, 40, 42 TPI
4 - 84 TPI	**950-253**	51 leaves: 4, 41/2, 5, 51/2, 6, 7, 8, 9, 10, 11, 111/2, 12, 13, 14, 15, 16, 18, 20, 22, 24, 26, 27, 28, 30, 32, 34, 36, 38, 40, 42, 44, 46, 48, 50, 52, 54, 56, 58, 60, 62, 64, 66, 68, 70, 72, 74, 76, 78, 80, 82, 84 TPI

Note: Metric and Unified Pitch Gage Set (**188-151**) is available. It consists of **188-122** (Metric) and **188-111** (Unified).

Metric and Unified Screw Pitch Gage Set (60°)

Range	Order No.	Composition of leaves
0.4 - 7mm / 4 - 42 TPI	**188-151**	51 leaves: Set of 188-122 and 188-111
0.5 - 6mm / 4 - 56 TPI	**188-152**	28 leaves: 4, 6, 8, 10, 11, 11-1/2, 12, 13, 16, 20, 28, 32, 40, 56 TPI 0.50, 0.75, 1.00, 1.25, 1.50, 1.75, 2.00, 2.50, 3.00, 3.50, 4.00, 4.50, 5.00. 6.00 mm

Whitworth Screw Pitch Gages (55°)

Range	Order No.	Composition of leaves
4 - 42 TPI	**188-101**	30 leaves: 4, 4 1/2, 5, 5 1/2, 6, 7, 8, 9, 10, 11, 11 1/2, 12, 13, 14, 15, 16, 18, 20, 22, 24, 26, 27, 28, 30, 32, 34, 36, 38, 40, 42 TPI
4 - 60 TPI	**188-102**	28 leaves: 4, 4 1/2, 5, 6, 7, 8, 9, 10, 11, 12, 13, 14, 16, 18, 19, 20, 22, 24, 25, 26, 28, 30, 32, 34, 36, 40, 48, 60 TPI

Technical Data

TPI	Metric	Accuracy	
		Pitch (mm)	Angular (minutes)
4-6	6.35-4.23	±0.05	±35
7-12	3.63-2.12	±0.05	±40
13-25	1.95-1.02	±0.05	±45
26-48	0.98-0.53	±0.05	±50
60	0.42	±0.05	±60

Radius Gages-Sets

SERIES 186

FEATURES

Radius Gages are recommended for checking or laying out concave or convex radii. An individual gage for each dimension makes it possible to verify radius or fillet dimensions easier, faster and more accurately in machining, layout, inspection and pattern-making work. The measuring surfaces are precisely finished with smooth, accurate edges. Radius gages are available separately or in six sets. Each radius gage has five measuring locations, and it is identified with its particular radius dimensions. The gages have a satin or dull-chrome finish.

The holding cases, provided to protect the sets of radius gages, have indexed pockets to facilitate the selection of the proper size gage. A 4" long holder is furnished with Set No. 186-901 to make it possible to check radii in confined or hard-to-reach locations.



186-901

Accuracy: ±.0016" / 0.04mm

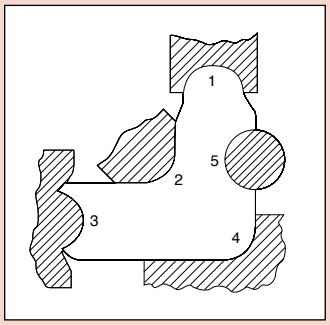

5 concave and convex radii per leaf.

SPECIFICATIONS

Metric

Order No.	No. of Leaves	Sizes	Remarks
186-902	26	0.5 - 13mm by 0.5mm	90° arc

Inch

Order No.	No. of Leaves	Sizes	Remarks
186-901	25	1/64"–17/64" by 64ths and 9/32"–1/2" by 32nds	Holder
186-903	17	1/64"–17/64" by 64ths	
186-904	8	9/32"–1/2" by 32nds	
186-905	8	9/16"–1" by 16ths	Holder
186-906	26	.010–.030" by .005" .040–.100" by .010" .120–.300" by .020" .350–.500" by .050"	Holder
186-907	10	.550–1" by .050"	

Decimal

Radius	Part No.	Radius	Part No.
.010"	**211798**	.240"	**211816**
.015"	**211799**	.260"	**211817**
.020"	**211800**	.280"	**211818**
.025"	**211801**	.300"	**211819**
.030"	**211802**	.350"	**211820**
.040"	**211803**	.400"	**211821**
.050"	**211804**	.450"	**211822**
.060"	**211805**	.500"	**211823**
.070"	**211806**	.550"	**211824**
.080"	**211807**	.600"	**211825**
.090"	**211808**	.650"	**211826**
.100"	**211809**	.700"	**211827**
.120"	**211810**	.750"	**211828**
.140"	**211811**	.800"	**211829**
.160"	**211812**	.850"	**211830**
.180"	**211813**	.900"	**211831**
.200"	**211814**	.950"	**211832**
.220"	**211815**	1.000"	**211833**

Fraction

Radius	Part No.	Radius	Part No.
1/64"	**201441**	5/16"	**201459**
1/32"	**201442**	11/32"	**201460**
3/64"	**201443**	3/8"	**201461**
1/16"	**201444**	13/32"	**201462**
5/64"	**201445**	7/16"	**201463**
3/32"	**201446**	15/32"	**201464**
7/64"	**201447**	1/2"	**201465**
1/8"	**201448**	9/16"	**211790**
9/64"	**201449**	5/8"	**211791**
5/32"	**201450**	11/16"	**211792**
11/64"	**201451**	3/4"	**211793**
3/16"	**201452**	13/16"	**211794**
13/64"	**201453**	7/8"	**211795**
7/32"	**201454**	15/16"	**211796**
15/64"	**201455**	1"	**211797**
1/4"	**201456**		
17/64"	**201457**		
9/32"	**201458**		

Mitutoyo

Digital Protractor

SERIES 950

FEATURES

These digital protractors present inclination values on an easy-to-read LCD. The measurements are generated by an electronic gravity sensor and processed by the latest low-power electronic circuit technology.

- Full 360° range (90° x 4).
- Machined aluminum frame.
- Alternate reference (zero).
- Reading hold.
- Simple calibration requiring no special fixtures.
- Display remains upright to view at all angles. (950-317, Pro 360 Model).
- RS232C output. (950-318 Pro 3600 Model).
- Supplied in fitted carrying case.



Front View



950-317 Back View



950-318 Back View

SPECIFICATIONS

Order No.	950-317	950-318
Model	Pro 360	Pro 3600
Range	360° (90°x4)	360° (90°x4)
Resolution	0.1°	0.01° (0° to 9.99°) 0.1° (10° to 90°)
Accuracy	±0.1°Level ±10°, Plumb ±10° ±0.2° Maximum error	±0.05° (0° to 10°) ±0.1° (80° to 90°) ±0.2° (10° to 80°)
Repeatability	±0.1°	±0.05°
Cross Axis Error	Minimal	Minimal
Battery Life	500 Hrs. Standard 9-Volt Battery	500 Hrs. Standard 9-Volt Battery
Temperature Operation Storage	-5°C to 50°C (23° to 122°F) -20°C to 65°C (-4°F to 149°F)	-5°C to 50°C (23° to 122°F) -20°C to 65°C (-4°F to 149°F)
Weight	289g (10.2oz.)	295g (10.4oz.)
Output	N/A	RS-232C Compatible
Standard Accessories	Plastic Case	Plastic Case

±Represents clockwise or counter-clockwise slope.

DIMENSIONS

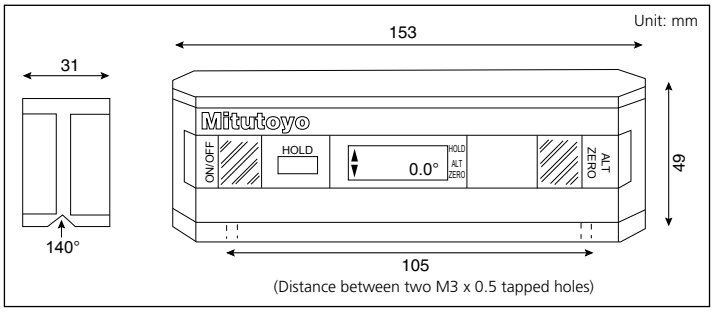

Optional Accessories

50AAA983A RS-232C Output cable w/foot switch

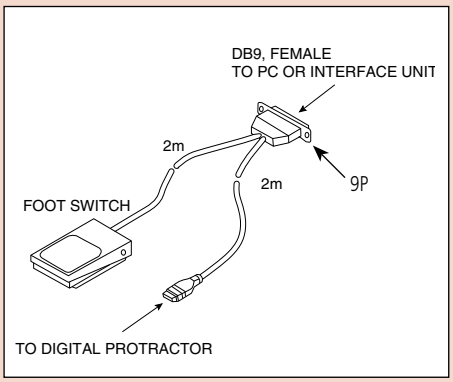

50AAA983A RS-232C Output cable w/foot switch 10P-9P

Digital Hand Tachometers

SERIES 982

FEATURES

- New digital hand tachometers are compact and easy to handle.
- NIST certification is supplied with each digital hand tachometer.
- Model PH-200LC (982-552) has laser diode detection and a combination of contact and non-contact measurement.
- Supplied with plastic carrying case.





982-551



982-552

DIMENSIONS

982-551

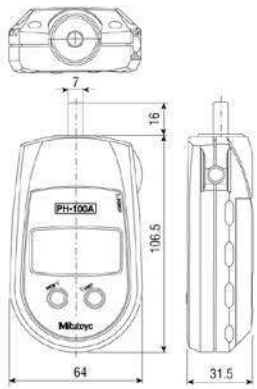

982-552

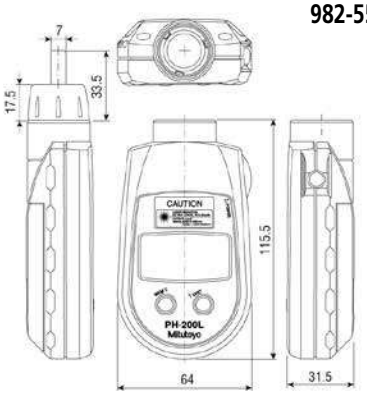

SPECIFICATIONS

Order No.	982-551	982-552
Model No.	PH-100A	PH-200LC
Revolution per minute	1.0 – 25,000 rpm	—
Rotation speed	—	Non-contact: 6.0 – 99,999 rpm; Contact: 6.0 – 25,000 rpm
Measuring accuracy Revolution Surface, Speed, Length	1.0 – 599.9rpm: ±1rpm, 600.0 – 25,000 rpm: ±0.006% and ±0.5 digit ±0.4% and 1 digit	6.0 – 599.9 rpm: ±1rpm, 600.0 – 99,999 rpm ±0.006% and ±0.5 digit ±0.4% and ±1 digit
Detection	Optical coupler, 20 pulses per revolution	Laser diode
Outside dimensions	4.83″ L x 2.52″ W x 1.24″ H (122.5mm x 64mm x 31.5mm)	4.55″ L x 2.52″ W x 1.24″ H Overall length with contact adapter: 149mm
Mass	170 g	160 g
Power	Battery: AA 3 pcs.	Battery: AA 3 pcs.

Optional Accessories for Digital Hand Tachometers

Order No.	Description	Dimension	Drawing
010049	Cone Adapter, Standard	D = 1/2″	
010051	Cone Adapter, 3/4″	D = 3/4″	
010052	Cone Adapter, 1-1/4″	D = 1-1/4″ d = 1/2″	
010053	Funnel Adapter, Standard	D = 1/2″	
010054	Funnel Adapter, 3/4″	D = 3/4″	
010055	Measuring Wheel FPM (6″ cir), Standard	D = 1.91″	
010056	Measuring Wheel FPM (12″ cir)	D = 3.82″	
010057	Measuring Wheel YPM (0.1 yard cir)	D = 1.15″	
010058	Measuring Wheel MPM (0.1 meter cir)	D = 1.25″	
010059	Reflective Tabs 1/2″ square (35 pcs)		
010060	Extension Shaft (3″ length)		

Mitutoyo

Bench Center

SERIES 967

FEATURES

- Used with a dial test indicator (optional), the bench center provides precision measurement of concentricity verification on cylindrical workpieces.
- With an indicator clamp. (Holding stem diameter: 9.53mm / .375")

967-201-10



DIMENSIONS

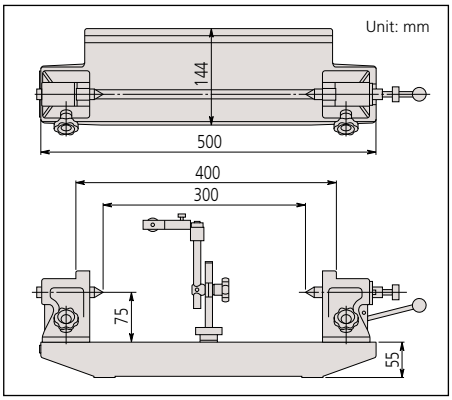

Order No.	A	B	C	D	E	F	G	H
967-203-10	310	40	50	70	178	41	60	134.5
967-201-10	500	45	75	80	370	36	60	194.5
967-204-10	700	80	100	140	500	65	110	194.5
967-202-10	900	100	125	160	600	50	104	230

SPECIFICATIONS

Order No.	Center-to-Center	Workpiece Capacity Diameter	Max. Weight Hold	Parallelism of Centers	Flatness of Surface	Attachment Diameter	Mass (kg)
967-203-10	5.9" / 150mm	3.8"	17.5 lbs. (8kg)	.0002"	.0004"	Ø3/8"	7
967-201-10	11.8" / 300mm	5.8"	35 lbs. (16kg)	.0002"	.0006"	Ø3/8"	13
967-204-10	17.7" / 450mm	7.8"	44 lbs. (20kg)	.0002"	.0007"	Ø3/8"	60
967-202-10	23.6" / 600mm	9.8"	66 lbs. (30kg)	.00024"	.0008"	Ø3/8"	70

Technical Data

Maximum workpiece dia.: 300mm
Maximum workpiece height: 150mm
Mass: 13kg
Spindle Tip Material: Hardened Steel

Standard Accessories:

56AAK066 Indicator rod assembly
967-201-10
967-203-10

56AAK961R Indicator rod assembly
967-202-10
967-204-10

Optional Accessories:

56AAJ988 Special attachment for mounting **967-201-10** in vertical position.

56AAJ987 Special attachment for mounting **967-203-10** in vertical position.

Granite Surface Plate Accessories

SERIES 517

These accessories are made from the same high-quality black granite as Mitutoyo surface plates, allowing flexibility in work holding and positioning.

SPECIFICATIONS

Angle Blocks with or without inserts

Grade	Laboratory*			Master**		
		4 Face			4 Face	
Size	2 Face	no inserts	w/ inserts	2 Face	no inserts	w/ inserts
4 x 4 x 4"	**517-767**	**517-761**	**517-773**	**517-867**	**517-861**	**517-873**
6 x 6 x 6"	**517-768**	**517-762**	**517-774**	**517-868**	**517862**	**517-874**

*Laboratory overall accuracy: .000025" per 6".
**Master overall accuracy: .000050" per 6".

Angle Blocks



517-862
(without inserts)

Parallels

Grade	Laboratory			Master		
Size	Pair Accuracy	2 Face	4 Face	Accuracy	2 Face	4 Face
.75 x 1 x 6"	.00003"	**517-755**	**517-750**	.00006"	**517-855**	**517-850**
.75 x 1.5 x 9"	.00004"	**517-756**	**517-751**	.00008"	**517-856**	**517-851**
1 x 2 x 12"	.00006"	**517-757**	**517-752**	.0001"	**517-857**	**517-852**

V-Blocks Matching Pair

V-1 type have matching accuracy on "V" from the bottom face only.
V-5 type have four face matching accuracy plus "V".

Grade	Laboratory*		Master**	
Size	V-1	V-5	V-1	V-5
2 x 2 x 2.5"	**517-787**	**517-783**	**517-887**	**517-883**
3 x 3 x 3"	**517-788**	**517-784**	**517-888**	**517-884**
6 x 6 x 6"	**517-789**	**517-785**	**517-889**	**517-885**

*Laboratory overall accuracy: .00005" per 6".
**Master overall accuracy: .0001" per 6

517-884 V-Blocks (matching pair)



517-852
Parallels
(in pairs)

Black Granite Surface Plate

SERIES 517

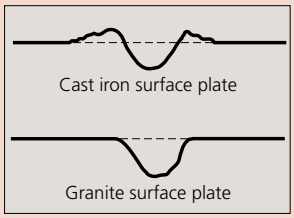

FEATURES

- Natural granite seasoned for thousands of years is free from deterioration or dimensional change over time.
- Granite surface plate has many advantages over cast iron surface plates:
  Twice as hard as cast iron.
  Minimal changes in dimension due to temperature changes.
  Free from wringing, so there is no interruption of work.
  Free from burrs or protrusions because of the fine grain structure and insignificant stickiness; this ensures a high degree of flatness over a long service life and causes no damage to other parts or instruments.
- Trouble-free operation for use with magnetic materials.
- Long life and rust-free, resulting in low maintenance costs.
- Mitutoyo granite surface plates meet or exceed federal specification GGG-P-463c. Each surface plate is shipped with a Certificate of Accuracy which guarantees its accuracy and verifies its traceability to NIST.
- All plates from 48"x108" and larger are machine base gray granite. Smaller plates are black granite.
- Surface plates, to size of specifications other than standard, available by special order.
- Surface plates, with the bolt screws, available by special order.
- All Mitutoyo surface plates shipped F.O.B. Escondido, CA.

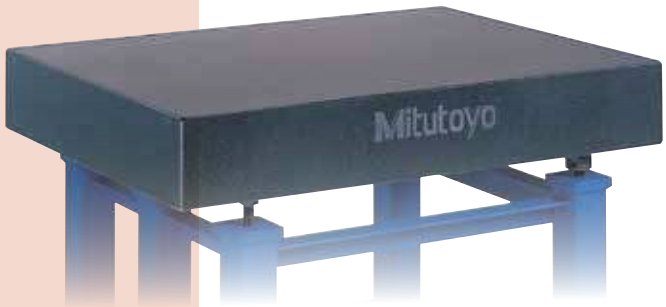

SPECIFICATIONS

Inch 100 lbs.-Load / sq. ft. no ledge

Size	AA Laboratory Grade				A Inspection Grade				B Shop Grade			
	H	Acc.*	**Order No.**	Wt. (lbs)	H	Acc.*	**Order No.**	Wt. (lbs)	H	Acc.*	**Order No.**	Wt. (lbs)
8 x 12"	3"	50	**517-700**	30	2"	100	**517-800**	25	2"	200	**517-900**	25
9 x 12"	3"	50	**517-701**	40	3"	100	**517-801**	40	2"	200	**517-901**	30
12 x 12"	3"	50	**517-702**	50	3"	100	**517-802**	50	3"	200	**517-902**	50
12 x 18"	4"	50	**517-703**	100	4"	100	**517-803**	100	4"	200	**517-903**	100
18 x 18"	4"	50	**517-704**	150	4"	100	**517-804**	150	3"	200	**517-904**	100
18 x 24"	4"	65	**5 17-705**	200	4"	130	**517-805**	200	4"	260	**517-905**	200
24 x 24"	5"	70	**517-706**	310	4"	140	**517-806**	259	3"	280	**517-906**	200
24 x 30"	5"	75	**517-707**	400	5"	150	**517-807**	400	4"	300	**517-907**	300
24 x 36"	6"	85	**517-708**	600	5"	170	**517-808**	500	4"	340	**517-908**	400
24 x 48"	8"	150	**517-709**	1000	6"	300	**517-809**	800	5"	600	**517-909**	650
30 x 36"	6"	100	**517-710**	800	5"	200	**517-810**	600	5"	400	**517-910**	600
30 x 48"	8"	150	**517-711**	1300	6"	300	**517-811**	1000	6"	600	**517-911**	1000
30 x 60"	12"	200	**517-712**	1900	10"	500	**517-812**	1535	8"	1000	**517-912**	1150
36 x 36"	6"	100	**517-713**	900	5"	200	**517-813**	780	5"	400	**517-913**	700
36 x 48"	8"	150	**517-714**	1500	6"	300	**517-814**	1200	6"	600	**517-914**	1200
36 x 60"	12"	200	**517-715**	2850	10"	400	**517-815**	2350	8"	800	**517-915**	1900
36 x 72"	12"	250	**517-716**	3400	10"	500	**517-816**	2850	8"	1000	**517-916**	2300
48 x 48"	8"	200	**517-717**	2025	6"	400	**517-817**	1525	6"	800	**517-917**	1500
48 x 60"	12"	250	**517-718**	3800	10"	500	**517-818**	3150	8"	1000	**517-918**	2525
48 x 72"	12"	300	**517-719**	4500	10"	600	**517-819**	3800	8"	1200	**517-919**	3050
48 x 84"	14"	350	**517-720**	6150	12"	700	**517-820**	5325	10"	1400	**517-920**	4450
48 x 96"	14"	400	**517-721**	7000	12"	800	**517-821**	6050	10"	1600	**517-921**	5150
48 x 108"	14"	500	**517-722**	7900	12"	1000	**517-822**	6830	10"	2000	**517-922**	5700
48 x 120"	18"	700	**517-723**	11300	16"	1400	**517-823**	10160	14"	2800	**517-923**	8800
48 x 144"	18"	800	**517-724**	13500	16"	1600	**517-824**	12200	14"	3200	**517-924**	10500
60 x 60"	14"	250	**517-725**	5500	12"	500	**517-825**	4800	10"	1000	**517-925**	4000
60 x 72"	14"	350	**517-726**	6600	12"	700	**517-826**	5750	10"	1400	**517-926**	4900
60 x 96"	14"	500	**517-727**	8800	12"	1000	**517-827**	7600	10"	2000	**517-927**	6500
60 x 120"	16"	700	**517-728**	11050	14"	1400	**517-828**	11100	12"	2800	**517-928**	9800
60 x 144"	18"	900	**517-729**	16950	16"	1800	**517-829**	15100	14"	3600	**517-929**	14200
72 x 72"	14"	400	**517-730**	8000	12"	800	**517-830**	7000	10"	1600	**517-930**	5700
72 x 96"	16"	500	**517-731**	12025	14"	1000	**517-831**	10800	12"	2000	**517-931**	9200
72 x 120"	16"	700	**517-732**	15070	14"	1400	**517-832**	13400	12"	2800	**517-932**	11400
72 x 144"	18"	1000	**517-733**	20300	16"	2000	**517-833**	18100	14"	4000	**517-933**	15900

* Accuracies shown in microinches (µin)

Inch 50 lbs.-Load / sq. ft. no ledge

Size	AA Laboratory Grade				A Inspection Grade				B Shop Grade			
	H	Acc.	**Order No.**	Wt.	H	Acc.	**Order No.**	Wt.	H	Acc.	**Order No.**	Wt.
8 x 12″	2″	50	**517-740**	25	2″	100	**517-840**	25	2″	200	**517-940**	25
12 x 18″	3″	50	**517-741**	80	3″	100	**517-841**	80	2″	200	**517-941**	60
18 x 24″	4″	65	**517-742**	200	3″	130	**517-842**	165	2″	260	**517-942**	100
24 x 36″	5″	85	**517-743**	500	4″	170	**517-843**	400	3″	340	**517-943**	300
36 x 48″	6″	150	**517-746**	1200	5″	300	**517-846**	1000	4″	600	**517-946**	800

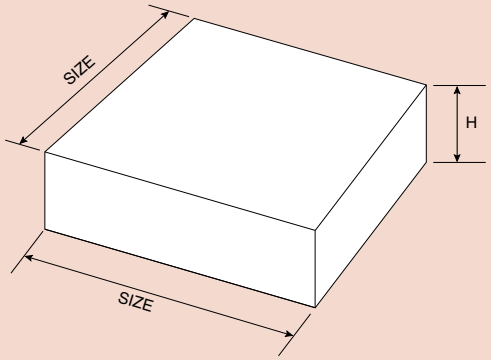

Steel Stands

Steel stands for supporting black granite surface plates, at working levels, are available either stationary or with casters. Sizes and weights are given below.



Note: The total height of stand and granite plate is 36″. If ordering only stand, stand height will be made according to a Grade A granite plate thickness.

SPECIFICATIONS

Size	Stationary		With Casters	
	Order No.	Wt.	**Order No.**	Wt.
12 x 18″	**517-950**	42lbs	**517-950-1**	46lbs
18 x 18″	**517-951**	46lbs	**517-951-1**	50lbs
18 x 24″	**517-952**	50lbs	**517-952-1**	56lbs
24 x 24″	**517-954**	65lbs	**517-954-1**	69lbs
24 x 30″	**517-955**	70lbs	**517-955-1**	74lbs
24 x 36″	**517-956**	73lbs	**517-956-1**	77lbs
24 x 48″	**517-957**	90lbs	**517-957-1**	94lbs
30 x 36″	**517-960**	85lbs	**517-960-1**	89lbs
30 x 48″	**517-961**	95lbs	**517-961-1**	99lbs
30 x 60″	**517-962**	105lbs	**517-962-1**	109lbs
36 x 36″	**517-963**	95lbs	**517-963-1**	99lbs
36 x 48″	**517-964**	105lbs	**517-964-1**	109lbs
36 x 60″	**517-965**	160lbs	**517-965-1**	164lbs
36 x 72″	**517-966**	180lbs	**517-966-1**	184lbs
48 x 48″	**517-967**	190lbs	**517-967-1**	194lbs
48 x 60″	**517-968**	200lbs	**517-968-1**	204lbs
48 x 72″	**517-969**	205lbs	**517-969-1**	209lbs
48 x 84″	**517-970**	320lbs	**517-970-1**	324lbs
48 x 96″	**517-971**	335lbs	**517-971-1**	339lbs
48 x 108″	**517-972**	350lbs	**517-972-1**	354lbs
48 x 120″	**517-973**	365lbs	**517-973-1**	369lbs
48 x 144″	**517-974**	430lbs	**517-974-1**	434lbs
60 x 60″	**517-975**	245lbs		
60 x 72″	**517-976**	340lbs		
60 x 96″	**517-977**	375lbs		
60 x 120″	**517-978**	455lbs		
60 x 144″	**517-979**	480lbs		
72 x 72″	**517-980**	380lbs		
72 x 96″	**517-981**	465lbs		
72 x 120″	**517-982**	510lbs		
72 x 144″	**517-983**	530lbs		

48x72 and smaller include keepers to prevent the surface plate from being pushed off the stand.





Digimatic Indicators



Dial Indicators



Dial Test Indicators



Dial Indicator Applications and Stands



INDEX

Digimatic Indicators	
ABSOLUTE Solar Digimatic Indicator ID-S	F-2
ABSOLUTE Digimatic Indicator ID-S	F-3
ABSOLUTE Digimatic Indicator ID-U	F-4
ABSOLUTE Digimatic Indicator ID-C	F-5,6
ABSOLUTE Digimatic Indicator ID-C Calculation-Type	F-7
ABSOLUTE Digimatic Indicator ID-C Max./Min. Value Holding Function	F-8
ABSOLUTE Digimatic Indicator ID-C Bore Gage Application	F-9
ABSOLUTE Digimatic Indicator ID-C Go/No-go Signal Output Function	F-10
ABSOLUTE Digimatic Indicator ID-H	F-11
ABSOLUTE Digimatic Indicator ID-F	F-12
ABSOLUTE Digimatic Indicator ID-N / B	F-13
EC Counter	F-14
Dial Indicators	F-15-30
Back Plunger Dial Indicators	F-31,32
Backs-Optional Accessory for Digimatic and Dial Indicators	F-33
Contact Points	F-34,35
Spindle Lifting Lever and Cable	F-36
Color Spindle Caps	F-37
Limit Stickers	F-37
Dial Indicator Repair Tool Kit	F-38
Dial Indicator Crystal Setter	F-38
Dial Test Indicators	F-39-43
Pocket Dial Test Indicators	F-44-45
Dial Test Indicators	F-46
Contact Points and Clamp Holders	F-47
Dial Indicator Applications	
i-Checker	F-48
UDT-2 Dial Gage Testers	F-49
Calibration Testers	F-49
Thickness Gages	F-50-52
Quick-Mini	F-53
Digimatic Caliper Gages	F-54,55
Dial Caliper Gages	F-56-58
Dial Tension Gages	F-59
V-Block Sets	F-59
Magnetic V-Block	F-59
Dial Snap Gages	F-60
Stands	
Dial/Test Indicator & Magnetic Stand Sets	F-61
Magnetic Stands	F-61
Dial Gage Stands	F-62
Transfer Stands	F-63
Granite Comparator Stands	F-64
Comparator Stands	F-65
Precision Granite Stands	F-66

ABSOLUTE Solar Digimatic Indicator ID-S

543 Series – With Simple Design

FEATURES

- Mitutoyo's unique ABSOLUTE sensor automatically restores the last origin position when the indicator is turned on. This allows quick-start operation, which is particularly useful in multipoint measurement.
- Measurement tool with a solar power source. Ready for use from 40 lux illumination.
- Similar in size to Series 2 dial indicators.
- SPC output provided.
- Two large buttons (three on inch/mm models) improve functionality.



543-502B
ID-S112ESB



543-500
ID-S112S

SPECIFICATIONS

Inch/Metric with 3/8" dia. Stem, #4-48UNF Thread

Order	Model	Range	Resolution	Accuracy	Stem Diameter	Measuring Force	Back Type
543-502	ID-S112ES	.5"/12.7mm	.00005"/0.001mm	.0001"/0.003mm	3/8" (ANSI/AGD)	1.5N or less	Lug Back
543-502B	ID-S112ESB	.5"/12.7mm	.00005"/0.001mm	.0001"/0.003mm	3/8" (ANSI/AGD)	1.5N or less	Flat Back
543-507	ID-S1012ES	.5"/12.7mm	.0005"/0.01mm	.001"/0.02mm	3/8" (ANSI/AGD)	1.5N or less	Lug Back
543-507B	ID-S1012ESB	.5"/12.7mm	.0005"/0.01mm	.001"/0.02mm	3/8" (ANSI/AGD)	1.5N or less	Flat Back

Metric with 8mm dia. Stem, M2.5x.45 Thread

Order	Model	Range	Resolution	Accuracy	Stem Diameter	Measuring Force	Back Type
543-500	ID-S112S	12.7mm	0.001mm	0.003mm	8mm (ISO)	1.5N or less	Lug Back
543-500B	ID-S112SB	12.7mm	0.001mm	0.003mm	8mm (ISO)	1.5N or less	Flat Back
543-505	ID-S1012S	12.7mm	0.01mm	0.02mm	8mm (ISO)	1.5N or less	Lug Back
543-505B	ID-S1012SB	12.7mm	0.01mm	0.02mm	8mm (ISO)	1.5N or less	Flat Back

Inch/Metric with 8mm dia. Stem, M2.5x.45 Thread

Order	Model	Range	Resolution	Accuracy	Stem Diameter	Measuring Force	Back Type
543-501	ID-S112MS	.5"/12.7mm	.00005"/0.001mm	.0001"/0.003mm	8mm (ISO)	1.5N or less	Lug Back
543-501B	ID-S112MSB	.5"/12.7mm	.00005"/0.001mm	.0001"/0.003mm	8mm (ISO)	1.5N or less	Flat Back
543-506	ID-S1012MS	.5"/12.7mm	.0005"/0.01mm	.001"/0.02mm	8mm (ISO)	1.5N or less	Lug Back
543-506B	ID-S1012MSB	.5"/12.7mm	.0005"/0.01mm	.001"/0.02mm	8mm (ISO)	1.5N or less	Flat Back

Technical Data

Accuracy: Refer to the list of specifications
Resolution: 0.01mm, 0.001mm, .00005"/0.001mm, or .0005"/0.01mm
Display: LCD
Length Standard: ABSOLUTE electrostatic capacitance-type linear encoder
Max. Response Speed: Unlimited
Measuring Force: Refer to the list of specifications
Battery: Solar Battery*
Dust/Water Protection Level: IP42
*Can be used continuously above 40 lux

Function

Origin Set, Counting Direction Switching, in/mm conversion

Optional Accessories

21EZA198 Lifting lever (mm)
21EZA199 Lifting lever (inch)
540774 Lifting cable
21EZA105 Lifting knob (mm)
21EZA150 Lifting knob (inch)
905338 SPC cable (1m)
905409 SPC cable (2m)
———: Backs (See page F-33.)
———: Contact points (See page F-34.)

About the charge function:

Reserve capacity allows a fully charged ID-S Solar to be used for about 3.5 hours under light conditions below the minimum level. The charging time differs depending on the environment, but it usually takes about 1.5 hours for a fully discharged ID-S Solar to fully recharge under light conditions of 500 lux.

DIMENSIONS

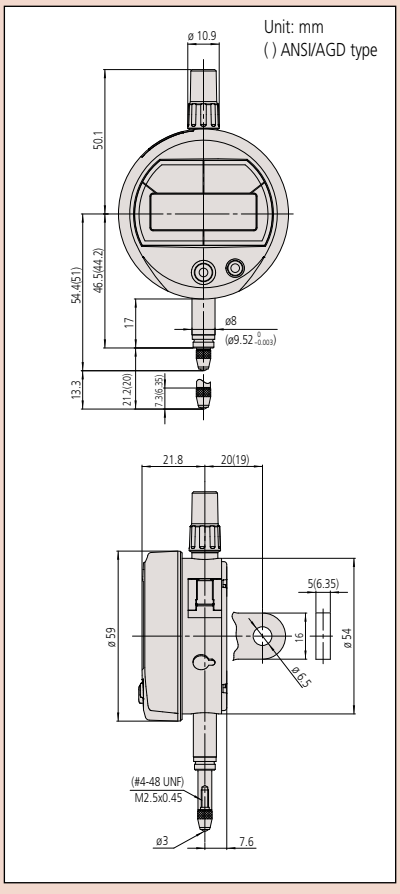

ABSOLUTE Digimatic Indicator ID-S

SERIES 543 — with Simple Design

SPC

ABSOLUTE®
Absolute System Patented by MITUTOYO

PROPRIETARY INSPECTION CERTIFICATE
Mitutoyo guarantees the product quality.

FEATURES

- After the initial zero-setting with the Origin button, the repeated absolute positioning is no longer necessary over entire battery life.
- Unlimited response speed eliminates over-speed errors
- Similar in size to standard Series 2 dial indicators.
- SPC data output.



543-782B



543-792B

Technical Data

Accuracy: Refer to the list of specifications
Resolution: 0.01mm, 0.001mm, .0005"/0.01mm, .0001"/0.001mm or .00005"/0.001mm
Display: LCD
Length standard: ABSOLUTE electrostatic capacitance-type linear encoder
Max. response speed: Unlimited
Measuring force: Refer to the list of specifications
Battery: SR44 (1 pc.), **938882**
Battery life: Approx. 20,000 hours under normal use
Dust/Water protection level: IP42 (IP53: **543-794B**, **543-795B**, **543-796B**)
Inspection certificate is included.

Function

Origin-set, Zeroset, Counting direction switching, Power ON/OFF, Data output, inch/mm conversion (on inch/metric models only)
Alarm: Low voltage, Counting value composition error, Over-flow error

Optional Accessories

905338: SPC cable (40" / 1m)
905409: SPC cable (80" / 2m)
21EZA198: Spindle lifting lever (ISO/JIS type)
21EZA199: Spindle lifting lever (ANSI/AGD type)
540774: Spindle lifting cable (stroke: .4" / 10mm)
21EZA105 Lifting knob (mm)
21EZA150 Lifting knob (inch)
125317: Spare rubber boot (for dust-proof type)
———: Backs (See page F-33.)
———: Contact points (See page F-34.)

SPECIFICATIONS

Inch/Metric Stem dia. 3/8", #4-48 UNF Thread — ISO/JIS type — ANSI/AGD type

Resolution	Range	Order No. w/ lug back	Order No. w/ flat-back	Model	Accuracy	Measuring force	Remarks
.00005"/0.001mm	.5" / 12.7mm	**543-792**	**543-792B**	ID-S112EX	±.0001"	1.5N or less	—
.00005"/0.001mm	.5" / 12.7mm	**543-796**	**543-796B**	ID-S112PEX	±.0001"	2.5N	Dust-proof
.0001"/0.001mm	.5" / 12.7mm	**543-793**	**543-793B**	ID-S112TX	±.0001"	1.5N or less	—
.0005"/0.01mm	.5" / 12.7mm	**543-783**	**543-783B**	ID-S1012EX	±.0010"	1.5N or less	—

Inch/Metric Stem ø 8mm, M2.5 x 0.45 Thread

Resolution	Range	Order No. w/ lug back	Order No. w/ flat-back	Model	Accuracy	Measuring force	Remarks
.00005"/0.001mm	.5" / 12.7mm	**543-791**	**543-791B**	ID-S112MX	±.0001"	1.5N or less	—
.00005"/0.001mm	.5" / 12.7mm	**543-795**	**543-795B**	ID-S112PMX	±.0001"	2.5N or less	Dust-proof
.0005"/0.01mm	.5" / 12.7mm	**543-782**	**543-782B**	ID-S1012MX	±.0008"	1.5N or less	—

Metric Stem ø 8mm, M2.5 x 0.45 Thread

Resolution	Range	Order No. w/ lug back	Order No. w/ flat-back	Model	Accuracy	Measuring force	Remarks
0.001mm	12.7mm	**543-790**	**543-790B**	ID-S112X	0.003mm	1.5N or less	—
0.001mm	12.7mm	**543-794**	**543-794B**	ID-S112PX	0.003mm	2.5N or less	Dust-proof
0.01mm	12.7mm	**543-781**	**543-781B**	ID-S1012X	0.02mm	1.5N or less	—

DIMENSIONS

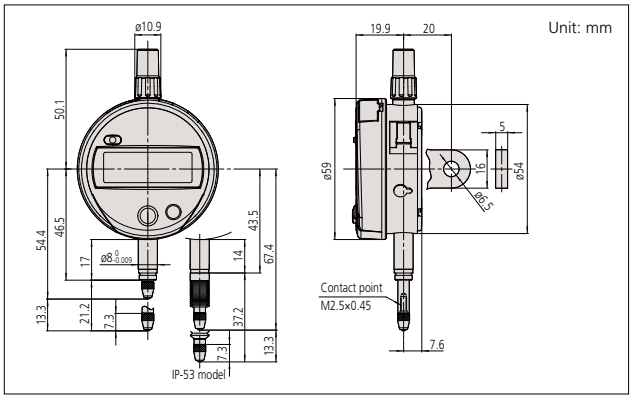

Note 1: Dimensions of the inch (ANSI/AGD Type) dial indicator partly differ from those of the metric (ISO/JIS Type) indicator.
Note 2: Inch (ANSI/AGD Type) dial indicators are provided with a stem of 3/8" dia. and #4-48UNF thread mount for the contact point.

Mitutoyo

ABSOLUTE Digimatic Indicator ID-U

SERIES 575 — With Slim and Simple Design

FEATURES

- Slim digital indicator with low price.
- Large LCD and simple key operation.
- After the initial origin setting, the ID-U no longer needs absolute positioning over entire battery life; the origin is remembered even after power-off.
- Ideal for installation into measuring devices because of compact design and long battery life.
- Employing the ABSOLUTE linear encoder, the ID-U always displays the spindle "Absolute Position" from the origin at power-on. Also unlimited response speed eliminates over-speed errors.
- Flat back type only has no option for backs.
- SPC data output.



575-121

IP42



575-123

SPC

ABSOLUTE®
Absolute System Patented by MITUTOYO

Technical Data

Accuracy: Refer to the list of specifications
Resolution: 0.01mm or .0005"/0.01mm,
Display: LCD
Length standard: ABSOLUTE electrostatic capacitance type linear encoder
Max. response speed: Unlimited
Measuring force: Refer to the list of specifications
Battery: SR44 (1 pc.), **938882**
Battery life: Approx. 20,000 hours under normal use
Dust/Water protection level: IP42

Function

Origin-set, Zeroset, Counting direction switching, Power ON/OFF, Data output,
inch/mm conversion (on inch/metric models only)
Alarm: Low voltage, Counting value composition error, Over-flow error

Optional Accessories

905338: SPC cable (40" / 1m)
905409: SPC cable (80" / 2m)
540774: Spindle lifting cable (stroke: .4" / 10mm)
———: Contact points (See page F-34.)

SPECIFICATIONS

Inch/Metric Stem dia. 3/8", #4-48 UNF Thread — ISO/JIS type — ANSI/AGD type

Resolution	Range	Order No.	Model	Accuracy	Measuring force
.0005"/0.01mm	1" / 25.4mm	**575-123**	ID-U1025E	.0008"	1.8N or less

Inch/Metric Stem ø 8mm, M2.5 x 0.45 Thread

Resolution	Range	Order No.	Model	Accuracy	Measuring force
.0005"/0.01mm	1" / 25.4mm	**575-122**	ID-U1025M	.0008"	1.8N or less

Metric Stem ø 8mm, M2.5 x 0.45 Thread

Resolution	Range	Order No.	Model	Accuracy	Measuring force
0.01mm	25.4mm	**575-121**	ID-U1025	0.02mm	1.8N or less

DIMENSIONS

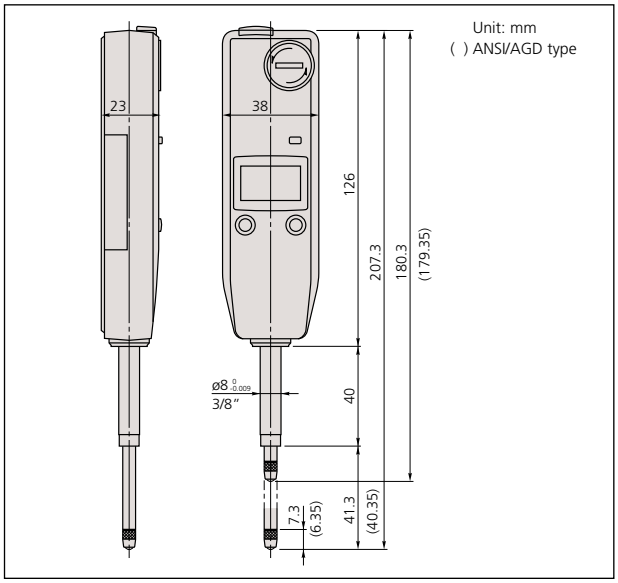

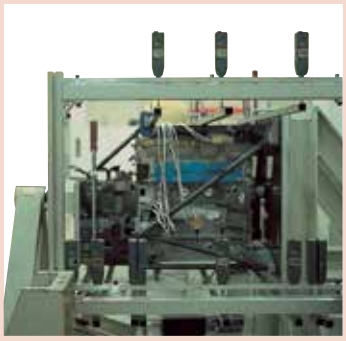

Application example

ABSOLUTE Digimatic Indicator ID-C

SERIES 543 — Standard Type

SPC

ABSOLUTE®
Absolute System Patented by MITUTOYO

Mitutoyo guarantees the product quality. PROPRIETARY INSPECTION CERTIFICATE Mitutoyo guarantees the product quality.

Technical Data

Accuracy: Refer to the list of specifications

Resolution:		
	0.01mm type	0.01mm
	0.001mm type*	0.001mm/0.01mm
	.0005"/0.01mm type	.0005"/0.01mm
	.00005"/0.001mm type*	.0005"/.0001"/.00005"/0.01mm/0.001mm

* Switchable resolution

Display: LCD
Length standard: ABSOLUTE electrostatic capacitance type linear encoder
Max. response speed: Unlimited
Measuring force: Refer to the list of specifications
Battery: SR44 (1 pc.), **938882**
Battery life: Approx. 7,000 hours under normal use
Dust/Water protection level: IP42
Inspection certificate is included

Function

Origin-set/Preset, Zeroset, go/no-go judgment, Counting direction switching, Power ON/OFF, Data output, inch/mm conversion (on inch/metric models only)
Alarm: Low voltage, Counting value composition error, Over-flow error, Tolerance limit setting error
Internal calculations using the simple formula of [F(x) = Ax] are available.

Optional Accessories

905338: SPC cable (40" / 1m)
905409: SPC cable (80" / 2m)
21EZA198: Spindle lifting lever (ISO/JIS type)*
21EZA199: Spindle lifting lever (ANSI/AGD type)*
21EZA105: Spindle lifting knob (12.7mm/.5"ISO/JIS type)**
21EZA150: Spindle lifting knob(12.7mm/.5"ANSI/AGD type)**
21EZA197: Spindle lifting knob (25.4mm/1", 50.8mm/2" models)
21EZA200: Spindle lifting knob (50.8mm/2")
540774: Spindle lifting cable (stroke: (1"/ 25.4mm)
02ACA571: Auxiliary spindle spring for 25mm/1" models***
02ACA773: Auxiliary spindle spring for 50mm/2" models***
———: Backs (See page F-33.)
———: Contact points (See page F-34.)

*Can be used on 12mm/.5" models only.
**Not available for low measuring force models.
***Required when orienting gage upside down.

FEATURES

- Similar in size to Series 2 dial indicators.
- Large, easy-to-read LCD.
- Go/no-go judgment can be performed by setting upper and lower tolerance limits. The judgment result (go/no-go) can be displayed in full-size characters.
- The positive/negative count resulting from the spindle's up/down movement can be toggled.
- Internal calculations using the simple formula of [F(x) = Ax)] are available.
- Employing the ABSOLUTE linear encoder, the ID-C always displays the spindle "Absolute Position" from the origin at power-on. Also unlimited response speed eliminates over-speed errors.
- The ID-C indicator face can be rotated 330° to an appropriate angle for easy reading.
- With SPC data output.



543-392
IP42



543-402
IP42



543-472B
IP42



543-492B
IP42

Mitutoyo

SPECIFICATIONS

Inch/Metric Stem dia. 3/8", #4-48 UNF Thread — ISO/JIS type — ANSI/AGD type

Resolution	Range	Order No. (w/lug, flat-back)		Model	Accuracy	Measuring force	Remarks
.00005"/0.001mm*	.5" / 12.7mm	**543-392**	**543-392B**	ID-C112EXB	.0001"	1.5N or less	—
.00005"/0.001mm*	.5" / 12.7mm	**543-396**	**543-396B**	ID-C112CEX	.0001"	0.4N - 0.7N	Low measuring force
.00005"/0.001mm*	1" / 25.4mm	—	**543-472B**	ID-C125EXB	.0001"	1.8N or less	—
.00005"/0.001mm*	2" / 50.8mm	—	**543-492B**	ID-C150EXB	.0002"	2.3N or less	—
.0005"/0.01mm	.5" / 12.7mm	**543-402**	**543-402B**	ID-C1012EX	.001"	0.9N or less	—
.0005"/0.01mm	.5" / 12.7mm	**543-406**	**543-406B**	ID-C1012CEX	.001"	0.2N - 0.5N	Low measuring force
.0005"/0.01mm	1" / 25.4mm	—	**543-476B**	ID-C1025EXB	.001"	1.8N or less	—
.0005"/0.01mm	2" / 50.8mm	—	**543-496B**	ID-C112CEXB	.0016"	2.3N or less	—

* Switchable Resolution Type

Inch/Metric Stem ø 8mm, M2.5 x 0.45 Thread

Resolution	Range	Order No. (w/lug, flat-back)		Model	Accuracy	Measuring force	Remarks
.00005"/0.001mm*	.5" / 12.7mm	**543-391**	**543-391B**	ID-C112MX	.0001"	1.5N or less	—
.00005"/0.001mm*	.5" / 12.7mm	**543-395**	**543-395B**	ID-C112CMX	.0001"	0.4N - 0.7N	Low measuring force
.00005"/0.001mm*	1" / 25.4mm	—	**543-471B**	ID-C125MXB	.0001"	1.8N or less	—
.00005"/0.001mm*	2" / 50.8mm	—	**543-491B**	ID-C150MXB	.0002"	2.3N or less	—
.0005"/0.01mm	.5" / 12.7mm	**543-401**	**543-401B**	ID-C1012MX	.001"	0.9N or less	—
.0005"/0.01mm	.5" / 12.7mm	**543-405**	**543-405B**	ID-C1012CMX	.001"	0.2N - 0.5N	Low measuring force
.0005"/0.01mm	1" / 25.4mm	—	**543-475B**	ID-C1025MXB	.001"	1.8N or less	—
.0005"/0.01mm	2" / 50.8mm	—	**543-495B**	ID-C1050MXB	.0016"	2.3N or less	—

* Switchable Resolution Type

Metric Stem ø 8mm, M2.5 x 0.45 Thread

Resolution	Range	Order No. (w/lug, flat-back)		Model	Accuracy	Measuring force	Remarks
0.001mm*	12.7mm	**543-390**	**543-390B**	ID-C112X	0.003mm	1.5N or less	—
0.001mm*	12.7mm	**543-394**	**543-394B**	ID-C112CX	0.003mm	0.4N - 0.7N	Low measuring force
0.001mm*	25.4mm	—	**543-470B**	ID-C125XB	0.003mm	1.8N or less	—
0.001mm*	50.8mm	—	**543-490B**	ID-C150XB	0.006mm	2.3N or less	—
0.01mm	12.7mm	**543-400**	**543-400B**	ID-C1012X	0.02mm	0.9N or less	—
0.01mm	12.7mm	**543-404**	**543-404B**	ID-C1012CX	0.02mm	0.2N - 0.5N	Low measuring force
0.01mm	25.4mm	—	**543-474B**	ID-C1025XB	0.03mm	1.8N or less	—
0.01mm	50.8mm	—	**543-494B**	ID-C1050XB	0.04mm	2.3N or less	—

* Switchable Resolution Type

DIMENSIONS

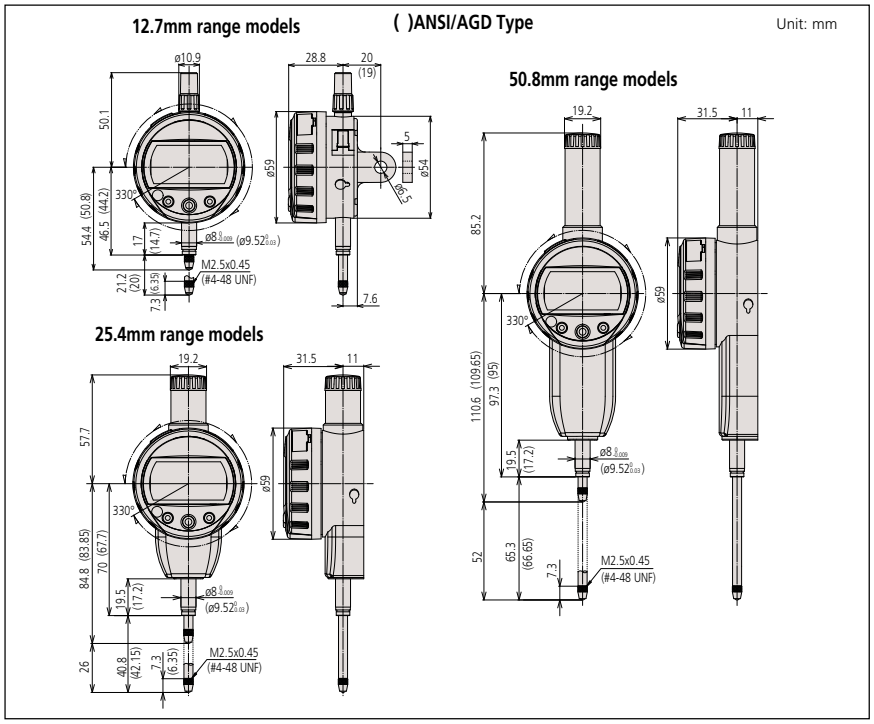

330° Rotary display

The display can be rotated 330°, allowing use at a position where you can easily read the measurement value.

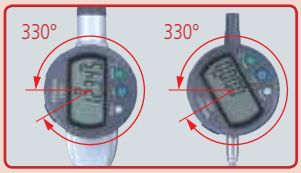

Calculation: f(x) = Ax

Mounting the **ID-C** on a measuring jig and setting the multiplying factor A (to any value) allows direct measurement without using a conversion table and improves measurement efficiency.





Application example

Function locking

Ensures reliability of measurement by locking the settings to prevent preset function settings from being changed by mistake.



Setting measuring force on low measuring force models.

•543-404/404B/405/405B/406/406B

Spindle orientation	Spring	Weight (approximately 0.1N)	Maximum measuring force
Pointing vertically downward	Yes	Yes	0.5N
	Yes	No	0.4N
	No	Yes	0.3N
	No	No	0.2N
Horizontal	Yes	No	0.2N

Note: Operation using configurations other than shown above is not guaranteed.

•543-394/394B/395/395B/396/396B

Spindle orientation	Spring	Weight (approximately 0.1N)	Maximum measuring force
Pointing vertically downward	Yes	Yes	0.7N
	Yes	No	0.6N
	No	Yes	0.4N
	No	No	Not guaranteed
Horizontal	Not guaranteed		

Note: Operation using configurations other than shown above is not guaranteed.

ABSOLUTE Digimatic Indicator ID-C

SERIES 543 — Calculation Type

SPC

ABSOLUTE®
Absolute System Patented by MITUTOYO

Mitutoyo guarantees the product quality. PROPRIETARY INSPECTION CERTIFICATE Mitutoyo Guarantees the product quality.

Technical Data

Accuracy: Refer to the list of specifications
Resolution: 12 Steps
.00005/.0001/.0005"
0.001/0.01mm
Display: LCD
Length standard: ABSOLUTE electrostatic capacitance-type linear encoder
Max. response speed: Unlimited
Measuring force: Refer to the list of specifications
Battery: CR2032 (1 pc.), **05SAA217**
Battery life: Approx. 12 months under normal use
IP Rating: Equivalent to IP-42*1

*1 A protection class indication (IP=International Protection) is based on the IEC 60529 /DIN40050 part 1/JIS D0207, C0920. The level indicated is valid only if the output connector cap is installed.

Function

Key Lock, Parameter Lock, PC-USB Input, Analog Bar, FAST measurement frequency, Preset (up to 3 values), Tolerance Judgment , Peak Detection , Calculation, inch/mm conversion (on inch/metric models only), Counting direction switching, Data Output
Alarm: Low voltage, Counting value composition error, Over-flow error, Tolerance limit setting error

Optional Accessories

905338: Connecting Cable (1m)
905409: Connecting Cable (2m)
21EZA313: Parameter Setting USB Cable
21EZA198: Spindle lifting lever (12.7mm ISO/JIS type)
21EZA199: Spindle lifting lever (12.7mm ASME/AGD type)
21EZA105: Lifting Knob (12.7mm/.5" ISO/JIS Models)
21EZA150: Lifting Knob (12.7mm/.5" ASME/AGD Models)
21EZA197: Lifting Knob (for 25.4/1"mm models)
21EZA200: Lifting Knob (for 50.8/2"mm models)
540774: Spindle lifting cable
———: Backs (See page F-33.)
———: Contact points (See page F-34.)

APPLICATIONS



- Various fixtures suited for individual workpieces can be prepared.
- Measuring accuracy is subject to fixture accuracy

FEATURES

- The new Calculation-Type Digimatic Indicator features both a Key-Lock and Parameter-Lock to prevent accidental changing of settings during operation.
- Improved parameter setting software makes easy to set all available parameters, and determine and upload the proper coefficients for calculation. (optional)
- Fast measurement frequency allows the user to increase the number of readings per second from 10 to 50, allowing higher accuracy measurements of TIR and MAX/MIN.
- An analog bar provides easy-to-read values when scanning for Max, Min, and TIR Values.
- The Absolute Digimatic indicator performs internal calculations using the formula Ax+B+Cx-1 (assuming spindle displacement as x) while the specified coefficients A, B and C can be set with respect to the purpose of measurement or dimensions of the fixtures. This unique features allows you to read your measurements directly, without the need for conversions.



543-342B

SPECIFICATIONS

ISO/JIS type ANSI/AGD type

Inch/Metric Stem dia. 3/8" #4-48 UNF Thread

Resolution	Range	Order No.*	Model	Accuracy	Measuring Force
.00005/.0001/.0005" 0.001/0.01mm Selectable	.5"/12.7mm	**543-342B**	ID-C112REXB	±.00010"/0.003mm	1.5N or less
	1"/25.4mm	**543-592B**	ID-C125REXB	±.00010"/0.003mm	1.8N or less
	2"/50.8mm	**543-597B**	ID-C150REXB	±.00025"/0.006mm	2.3N or less

Inch/Metric Stem ø 8mm, M2.5 x 0.45 Thread

Resolution	Range	Order No.*	Model	Accuracy	Measuring Force
.00005/.0001/.0005" 0.001/0.01mm Selectable	.5"/12.7mm	**543-341B**	ID-C112RMXB	±.00010"/0.003mm	1.5N or less
	1"/25.4mm	**543-591B**	ID-C125RMXB	±.00010"/0.003mm	1.8N or less
	2"/50.8mm	**543-596B**	ID-C150RMXB	±.00025"/0.006mm	2.3N or less

Metric Stem ø 8mm, M2.5 x 0.45 Thread

Resolution	Range	Order No.*	Model	Accuracy	Measuring Force
0.001/0.01mm Selectable	.5"/12.7mm	**543-340B**	ID-C112RXB	0.003mm	1.5N or less
	1"/25.4mm	**543-590B**	ID-C125RXB	0.003mm	1.8N or less
	2"/50.8mm	**543-595B**	ID-C150RXB	0.006mm	2.3N or less

*Flat back

DIMENSIONS

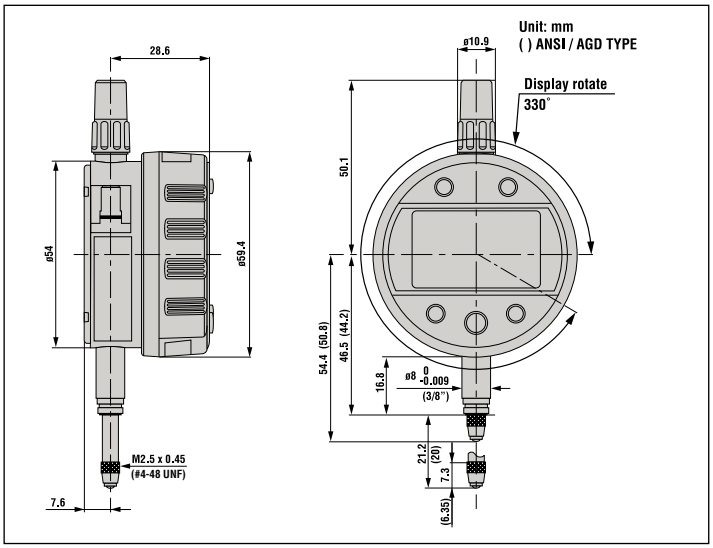

Mitutoyo

ABSOLUTE Digimatic Indicator ID-C

SERIES 543 — With Max./Min. Value Holding Function

FEATURES

- The new Peak Hold-Type Digimatic Indicator features both a Key-Lock and Parameter-Lock to prevent accidental changing of settings during operation.
- Parameter setting software makes it even eay to set all available parameters.
- An analog bar provides easy-to-read values when scanning for Max, Min and TIR Values.
- The maximum, minimum or runout value can be displayed during measurement.
- Go/no-go judgment is performed by setting the upper and lower tolerances for max., min. and runout values.
- High speed sampling ratio of 50 times/s.
- Employing the ABSOLUTE linear encoder, the Signal ID-C always displays the spindle Absolute Position from the origin when turned on.



543-302B

SPECIFICATIONS

ISO/JIS type ANSI/AGD type

Inch/Metric Stem dia. 3/8" #4-48 UNF Thread

Resolution	Range	Order No.		Model	Accuracy
		w/lug	Flat-back		
.00005/.0001/.0005" 0.001/0.01mm Selectable	.5"/12.7mm	**543-302**	**543-302B**	ID-C112AEX(B)	±.00010"/0.003mm

Inch/Metric Stem ø 8mm, M2.5 x 0.45 Thread

Resolution	Range	Order No.		Model	Accuracy
		w/lug	Flat-back		
.00005/.0001/.0005" 0.001/0.01mm Selectable	.5"/12.7mm	**543-301**	**543-301B**	ID-C112AMX(B)	±.00010"/0.003mm

Metric Stem ø 8mm, M2.5 x 0.45 Thread

Resolution	Range	Order No.		Model	Accuracy
		w/lug	Flat-back		
0.001-0.01mm Selectable	12.7mm	**543-300**	**543-300B**	ID-C112AX(B)	0.003mm

DIMENSIONS

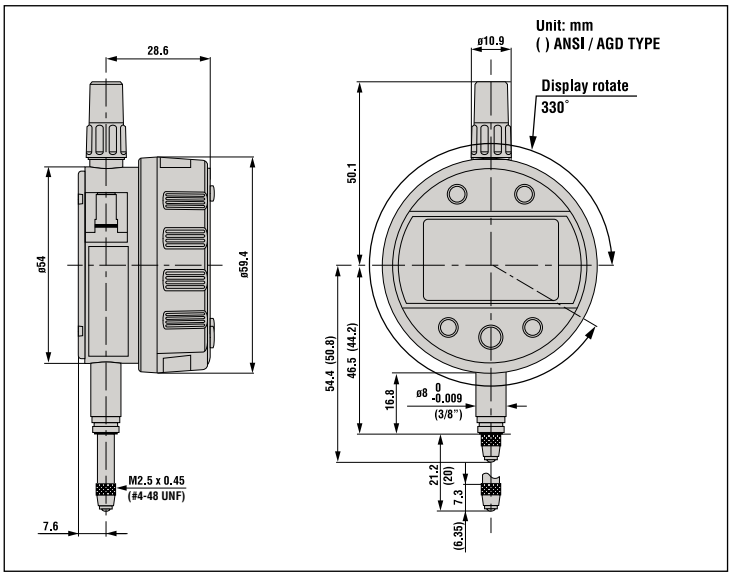

SPC

ABSOLUTE® Absolute System Patented by MITUTOYO

Mitutoyo guarantees the product quality. PROPRIETARY INSPECTION CERTIFICATE Mitutoyo guarantees the product quality.

Technical Data

Accuracy: Refer to the list of specifications
Resolution: 0.001-0.01mm or .00005-.0005"/ 0.001-0.01mm
Display: LCD
Length standard: ABSOLUTE electrostatic capacitance-type linear encoder
Max. response speed: Unlimited
Measuring force: 1.5N or less
Battery: CR2032 (1 pc.), **05SAA217**
Battery life: Approx. 12 months under normal use
IP Rating: Equivalent to IP-42*1

*1 A protection class indication (IP=International Protection) is based on the IEC 60529 /DIN40050 part 1/JIS D0207, C0920. The level indicated is valid only if the output connector cap is installed.

Function

Key Lock, Parameter Lock, PC-USB Input, Analog Bar, Fast measurement frequency, Preset (up to 3 values), Tolerance Judgment , Peak Detection , Calculation (Ax), inch/mm conversion (on inch/metric models only) Counting direction switching, Data Output
Alarm: Low voltage, Counting value composition error, Overflow error, Tolerance limit setting error

Optional Accessories

905338: Connecting Cable (1m)
905409: Connecting Cable (2m)
21EZA313: Parameter Setting USB Cable
21EZA198: Spindle lifting lever (12.7mm ISO/JIS type)
21EZA199: Spindle lifting lever (12.7mm ASME/AGD type)
21EZA105: Lifting Knob (12.7mm/.5" ISO/JIS models)
21EZA150: Lifting Knob (12.7mm/.5" ASME/AGD models)
21EZA197: Lifting Knob (for 25.4/1"mm models)
21EZA200: Lifting Knob (for 50.8/2"mm models)
540774: Spindle lifting cable
———: Backs (See page F-33.)
———: Contact points (See page F-34.)

ABSOLUTE Digimatic Indicator ID-C

SERIES 543 — Specially Designed for Bore Gage Application

SPC

ABSOLUTE®
Absolute System Patented by MITUTOYO

PROPRIETARY INSPECTION CERTIFICATE
Mitutoyo guarantees the product quality

Technical Data

Accuracy: Refer to the list of specifications
Resolution: 0.001-0.01mm or
.00005-.0005"/0.001-0.01mm
Display: LCD
Length standard: ABSOLUTE electrostatic capacitance type linear encoder
Max. response speed: Unlimited
Measuring force: 1.5N or less
Battery: CR2032 (1 pc.), **05SAA217**
Battery life: Approx. 12 months under normal use
IP Rating: Equivalent to IP-42*1

*1 A protection class indication (IP=International Protection) is based on the IEC 60529 /DIN40050 part 1/JIS D0207, C0920. The level indicated is valid only if the output connector cap is installed.

Function

Key Lock, Parameter Lock, PC-USB Input, Analog Bar, Fast measurement frequency, Preset (up to 3 values), Tolerance Judgment , Peak Detection (Min Only), inch/mm conversion (on inch/metric models only), Data Output
Alarm: Low voltage, Counting value composition error, Overflow error, Tolerance limit setting error

Optional Accessories

905338: Connecting Cable (1m)
905409: Connecting Cable (2m)
21EZA313: Parameter Setting USB Cable
Applicable Gages Series 511 and 526



Installed on optional bore gage probe (**511-703**)

FEATURES

- The new Bore Gage-Type Digimatic Indicator features both a Key-Lock and Parameter-Lock to prevent accidental changing of settings during operation.
- Parameter setting software makes it easy to set all available parameters. (optional)
- Fast measurement frequency allows the user to increase the number of readings per second from 10 to 50.
- The minimum value holding function provides the easy detection of hole diameter.
- An analog bar indicator is integrated to enhance the intuition in reading.
- Go/no-go judgment is performed by setting the upper and lower tolerances.
- Up to three sets of master values and upper/lower tolerance values can be memorized.
- Employing the ABSOLUTE linear encoder, the ID-C always displays the spindle Absolute Position from the origin when turned on.



543-310B

SPECIFICATIONS

ISO/JIS type ANSI/AGD type

Inch/Metric Stem dia. 3/8" #4-48 UNF Thread

Resolution	Range	Order No.	Model	Accuracy	Measuring Force
.00005/.0001/.0005" 0.001/0.01mm Selectable	.5"/12.7mm	**543-312B**	ID-C112GEXB	±.00010"/0.003mm	1.5N or less

Inch/Metric Stem ø 8mm, M2.5 x 0.45 Thread

Resolution	Range	Order No.	Model	Accuracy	Measuring Force
.00005/.0001/.0005" 0.001/0.01mm Selectable	.5"/12.7mm	**543-311B**	ID-C112GMXB	±.00010"/0.003mm	1.5N or less

Metric Stem ø 8mm, M2.5 x 0.45 Thread

Resolution	Range	Order No.	Model	Accuracy	Measuring Force
0.001/0.01mm Selectable	12.7mm	**543-310B**	ID-C112GXB	0.003mm	1.5N or less

DIMENSIONS

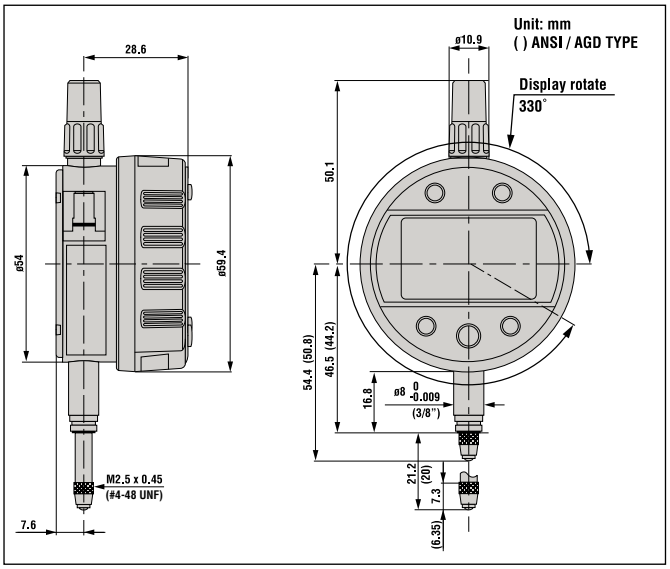

Mitutoyo

ABSOLUTE Digimatic Indicator ID-C

SERIES 543 — With Green/Red LED and Go/No-go Signal Output Function

FEATURES

- With the max./min. value holding function, the signal ID-C can output the go/no-go judgment result against the peak values set. Substitute for the mechanical/electrical contact, the judgment is carried out by calculating the measurement data obtained. This provides high reliability with no deterioration of the contact point and volume adjustment.
- The signal can be output to an external device such as a sequencer through the NPN open-collector.
- The go/no-go judgment result is also indicated by the green/red LED and the "<, O, >" signs on LCD.
- Employing the ABSOLUTE linear encoder, the Signal ID-C always displays the spindle Absolute Position from the origin when powered up.
- The Signal ID-C achieves the IP54 protection level to resist dust and contaminants for safe operation in harsh machine shop environments.
- The high-speed detector measures 100 times per second.
- Analog Bar



SPECIFICATIONS

Inch/Metric Stem dia. 3/8" #4-48 UNF Thread ISO/JIS type ANSI/AGD type

Resolution	Range	Order No. (w/ lug, flat-back)		Model	Accuracy	Measuring force
.00005/.0001/.0005" 0.001/0.01mm	.5" / 12.7mm	**543-352**	**543-352B**	ID-C112JEX(B)	±.00010/0.003mm	2.5N or less

Inch/Metric Stem ø 8mm, M2.5 x 0.45 Thread

Resolution	Range	Order No. (w/ lug, flat-back)		Model	Accuracy	Measuring force
.00005/.0001/.0005" 0.001/0.01mm	.5" / 12.7mm	**543-351**	**543-351B**	ID-C112JMX(B)	±.00010/0.003mm	2.5N or less

Metric Stem ø 8mm, M2. x 0.45 Thread

Resolution	Range	Order No. (w/ lug, flat-back)		Model	Accuracy	Measuring force
0.001/0.01mm	12.7mm	**543-350**	**543-350B**	ID-C112JX(B)	0.003mm	2.5N or less

DIMENSIONS

Unit: mm

ISO/JIS Type
() ANSI/ADG Type

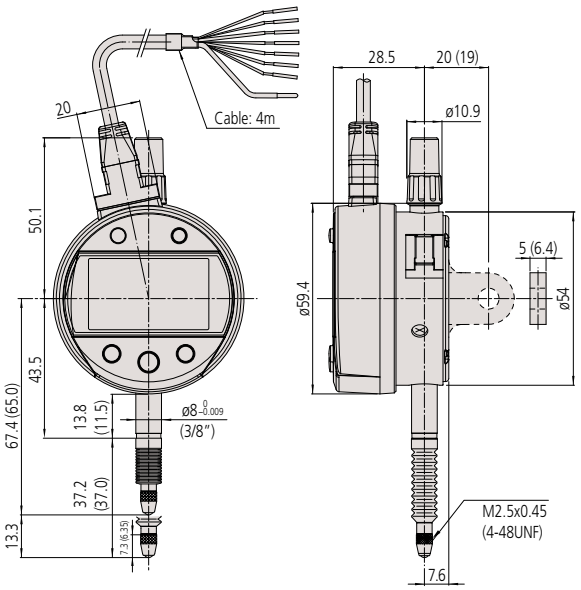

Technical Data

Accuracy: Refer to the list of specifications
Resolution: 0.001mm, .00005"/0.001mm
Display: LCD
Length standard: ABSOLUTE electrostatic capacitance type linear encoder
Max. response speed: Unlimited
Measuring force: 2.5N or less
Power supply: DC 5-24V±10%
Dust/Water protection level: IP54

Function

Data output (–NG/OK/NG signal, NPN open collector), Remote control (hold-preset, preset-recall, zero-set), Origin-Set, Preset (up to 3 values), Zero-Set, Analog-Bar, go/no-go judgment, Max/Min/Runout value holding, Counting direction switching, Power ON/OFF, inch/mm conversion (on inch/metric models only), calibration mode

Internal calculations using the simple formula of [F(x) = Ax] are available.

Alarm: Low voltage, Counting value composition error, Overflow error, Tolerance limit setting error

Optional Accessories

902011: Spindle lifting lever* (ISO/JIS type)
902794: Spindle lifting lever* (ANSI/AGD type)
540774: Spindle lifting cable* (Stroke: .4" / 10mm)
125317: Rubber boot
———: Backs (See page F-33.)
———: Contact points (See page F-34.)
21EAA194: Connecting Cable (1m)**
21EAA190: Connecting Cable (2m)**
21EZA345: Digimatic Power Supply Unit**

*When using the spindle lifting lever/cable, IP54 is not guaranteed.
** Used only for calibration mode and for automated testing with an i-Checker

Output pattern

Wire	– NG	OK	+ NG	Composition error
Orange (– NG)	Low	High	High	High
Green (OK)	High	Low	High	High
Brown (+ NG)	High	High	Low	High
LED	Red	Green	Red	Red (blinking)
LCD	<	O	>	"x.xxE" indication

I/O Specifications

Wire	Signal	I/O	Description
Black	– V (GND)	—	Connected to minus (-) terminal
Red	+ V (GND)	I	Power supply (5-24VDC)
Orange	– NG	O	Tolerance judgment result output: Only the terminal corresponding to a judgment result is set to the below level.
Green	OK	O	
Brown	+ NG	O	
Yellow	PRESET_RECALL ZERO	I	External input terminal: If the relevant terminal is set to the low level, its signal becomes true.
Blue	PEAK_START	I	
Shield	FG	—	Connected to GND

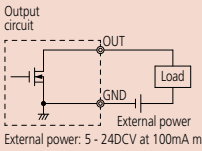

External power: 5 - 24DCV at 100mA max.

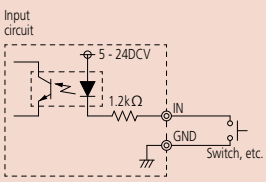

Input current: Max. 20mA

Digimatic Indicator ID-H

SERIES 543 — High-Accuracy and High-Functional Type

SPC

Mitutoyo guarantees the product quality
PROPRIETARY INSPECTION CERTIFICATE
Mitutoyo guarantees the product quality

Technical Data

Accuracy: Refer to the list of specifications
Resolution: 0.0005mm/0.001mm or .00002"/.00005" /.0001"/0.0005mm/0.001mm
Display: LCD
Length standard: Linear encoder
Max. response speed: 1000mm/s
Measuring force: 2.0N/2.5N* or less (*60mm range models)
Power supply: 6V DC (via AC adaptor)

Function

Origin-set/Preset, Zeroset, go/no-go judgment, Max/Min value hold, Runout measurement, Resolution switching, Counting direction switching, Power ON/OFF, Data output, inch/mm conversion (on inch/metric models only)
Alarm: Low voltage, Counting value composition error, Overflow error, Tolerance limit setting error

Standard Accessories

06AEG180JA: AC Adapter 120v
137693: Lifting Lever

Optional Accessories

936937: SPC cable (40" / 1m)
965014: SPC cable (80" / 2m)
21EAA131: RS-232C cable (80" / 2m)
21EZA099: Remote controller
540774: Spindle lifting cable (stroke: .4" / 10mm)
21EZA101: Spindle lifting knob
264-504-5A: Digimatic Min-processor DP-1VR
21EZA152A: FREE PARAMETER SETTING SOFTWARE
———: Backs (See page F-33.)
———: Contact points (See page F-34.)

Application

Difference/Runout measurement
Example: Indicator travel from points A to D
Difference (or Total Runout) is displayed as A. Dimensions B (maximum value) and C (minimum value) can be recalled from memory with a simple key sequence.

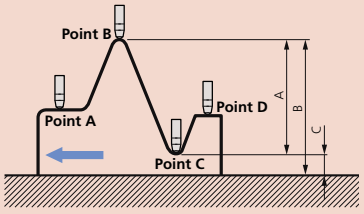

Order No.	A	B	C	D	E
543-561A	251.3	47.3	30.48	60	7.3
543-562A	250.35	46.35	30.48	60	6.35
543-563A	311.3	77.3	60.96	90	7.3
543-564A	310.35	76.35	60.96	90	6.35

FEATURES

- This new generation digital indicator offers the excellent accuracy and functionality expected from this class of indicator. Take advantage of its high accuracy backed by 0.5µm / .00002" resolution, remote control functionality via a handheld controller (or an RS-232C interface) and easy runout measurements with the analog bar display.
- The maximum, minimum, or runout value can be displayed during measurement.
- Go/no-go judgment is performed by setting the upper and lower tolerances. If a judgment result is out of tolerance, the display backlighting changes from green to red, so tolerance judgment can be made at a glance.
- With SPC data output.
- With RS-232C input/output.



21EZA099
Remote controller (optional)



543-561A



543-564A

SPECIFICATIONS

Inch/Metric Stem dia. 3/8" #4-48 UNF Thread

Resolution	Range	Order No.	Model	Accuracy
.00002", .00005", .0001", 0.0005mm, 0.001mm	1.2" / 30.4mm	**543-562A**	ID-H530E	0.0015mm
	2.4" / 60.9mm	**543-564A**	ID-H560E	0.0025mm

Metric Stem ø 8mm M2.5 X 0.45 Thread

Resolution	Range	Order No.	Model	Accuracy
0.0005mm, 0.001mm	30.4mm	**543-561A**	ID-H530	0.0015mm
	60.9mm	**543-563A**	ID-H560	0.0025mm

DIMENSIONS

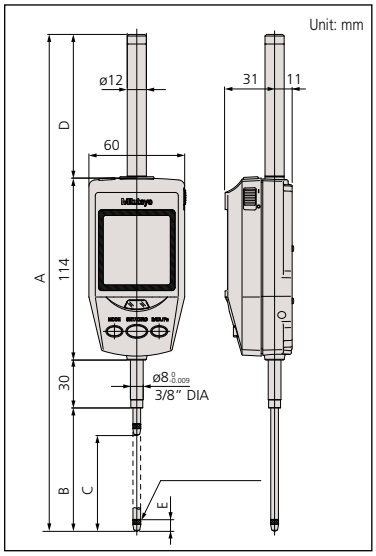

Tolerance judgment



Analog bar display



Max/Min value measurement



Runout measurement



Resolution switching



Mitutoyo

ABSOLUTE Digimatic Indicator ID-F

SERIES 543 — With Back-lit LCD

FEATURES

- With ABSOLUTE linear encoder technology, once the measurement reference point has been set it, will not be lost when the power is turned on.
- Go/no-go judgment is performed by setting the upper and lower tolerances. If a judgment result is out of tolerance, the display backlighting changes from green to red, so tolerance judgment can be made at a glance.



- The maximum, minimum, or runout value can be displayed during measurement.
- An analog bar indicator has been integrated to handle upper/lower limit approaching and zero approaching. The display range can be changed.
- With SPC data output.



SPECIFICATIONS

Inch/Metric Stem dia. 3/8" #4-48 UNF Thread

Resolution	Range	Order No.	Model	Accuracy
.00005", .0001", .0005", .001", 0.001mm, 0.01mm	1" / 25.4mm	**543-552A**	ID-F125E	.00012"
	2" / 50.8mm	**543-558A**	ID-F150HE	.00012"

Metric Stem ø 8mm M2.5 X 0.45 Thread

Resolution	Range	Order No.	Model	Accuracy
0.001mm, 0.01mm	25mm	**543-551A**	ID-F125	0.003mm
	50mm	**543-557A**	ID-F150H	0.003mm

DIMENSIONS

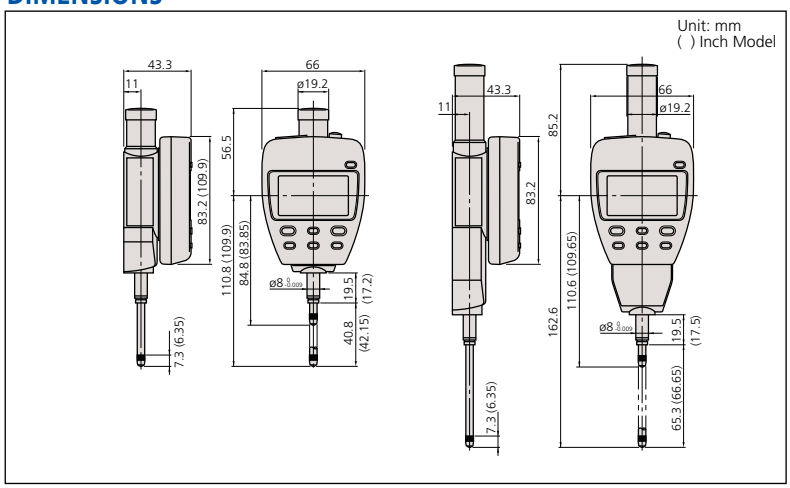

Technical Data

Accuracy: Refer to the list of specifications
Resolution: 0.01mm/0.001mm or .00005"/.0001"/.0005"/.001"/0.001mm/0.01mm
Display: LCD
Length standard: ABSOLUTE electrostatic capacitance type linear encoder
Max. response speed: Unlimited
Measuring force: 1.8N/2.3N* or less (*50mm range models)
Power supply: 9V DC (via AC adaptor)

Function

Origin-set/Preset, Zeroset, Go/no-go judgment, Max/Min value hold, Runout measurement, Resolution switching, Counting direction switching, Power ON/OFF, Data output, inch/mm conversion (on inch/metric models only)
Alarm: Low voltage, Counting value composition error, Overflow error, Tolerance limit setting error

Standard Accessories

06AEG302JA: AC Adapter 120v
137693: Lifting Level

Optional Accessories

936937: SPC cable (40" / 1m)
965014: SPC cable (80" / 2m)
540774: Spindle lifting cable (stroke: .4" / 10mm)
02ACA571: Auxiliary spindle spring for 25mm/1" models*
02ACA773: Auxiliary spindle spring for 50mm/2" models*
264-504-5A: Digimatic Min-processor DP-1VR
543-004-1: Digimatic presetter
———: Backs (See page F-33.)
———: Contact points (See page F-34.)
*Required when orienting the indicator upside down.

Application

Difference/Runout measurement
Example: Indicator travel from points A to D
Difference (or Total Runout) is displayed as A. Dimensions B (maximum value) and C (minimum value) can be recalled from memory with a simple key sequence.

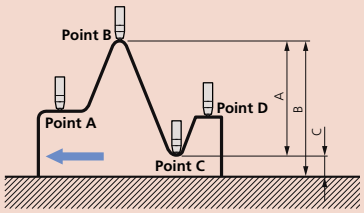

ABSOLUTE Digimatic Indicator ID-N / B

SERIES 543 — With Dust/Water Protection Conforming to IP66



Technical Data

Accuracy: Refer to the list of specifications
Resolution: 0.01mm, 0.01mm/0.001mm, .0005"/0.01mm or .0005"/.00005"/0.01mm/0.001mm
Display: LCD
Length standard: ABSOLUTE electrostatic capacitance-type linear encoder
Max. response speed: Unlimited
Measuring force: 2.5N (2.0N: Back plunger type)
Battery: SR44 (1 pc.), **938882**
Battery life: Approx. 7000 hours under normal use
Dust/Water protection level: IP66

Function

Zero-setting, Presetting, Direction switching, Tolerance judgment, Display hold, Data output, inch/mm conversion (on inch/metric models only)
Alarm: Low voltage, Counting value composition error, Overflow error, Tolerance limit setting error

Optional Accessories

21EZA105: Lifting knob (for ISO/JIS model, ID-N only)
21EZA150: Lifting knob (for AGD model, ID-N only)
21EZA145: Lug (for JIS/ISO model)
21EZA146: Lug (for AGD model)
02ACA376: Rubber boot (for ID-N, NBR)
238774: Rubber boot (for ID-N, silicon)
125317: Rubber boot (for ID-B, NBR)
21EAA212: Rubber boot (for ID-B, silicon)
21EAA194: SPC cable (40" / 1m)
21EAA190: SPC cable (80" / 2m)
21EAA210: Bifurcated connecting cable with zero-setting terminal (40" / 1m)
21EAA211: Bifurcated connecting cable with zero-setting terminal (80" / 2m)
———: Contact points (See page F-34.)







FEATURES

- Proven ABSOLUTE sensor.
- Rated to IP66 water- and dust-proofing standard, and oil resistance improved.
- Slim body design is advantageous for multi-point measurements.
- Improvement in workability with the LCD readout-rotation function.
- Back plunger design (ID-B).
- Built-in tolerance judgment function.
- Switchable resolution.
- Waterproof data output connector.
- Built-in hold/preset function.



Slim type ID-N
543-576



Back plunger type ID-B
543-586

ID-B Digimatic Indicators

SPECIFICATIONS

Metric Stem ø 8mm M2.5 X 0.45 Thread

Resolution	Range	Order No.	Model No.	Accuracy	Measuring Force
0.01mm	5.0mm	**543-580**	ID-B1005	0.02mm	2.0N or less
0.001mm	5.0mm	**543-585**	ID-B105	0.003mm	2.0N or less

Inch / Metric Stem dia. 3/8" #4-48 UNF Thread

Resolution	Range	Order No.	Model No.	Accuracy	Measuring Force
.0005" / 0.01mm	.22" / 5.6mm	**543-581**	ID-B1005E	.0008" / 0.02mm	2.0N or less
.0005" / 0.01mm .00005" / 0.001mm	.22" / 5.6mm	**543-586***	ID-B105E	.00012" / 0.003mm	2.0N or less

ID-N Digimatic Indicators

Metric Stem ø 8mm M2.5 X 0.45 Thread

Resolution	Range	Order No.	Model No.	Accuracy	Measuring Force
0.01mm	5.0mm	**543-570**	ID-N1012	0.02mm	2.0N or less
0.001mm / 0.01mm	5.0mm	**543-575**	ID-N112	0.003mm	2.0N or less

Inch / Metric Stem dia. 3/8" #4-48 UNF Thread

Resolution	Range	Order No.	Model No.	Accuracy	Measuring Force
.0005" / 0.01mm	.5" / 12.7mm	**543-571**	ID-N1012E	.0008" / 0.02mm	2.0N or less
.0005" / 0.01mm .00005" / 0.001mm	.5" / 12.7mm	**543-576***	ID-N112E	.00012" / 0.003mm	2.0N or less

DIMENSIONS AND MASS

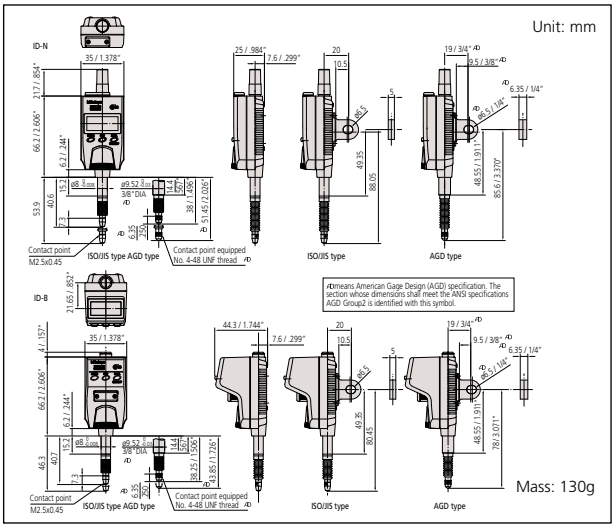

EC Counter

SERIES 542 — Low-Cost, Assembly-Type Display Unit

FEATURES

- Employed the DIN size (96 X 48mm) and mount-on-panel configuration, which greatly facilitates the incorporation into a system.
- Possible to produce either tolerance judgment output or Digimatic output.



542-007A

SPECIFICATIONS

Order No.	Description
542-007A	EC Counter

DIMENSIONS

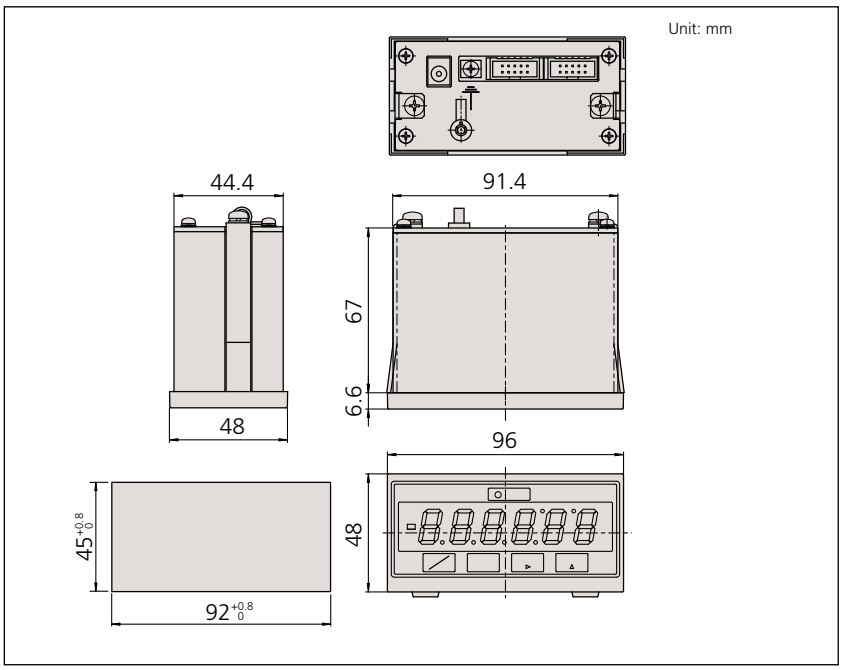

EC Counter

Technical Data

Applicable gage: LGD, LGS, All SPC output gages
Resolution: 0.001mm, 0.01mm, .00005. .0005", .0001"
No. of gage input: 1
Display: 6-digit LED and a negative [-] sign
Function: Preset
Go/no-go judgment
Output (open-collector): 3-Step limit signal*, Digimatic
External control: Preset, Data hold
Power supply: Via AC adaptor
Dimensions (W x D x H): 96 x 48 x 84.6mm
Mass: 500g
*Requires C162-155 (see Optional Accessories)

Standard Accessories

06AEG302JA: AC Adapter

Optional Accessories

936937: SPC cable (40"/1m)
965014: SPC cable (80"/1m)
214938: PJ-2 (DC Plug)
C162-155: Go/no-go judgment cable

Dial Indicators

Description of Icon

Icon	Description
	Reverse reading type suitable for depth and step measurement
	One revolution type for easy and error-free reading
	Double scale spacing type, easy to read
	Shockproof
	Waterproof
	With damper at lowest rest point
	Jeweled bearing
STOP	Peak retaining
2X	Long stem
	Dustproof
	With coaxial revolution counter
90°	Back plunger
	Adjustable hand
	Double-face type

FEATURES: S Series

- Revolutionary stem-bush design for trouble-free stem clamping (longer clamping range).
- No through screw hole on the frame for high dust-resistance.

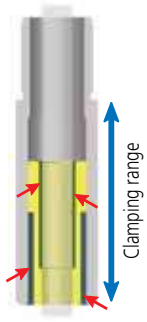

Clearance to avoid direct influence of clamping force

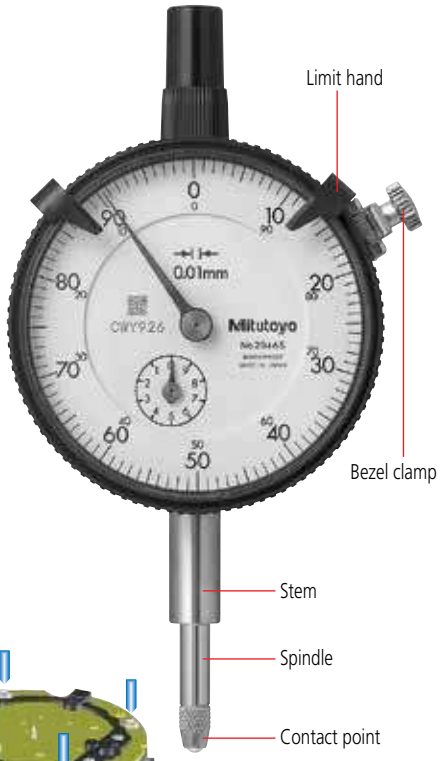

- Involute curved lifting lever for smooth movement of spindle and dovetail joint for tool-less connection.
- Grater rigidity in the bearing plate for reducing the retracing error (20%) and 4-screw mounting for increasing impact resistance.

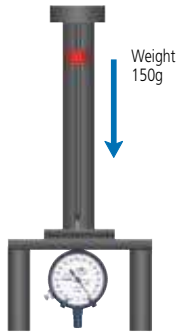

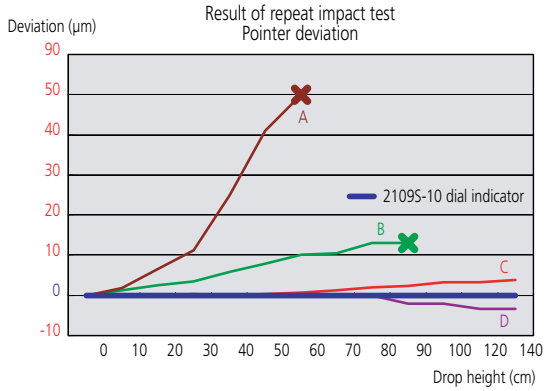

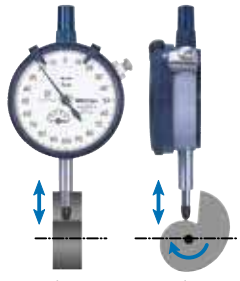
Endurance testing with cam
Rotation speed: 120rpm

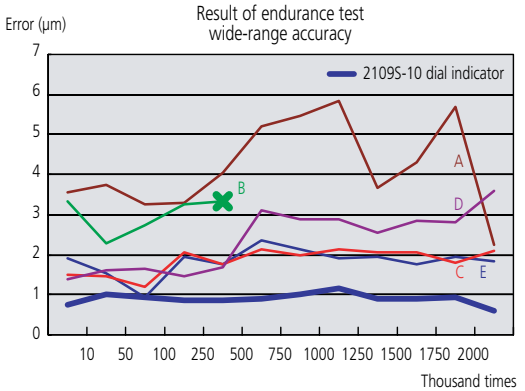

Dial Indicators

SERIES 0 - Compact type

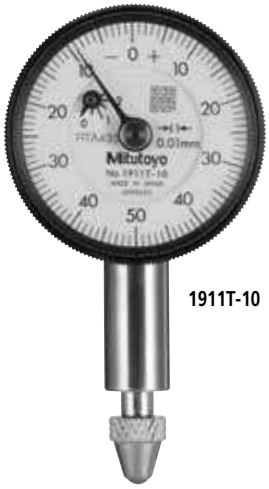

1911T-10

Balanced scale



1911T-10
Jeweled bearing

Balanced scale



1913T-10
Jeweled bearing

SPECIFICATIONS

Inch Stem dia. 3/8", #4-48 UNF Thread — ANSI/AGD type

Graduation	Range	Range/rev	Dial reading	Order No. w/ lug	Order No. Flat-back	Accuracy First 2.5 Rev	Accuracy Overall Accuracy	Measuring force	Jeweled bearing
.0001"	.025"	.01"	0-5-0	**1925T-10**	**1925TB-10**	±.0002"	±.0002"	0.3 - 1.8N	✔
.0005"	.05"	.02"	0-10-0	**1923T-10**	**1923TB-10**	±.0005"	±.0005"	0.3 - 1.8N	✔
.001"	.1"	.04"	0-20-0	**1921T-10**	**1921TB-10**	±.001"	±.001"	0.3 - 1.8N	✔

Metric Stem ø 8mm, M2.5 x 0.45 Thread — ISO/JIS type

Graduation	Range	Range/Rev	Dial reading	Order No. w/ lug	Order No. Flat-back	Accuracy Any Rev	Accuracy Overall Accuracy	Measuring force	Jeweled bearing
0.002mm	0.5mm	0.2mm	0-100-0	**1913T-10**	**1913TB-10**	±5µm	±6µm	0.3 - 1.8N	✔
0.01mm	2.5mm	1mm	0-50-0	**1911T-10**	**1911TB-10**	±10µm	±12µm	0.3 - 1.8N	✔

Jeweled bearing

DIMENSIONS

Inch Model Unit: Inch

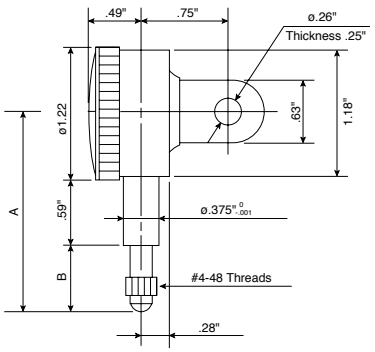

Order Number	A	B
1925T-10	1.48"	.28"
1923T-10	1.51"	.31"
1921T-10	1.58"	.37"

Metric Model Unit: mm

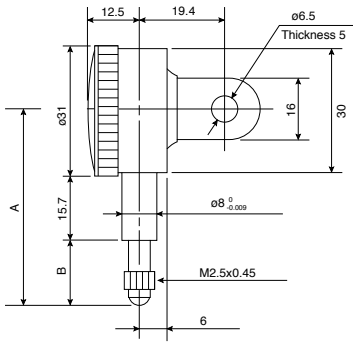

Order Number	A	B
1911T-10	42	11.5
1913T-10	39.5	9

Dial Indicators

SERIES 1



1803S-10

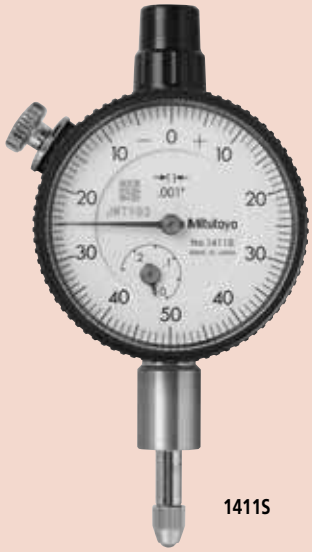

1411S



1506S

SPECIFICATIONS

Inch Stem dia. 3/8" #4-48 UNF Thread ☐ ANSI/AGD type

Graduation	Range	Range / Rev	Dial reading	Order No. (W/Lug)	Order No. (Flat-back)	Accuracy First 2.5 Rev	Accuracy Overall Accuracy	Measuring force	Shockproof	Jeweled bearing
.0001"	.025"	.01"	0-10	**1802S-10**	**1802SB-10**	±.0001"	±.0001"	1.4N or less	✔	✔
.0001"	.025"	.01"	0-5-0	**1803S-10**	**1803SB-10**	±.0001"	±.0001"	1.4N or less	✔	✔
.0005"	.1"	.04"	0-40	**1670S**	**1670SB**	±.0005"	±.0005"	1.4N or less		
.0005"	.1"	.04"	0-20-0	**1671S**	**1671SB**	±.0005"	±.0005"	1.4N or less		
.0005"	.125"	.05"	0-50	**1506S**	**1506SB**	±.0005"	±.0005"	1.4N or less		
.0005"	.125"	.05"	0-25-0	**1507S**	**1507SB**	±.0005"	±.0005"	1.4N or less		
.001"	.125"	.05"	0-50	**1780S**	**1780SB**	±.001"	±.001"	1.4N or less		
.001"	.125"	.025"	0-25-0	**1781S**	**1781SB**	±.001"	±.001"	1.4N or less		
.001"	.25"	.1"	0-100	**1410S**	**1410SB**	±.001"	±.001"	1.4N or less		
.001"	.25"	.1"	0-100	**1410S-10**	**1410SB-10**	±.001"	±.001"	1.4N or less		✔
.001"	.25"	.1"	0-50-0	**1411S**	**1411SB**	±.001"	±.001"	1.4N or less		

Shockproof Jeweled bearing

Metric Metric - ANSI Standard Stem dia. 3/8"#4-48 UNF Thread yellow dial face ☐ ANSI/AGD type

Graduation	Range	Range /Rev	Dial reading	Order No. (W/Lug)	Order No. (Flat-back)	Accuracy First 2.5 Rev	Accuracy Overall Accuracy	Measuring force
0.002mm	0.5mm	0.2mm	0-20	**1010S-11**	**1010SB-11**	±0.002mm	±0.002mm	1.5N or less
0.002mm	0.5mm	0.2mm	0-10-0	**1011S-11**	**1011SB-11**	±0.002mm	±0.002mm	1.5N or less
0.01mm	2.5mm	1mm	0-100	**1230S-01**	**1230SB-01**	±0.01mm	-	1.4N or less
0.01mm	2.5mm	1mm	0-50-0	**1231S-01**	**1231SB-01**	±0.01mm	-	1.4N or less
0.01mm	5mm	1mm	0-100	**1044S-01**	**1044SB-01**	±0.01mm	±0.013mm	1.4N or less
0.01mm	5mm	1mm	0-50-0	**1045S-01**	**1045SB-01**	±0.01mm	±0.013mm	1.4N or less

DIMENSIONS

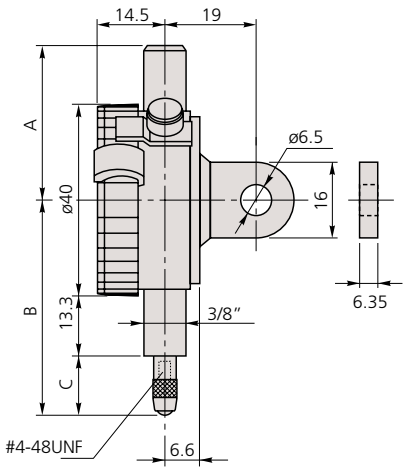

Unit: mm

Order No.	A	B	C
1802S(B)-10	32.5	43.4	9.6
1803S(B)-10	32.5	43.4	9.6
1670S(B)	32.5	44.2	10.4
1671S(B)	32.5	44.2	10.4
1506S(B)	32.5	45.2	11.4
1507S(B)	32.5	45.2	11.4
1780S(B)	32.5	45.2	11.4
1781S(B)	32.5	45.2	11.4
1410S(B)	32.5	48.7	14.9
1410S(B)-10	32.5	48.7	14.9
1411S(B)	32.5	48.7	14.9
1230S(B)-01	32.5	44.2	10.4
1231S(B)-01	32.5	44.2	10.4
1044S(B)-01	32.5	46.7	12.9
1045S(B)-01	32.5	46.7	12.9

Mitutoyo

Dial Indicators

SERIES 1



1040S



1013S



1045S



1109S-10

Metric Stem ø 8mm M2.5 X 0.45 Thread

ISO/JIS type

Graduation	Range	Range / Rev	Dial reading	Order No. (W/Lug)	Order No. (Flat-back)	Accuracy First 2.5 Rev	Accuracy Overall Accuracy	Measuring force	Shockproof	Waterproof	Jeweled bearing
0.001mm	1mm	0.2mm	0-100-0	**1109S-10**	**1109SB-10**	±0.001mm	±0.007mm	1.5N or less	✔		✔
0.002mm	1mm	0.2mm	0-100-0	**1013S-10**	**1013SB-10**	±0.002mm	±0.01mm	1.5N or less	✔		✔
0.005mm	3.5mm	0.5mm	0-50	**1124S**	**1124SB**	±0.005mm	±0.013mm	1.4N or less			✔
0.01mm	3.5mm	0.5mm	0-50	**1040S**	**1040SB**	±0.01mm	±0.013mm	1.5N or less			
0.01mm	3.5mm	0.5mm	0-25-0	**1041S**	**1041SB**	±0.01mm	±0.013mm	1.5N or less			
0.01mm	4mm	1mm	0-50-0	**1003T**	**1003TB**	±0.01mm	±0.013mm	0.3 - 1.4N			
0.01mm	5mm	1mm	0-100	**1044S**	**1044SB**	±0.01mm	±0.013mm	1.5N or less			
0.01mm	5mm	1mm	0-100	**1044S-60**	**1044SB-60**	±0.01mm	±0.013mm	2N or less		✔	
0.01mm	5mm	1mm	0-100	**1044S-10**	**1044SB-10**	±0.01mm	±0.013mm	.4N or less	✔		
0.01mm	5mm	1mm	0-50-0	**1045S**	**1045SB**	±0.01mm	±0.013mm	1.4N or less			

Shockproof Waterproof Jeweled bearing



1003T



1044S

DIMENSIONS

Unit: mm

ISO/JIS Type

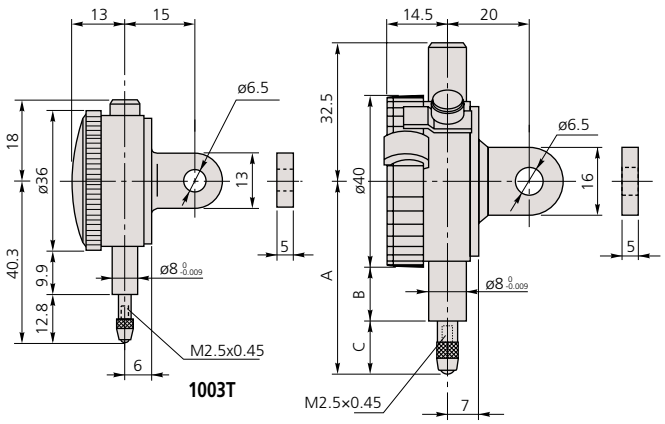

Order No.	A	B	C
1040S	46	13	12.5
1041S	46	13	12.5
1044S	47.5	13	14
1044S-10	47.5	13	14
1044S-60	57	11.5	25
1045S	47.5	13	14
1124S	46	13	12.5
1013S	49	13	15.5
1109S	49	13	15.5

Optional Accessories

———: Backs (See page F-33.)
———: Contact points (See page F-34.)

Dial Indicators

SERIES 1 — Compact One Revolution Type for Error-free Reading

One revolution type



1929S

Unlike many other dial indicators, the one-revolution dial indicator shows the entire spindle travel or range as one sweep of the hand, eliminating the possibility of reading errors due to miscounting the multiple revolutions. With one-revolution dial indicators, within tolerance and out of tolerance can't be misinterpreted. Unique shock-proof mechanism provides improved immunity to shock due to sudden spindle retraction caused by high impact.

Shockproof type
Dustproof type
Waterproof type
Jeweled bearing type



1929S
1929S-62



1900S-10
1900S-72

SPECIFICATIONS

Inch

Stem dia. 3/8", #4-48 UNF Thread

ANSI/AGD type

Graduation	Range (range/full stroke)	Dial reading	Order No.		Accuracy	Measuring force			—	—
			w/lug	Flat-back						
.0001"	.006" / .0079"	3-0-3	**1910S-72**	**1910SB-72**	±.0001"	1.4N or less	✔	✔	—	—
.0005"	.04" / .055"	20-0-20	**1909S-62**	**1909SB-62**	±.0005"	1.4N or less	✔	✔	—	—

Metric

Stem ø 8mm, M2.5 x 0.45 Thread

ISO/JIS type

Graduation	Range (range/full stroke)	Dial reading	Order No.		Accuracy	Measuring force				
			w/lug	Flat-back						
0.001mm	0.1mm / 0.14mm	50-0-50	**1900S-10**	**1900SB-10**	±0.005mm	1.5N or less	✔	—	—	✔
0.001mm	0.1mm / 0.14mm	50-0-50	**1900S-72**	**1900SB-72**	±0.006mm	1.5N or less	✔	✔	—	✔
0.01mm	1mm / 1.4mm	50-0-50	**1929S**	**1929SB**	±0.011mm	1.4N or less	✔	—	—	—
0.01mm	1mm / 1.4mm	50-0-50	**1929S-62**	**1929SB-62**	±0.011mm	1.4N or less	✔	✔	—	—

DIMENSIONS

Unit: mm

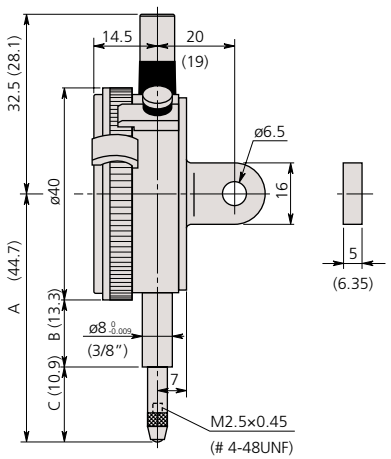

Order No.	A	B	C
1929S	47.5	13.8	13.7
1929S-62	47.5	13.8	13.7
1900S-10	53.5	16.8	16.7
1900S-72	53.5	16.8	16.7

( ): ANSI / AGD type

Optional Accessories

———: Backs (See page F-33.)
———: Contact points (See page F-34.)

Dial Indicators

SERIES 2 — Standard One Revolution Type for Error-free Reading

One revolution type.

Shockproof type | Waterproof type | Dustproof type | Jeweled bearing type

SPECIFICATIONS

Metric Stem ø 8mm, M2.5 x 0.45 Thread — ISO/JIS type

Graduation	Range (range/full stroke)	Dial reading	Order No. w/ lug	Order No. Flat-back	Accuracy	Measuring force	Shockproof	Waterproof	Dustproof	Jeweled bearing
0.001mm	0.08mm / 0.1mm	40-0-40	**2900S-10**	**2900SB-10**	±0.003mm	1.4N or less	✔	—	—	✔
0.001mm	0.08mm / 0.1mm	40-0-40	**2900S-70**	**2900SB-70**	±0.003mm	2.0N or less	✔	✔	—	✔
0.001mm	0.08mm / 0.1mm	40-0-40	**2900S-72**	**2900SB-72**	±0.003mm	2.0N or less	✔	—	✔	✔
0.001mm	0.16mm / 0.2mm	80-0-80	**2901S-10**	**2901SB-10**	±0.004mm	1.4N or less	✔	—	—	✔
0.01mm	0.8mm / 1mm	40-0-40	**2929S**	**2929SB**	±0.009mm	2.0N or less	✔	—	—	—
0.01mm	0.8mm / 1mm	40-0-40	**2929S-60**	**2929SB-60**	±0.009mm	2.0N or less	✔	✔	—	—
0.01mm	0.8mm / 1mm	40-0-40	**2929S-62**	**2929SB-62**	±0.009mm	2.0N or less	✔	—	✔	—
0.01mm	1.6mm / 2mm	80-0-80	**2959S**	**2959SB**	±0.013mm	1.4N or less	✔	—	—	—
0.01mm	0.5mm / 0.7.mm	25-0-25	—	**2971TB***	±0.008mm	0.4 - 1.4N	✔	—	✔	—
0.01mm	1mm / 1.4mm	50-0-50	—	**2972TB***	±0.008mm	0.4 - 1.4N	✔	—	✔	—
0.02mm	1.6mm / 2mm	80-0-80	—	**2973TB***	±0.016mm	0.4 - 1.4N	✔	—	✔	—
0.1mm	4mm / 10mm	2-0-2	**2928S**	**2928SB**	±0.040mm	1.4N or less	✔	—	—	—

* Flat-back type only. (Lug-on-center back is not available.)

DIMENSIONS

ISO/JIS Type

Unit: mm

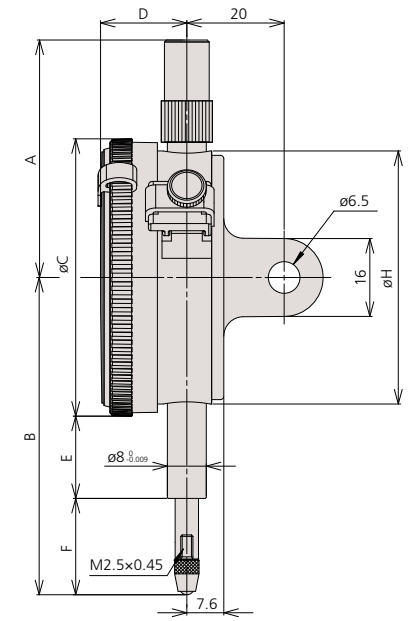

Order No.	A	B	C	D	E	F	H
2971TB	43.2	65.6	57	16.5	19.8	16.8	55
2972TB	43.2	66.0	57	16.5	19.8	17.2	55
2973TB	43.2	66.3	57	16.5	19.8	17.5	55
2929S	48.8	65.2	57	17.7	12.3	29.2	52
2929S-62	48.8	65.2	57	17.7	16.9	19.8	52
2929S-60	48.8	70	57	17.7	12.3	29.2	52
2959S	48.8	65.2	57	17.7	16.9	19.8	52
2900S-10	48.8	66	57	17.7	16.9	20.6	52
2900S-72	48.8	66	57	17.7	16.9	20.6	52
2900S-70	48.8	67	57	17.7	12.3	26.2	52
2901S-10	48.8	66.1	57	17.7	16.9	20.7	52
2928S	48.8	65.2	57	17.7	16.9	19.8	52



2900S-10



2929S
2929S-60
2929S-62



2959S



2900S-10
2900S-70
2900S-72



2901S-10

Optional Accessories

———: Backs (See page F-33.)
———: Contact points (See page F-34.)

Dial Indicators

SERIES 2 — Standard One Revolution Type for Error-free Reading



2909S-62



2978TB

FEATURES

- Unique shock-proof mechanism provides improved immunity to shock due to sudden spindle retraction caused by high impact.
- The crystal is hard coated for durability and scratch resistance.
- Approximately 40% lighter than conventional dial indicator.
- Improved resistance to shop-floor contaminants such as water and dust.
- Due to the spindle bushing being offset from the stem, spindle movement will not be hindered or jammed when clamping along the stem.
- A pair of limit hands are provided for quick and easy tolerance judgment (go/no-go).



One revolution type.

SPECIFICATIONS

Inch Stem 3/8" dia. , #4-48 UNF Thread ANSI/AGD type

Graduation	Range	Range/full stroke	Dial reading	Order No. w/ lug	Order No. Flat-back	Accuracy	Measuring force			
.0001"	.008"	.01"	4-0-4	**2910S-10**	**2910SB-10**	±.0001"	1.8N or less	✔		✔
.0001"	.008"	.01"	4-0-4	**2910S-72**	**2910SB-72**	±.0001"	2.5N or less	✔	✔	✔
.0005"	.04"	.05"	20-0-20	**2909S-62**	**2909SB-62**	±.0005"	2.5N or less	✔	✔	
.0005"	.02"	.028"	10-0-10	—	**2976TB***	±.0005"	0.4 - 1.4N	✔	✔	
.0005"	.04"	.055"	20-0-20	—	**2977TB***	±.0005"	0.4 - 1.4N	✔	✔	
.001"	.06"	.079"	30-0-30	—	**2978TB***	±.001"	0.4 - 1.4N	✔	✔	

*Flat-back type only. (Lug-on-center back is not available.)

Metric Stem 3/8" dia. , #4-48 UNF Thread Yellow Dial Face ANSI/AGD type

Graduation	Range	Range/full stroke)	Dial reading	Order No. w/ lug	Order No. Flat-back	Accuracy	Measuring force			
0.001mm	0.08mm	0.1mm	40-0-40	**2900S-73**	**2900SB-73**	±0.003mm	2.0N or less	✔	✔	✔

*Flat-back type only. (Lug-on-center back is not available.)

DIMENSIONS

Unit: inch

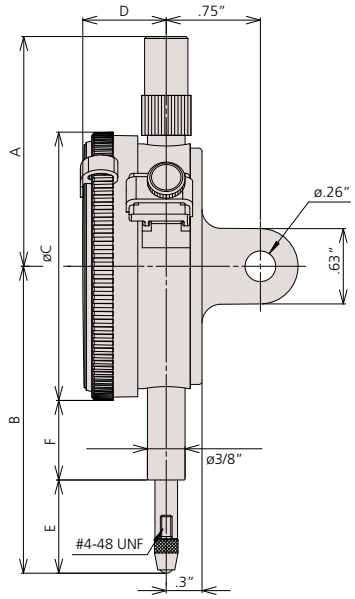

Order No.	A	B	C	D	E	F
2976TB	1.70	2.55	2.24	.65	.62	.78
2977TB	1.70	2.56	2.24	.65	.64	.78
2978TB	1.70	2.57	2.24	.65	.65	.78
2909S-62	1.92	2.04	2.24	.7	.36	.54
2910S-10	1.92	2.02	2.24	.7	.36	.54
2910S-72	1.92	2.02	2.24	.7	.36	.54
2900S-73	1.92	1.99	2.24	.7	.33	.54

Optional Accessories

———: Backs (See page F-33.)
———: Contact points (See page F-34.)

Mitutoyo

Special Dial Indicators

SERIES 2

Adjustable hand



2048S-10

Adjustable hand dial gage

The hand position can be adjusted independently of the vertical movement of the spindle by rotating the top knob.

STOP

Peak hold



2046S-80

Peak hold dial gage

A mechanism that stops the pointer and the spindle at the depressed position where the spindle is depressed makes the pointer stop and display the maximum value.

SPECIFICATIONS

Inch Stem dia. 3/8" #4-48 UNF Thread — ANSI/AGD type

Graduation	Range	Range /rev	Dial reading	Order No. w/lug	Order No. Flat-back	Accuracy First 2.5 Rev	Accuracy Overall Accuracy	Measuring force			
.001″	.5″	.1"	0-100	**2915S-10**	**2915SB-10**	±.001″	±.001"	1.8N or less	✔	✔	✔
.001″	.5″	.1"	0-50-0	**2918S-10**	**2918SB-10**	±.001″	±.001"	1.8N or less	✔	✔	✔

Metric Stem dia. 3/8" #4-48 UNF Thread, Yellow Dial Face — ANSI/AGD type

Graduation	Range	Range /rev	Dial reading	Order No. w/lug	Order No. Flat-back	Accuracy First 2.5 Rev	Accuracy Overall	Measuring force			
0.01mm	10mm	1mm	0-100	**2048S-11**	**2048SB-11**	±13µm	±0.013mm	1.4N or less	✔	✔	✔

Metric Stem ø 8mm, M2.5 x 0.45 Thread — ISO/JIS type

Graduation	Range	Range /rev	Dial reading	Order No. w/lug	Order No. Flat-back	Accuracy	Measuring force				
0.01mm	10mm	1mm	0-100	**2048S-10**	**2048SB-10**	±0.015mm	1.4N or less	✔	✔	✔	
0.01mm	10mm	1mm	0-100	**2046S-80**	**2046SB-80**	±0.015mm	5.0N or less				✔

DIMENSIONS

Order No.	A	B	C
2915S-10, 2918S-10	52.2	64.1	22
2048S-11	47.7	59.5	17.4

Unit: mm

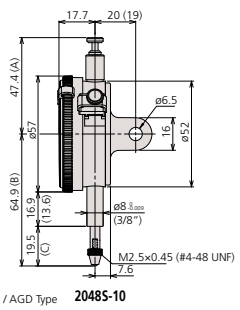

( ): ANSI / AGD Type

2048S-10

Unit: mm

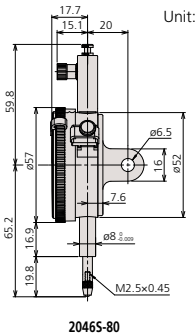

2046S-80

Dial Indicators

SERIES 2 — Standard Type, Inch Reading



2416S



2803S-10

Optional Accessories

———: Backs (See page F-33.)
———: Contact points (See page F-34.)

SPECIFICATIONS

Inch Stem 3/8" dia. #4-48 UNF Thread ☐ ANSI/AGD type

Graduation	Range	Range /Rev	Dial Reading	Order No.		Accuracy		Measuring force			
				w/lug	Flat-back	First 2.5 Rev	Overall				
.0001″	.025″	.01″	0-10	**2802S-10**	**2802SB-10**	±.0001″	±.0001″	2.5N or less	✔		✔
.0001″	.025″	.01″	0-5-0	**2803S-10**	**2803SB-10**	±.0001″	±.0001″	2.5N or less	✔		✔
.0001″	.05″	.01″	0-10	**2804S-10**	**2804SB-10**	±.0001″	±.0002″	2.0N or less	✔		✔
.0001″	.05″	.01″	0-5-0	**2805S-10**	**2805SB-10**	±.0001″	±.0002″	2.0N or less	✔		✔
.0001″	.05″	.01″	10-0	**2905S-10**	**2905SB-10**	±.0001″	±.0002″	2.0N or less	✔	✔	✔
.0001″	.05″	.01″	0-5-0	**2923S-10**	**2923SB-10**	±.0001″	±.0002″	2.0N or less	✔	✔	✔
.0001″	.25″	.01″	0-10	**2356S-10**	**2356SB-10**	±.0001″	±.0005″	2.0N or less			✔
.0001″	.5″	.01″	0-10	**2358S-10**	**2358SB-10**	±.0001″	±.0008″	2.0N or less			✔
.0005″	.125″	.05″	0-50	**2506S**	**2506SB**	±.0005″	±.0005″	1.8N or less			
.0005″	.125″	.05″	0-25-0	**2507S**	**2507SB**	±.0005″	±.0005″	1.8N or less			
.0005″	.125″	.05″	0-25-0	**2922S**	**2922SB**	±.0005″	±.0005″	1.8N or less		✔	
.0005″	.5″	.05″	0-50	**2514S**	**2514SB**	±.0005″	±.0015″	1.8N or less			
.0005″	1″	.05″	0-50	**2776S**	**2776SB**	±.0005″	±.002″	2.5N or less			
.001″	.5″	.1″	0-100	**2414S**	**2414SB**	±.001″	±.001″	1.8N or less			
.001″	.5″	.1″	100-0	**2914S**	**2914SB**	±.001″	±.001″	0.4-1.8N		✔	
.001″	.5″	.1″	0-50-0	**2415S**	**2415SB**	±.001″	±.001″	1.8N or less			
.001″	1″	.1″	0-100	**2416S**	**2416SB**	±.001″	±.002″	1.8N or less			
.001″	1″	.1″	0-100	**2416S-06***	**2416SB-06***	±.001″	±.002″	1.8N or less			
.001″	1″	.1″	0-100	**2416S-10**	**2416SB-10**	±.001″	±.002″	1.8N or less			✔
.001″	1″	.1″	0-50-0	**2417S**	**2417SB**	±.001″	±.002″	1.8N or less			
.001″	1″	.1″	100-0	**2904S**	**2904SB**	±.001″	±.002″	1.8N or less		✔	
.001″	2″	1″	0-100	**2424S-19**	**2424SB-19**	±.001″	±.003″	2.5N or less	✔		✔

* Black Face

Shockproof type Reverse reading type Jeweled bearing type

Dial Indicators

SERIES 2 — Standard Type, Inch Reading



2506S



2923S-10



2424S-19

DIMENSIONS

Drawing A

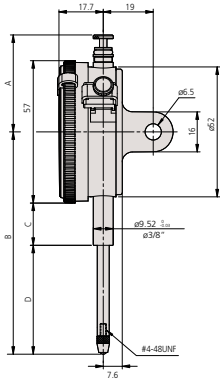

Drawing B

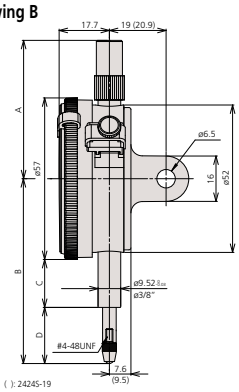

Unit: mm

2 Group Inch

Order No.	A	B	C	D	Drawing
2356S(B)-10	48.8	57.2	13.6	15.1	B
2358S(B)-10	38.9	63.6	13.6	21.5	A
2414S(B)	38.9	64.1	13.6	22	A
2415S(B)	38.9	64.1	13.6	22	A
2416S(B)	38.9	76.8	13.6	34.7	A
2416S(B)-06	38.9	76.8	13.6	34.7	A
2416S(B)-10	38.9	76.8	13.6	34.7	A
2417S(B)	38.9	76.8	13.6	34.7	A
2424S(B)-19	118.5	142.5	54.3	59.7	B
2506S(B)	48.8	54.3	13.6	12.2	B
2507S(B)	48.8	54.3	13.6	12.2	B
2514S(B)	38.9	64.1	13.6	22	A

Order No.	A	B	C	D	Drawing
2776S(B)	38.9	76.8	13.6	34.7	A
2802S(B)-10	48.8	51.4	13.6	9.3	B
2803S(B)-10	48.8	51.4	13.6	9.3	B
2804S(B)-10	48.8	51.7	13.6	9.6	B
2805S(B)-10	48.8	51.7	13.6	9.6	B
2904S(B)	38.9	76.8	13.6	34.7	A
2905S(B)-10	48.8	51.7	13.6	9.6	B
2914S(B)	38.9	64.1	13.6	22	A
2915S(B)-10	52.2	63.3	13.6	21.2	A
2918S(B)-10	52.2	63.3	13.6	21.2	A
2922S(B)	48.8	54.3	13.6	12.2	B
2923S(B)-10	48.8	51.7	13.6	9.6	B

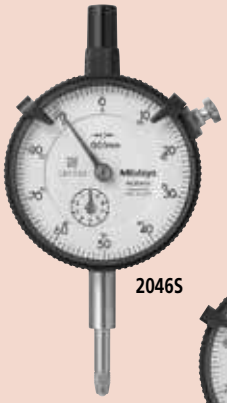

2046S



2046S-60



Dial Indicators

SERIES 2 — Metric Standard Type

Series 2 dial indicators are Mitutoyo's most popular and have the widest application.

FEATURES

- Standard 0.01mm graduation dial gages having an outer frame with an outside diameter of 57mm. All types come with limit pins and an outer-frame clamp as standard.
- The outer clamp and lifting lever (optional) can be attached to either the right or left side. These parts can be easily installed and removed without tools.
- Secured adhesion between the outer frame and crystal, as well as the use of an O-ring, protect against water and oil permeation via the front face.
- The stem spindle is made of high-strength quench-hardened stainless steel for longevity.
- A carbide contact point is used.
- The grand gear uses stainless steel that is resistant to wear and deformation.
- Application of a hard coating on the surface of the crystal makes the gage highly scratch- and chemical-resistant.

Shockproof type | Waterproof type | Long stem type | Jeweled bearing type

Double scale spacing type | w/ coaxial revolution counter | Reverse reading type | w/ damper at lowest rest point

SPECIFICATIONS

Metric — Stem dia. ø8mm M2.5 x 0.45 Thread

ISO/JIS type

Graduation	Range	Range / Rev	Dial reading	Order No. w/ lug	Order No. Flat-back	Accuracy	Measuring Force								
0.001mm	1mm	(0.1mm)	0-100	**2110S-10**	**2110SB-10**	±0.005mm	1.5N or less	✔			✔	✔			
0.001mm	1mm	(0.1mm)	0-100	**2110S-70**	**2110SB-70**	±0.005mm	2.0N or less	✔	✔		✔	✔			
0.001mm	1mm	(0.2mm)	0-100-0	**2109S-10**	**2109SB-10**	±0.005mm	1.5N or less	✔			✔				
0.001mm	1mm	(0.2mm)	0-100-0	—	**2109SLB-10**	±0.005mm	1.5N or less	✔		✔	✔				
0.001mm	1mm	(0.2mm)	0-100-0	**2109S-70**	**2109SB-70**	±0.005mm	2.0N or less	✔	✔		✔				
0.001mm	2mm	(0.2mm)	0-100-0	**2113S-10**	**2113SB-10**	±0.007mm	1.5N or less	✔			✔				
0.001mm	5mm	(0.2mm)	0-100-100	**2118S-10**	**2118SB-10**	±0.010mm	1.5N or less				✔				
0.001mm	5mm	(0.2mm)	0-100-0	**2119S-10**	**2119SB-10**	±0.010mm	1.5N or less				✔				
0.005mm	5mm	(0.5mm)	0-50	**2124S-10**	**2124SB-10**	±0.012mm	1.5N or less				✔				
0.01mm	5mm	(1mm)	0-100	**2044S**	**2044SB**	±0.012mm	1.4N or less								
0.01mm	5mm	(1mm)	0-100	**2044S-09**	**2044SB-09**	±0.013mm	1.4N or less	✔							
0.01mm	5mm	(1mm)	0-100	**2044S-60**	**2044SB-60**	±0.012mm	2.5N or less		✔						
0.01mm	5mm	(1mm)	0-50-0	**2045S**	**2045SB**	±0.012mm	1.4N or less							✔	
0.01mm	10mm	(1mm)	0-100	**2046S**	**2046SB**	±0.013mm	1.4N or less								
0.01mm	10mm	(1mm)	0-100	—	**2046SLB**	±0.013mm	1.4N or less			✔					
0.01mm	10mm	(1mm)	0-100	**2046S-09**	**2046SB-09**	±0.015mm	1.4N or less	✔							
0.01mm	10mm	(1mm)	0-100	**2046S-60**	**2046SB-60**	±0.013mm	2.5N or less		✔						
0.01mm	10mm	(1mm)	0-100	**2310S-10**	**2310SB-10**	±0.015mm	1.4N or less				✔		✔		
0.01mm	10mm	(1mm)	100-0	**2902S**	**2902SB**	±0.013mm	1.4N or less							✔	
0.01mm	10mm	(1mm)	0-50-0	**2047S**	**2047SB**	±0.013mm	1.4N or less								
0.01mm	20mm	(1mm)	0-100	**2050S**	**2050SB**	±0.020mm	2.0N or less								✔
0.01mm	20mm	(1mm)	0-100	**2050S-60**	**2050SB-60**	±0.020mm	2.5N or less		✔						
0.01mm	20mm	(1mm)	0-100	**2050S-19**	**2050SB-19**	±0.020mm	2.0N or less	✔			✔				✔
0.01mm	20mm	(1mm)	0-100	**2320S-10**	**2320SB-10**	±0.020mm	2.0N or less				✔		✔		✔
0.01mm	30mm	(1mm)	0-100	**2052S**	**2052SB**	±0.025mm	2.5N or less								✔
0.01mm	30mm	(1mm)	0-100	**2052S-19**	**2052SB-19**	±0.025mm	2.5N or less	✔			✔				✔
0.01mm	30mm	(1mm)	0-100	**2330S-10**	**2330SB-10**	±0.025mm	2.5N or less				✔		✔		✔
0.01mm	30mm	(1mm)	100-0	**2952S**	**2952SB**	±0.025mm	2.5N or less							✔	✔

*Use in a vertical position only (contact point downward).



2046S
2046S-09



2046S-60



2047S

Mitutoyo

Dial Indicators

SERIES 2 — Metric Standard Type

DIMENSIONS

ISO/JIS Type

Unit: mm

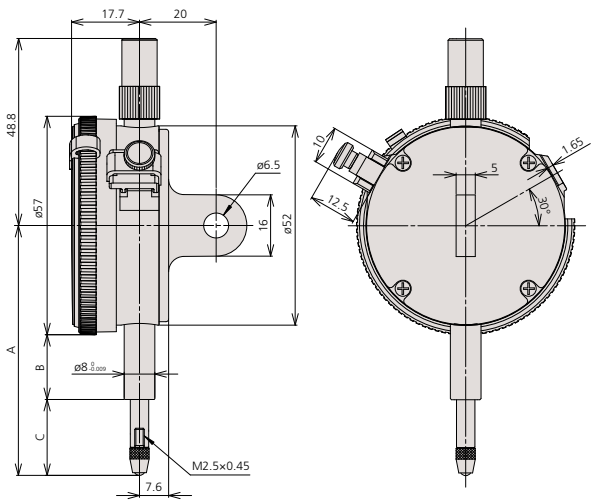

Order No.	A	B	C
2124S-10	60.3	16.9	14.9
2110S-10	66.5	16.9	21.1
2110S-70	67.5	12.3	26.7
2109S-10	60.5	16.9	15.1
2109S-70	65.3	12.3	24.5
2113S-10	61	16.9	15.6
2118S-10	60.3	16.9	14.9
2119S-10	60.3	16.9	14.9
2044S	65.2	16.9	19.8
2044S-09	65.2	16.9	19.8
2044S-60	70	12.3	29.2
2045S	65.2	16.9	19.8
2046S	65.2	16.9	19.8
2046S-09	65.2	16.9	19.8
2046S-60	70	12.3	29.2
2310S-10	65.2	16.9	19.8
2902S	65.2	16.9	19.8
2047S	65.2	16.9	19.8

ISO/JIS Type

Unit: mm

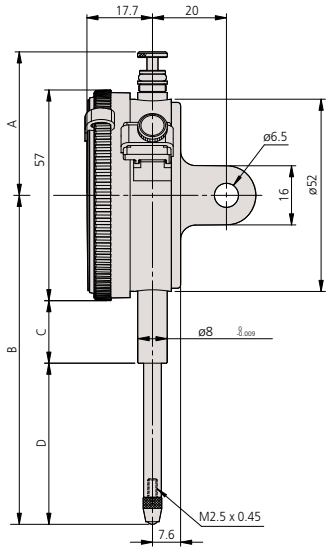

Order No.	A	B	C	D
2050S	38.8	75.2	16.9	29.8
2050S-60	59.8	87.2	12.3	46.4
2050S-19	38.8	75.2	16.9	29.8
2320S-10	38.8	75.2	16.9	29.8
2052S	38.8	88.7	16.9	43.3
2052S-19	38.8	88.7	16.9	43.3
2330S-10	38.8	88.7	16.9	43.3
2952S	38.8	88.7	16.9	43.3



2902S



2310S-10



2044S
2044S-60
2044S-09



2045S

Optional Accessories

———: Backs (See page F-33.)
———: Contact points (See page F-34.)

Dial Indicators

SERIES 2 — ANSI / AGD Type Metric Dial Indicator

SPECIFICATIONS

Metric Stem dia. 3/8", #4-48 UNF Thread Yellow Dial Face ANSI/AGD type

Graduation	Range	Range / Rev	Dial reading	Order No. w/ lug	Order No. Flat-back	Accuracy First 2.5 Rev	Accuracy Overall	Measuring force		
0.001mm	1mm	0.2mm	0-100-0	**2109S-11**	**2109SB-11**	±0.003mm	±0.004mm	1.5N or less	✔	✔
0.001mm	5mm	0.2mm	0-100-0	**2119S-11**	**2119SB-11**	±0.007mm	±0.01mm	1.5N or less	✔	
0.01mm	2.5mm	1mm	0-100	**2230S-01**	**2230SB-01**	±0.01mm	±0.01mm	1.4N or less		
0.01mm	2.5mm	1mm	0-50-0	**2231S-01**	**2231SB-01**	±0.01mm	±0.01mm	1.4N or less		
0.01mm	10mm	1mm	0-100	**2046S-01**	**2046SB-01**	±0.01mm	±0.013mm	1.4N or less		
0.01mm	10mm	1mm	0-100	**2046S-11**	**2046SB-11**	±0.01mm	±0.013mm	1.4N or less	✔	
0.01mm	10mm	1mm	0-50-0	**2047S-01**	**2047SB-01**	±0.01mm	±0.013mm	1.4N or less		
0.01mm	10mm	1mm	0-50-0	**2047S-11**	**2047SB-11**	±0.01mm	±0.013mm	1.4N or less	✔	
0.01mm	10mm	1mm	100-0	**2902S-01**	**2902SB-01**	±0.01mm	±0.013mm	1.4N or less		
0.01mm	20mm	1mm	0-100	**2050S-01**	**2050SB-01**	±0.01mm	±0.02mm	2.0N or less		
0.01mm	20mm	1mm	0-100	**2050S-11**	**2050SB-11**	±0.01mm	±0.02mm	2.0N or less	✔	
0.01mm	25mm	1mm	0-100	**2056S-01**	**2056SB-01**	±0.01mm	±0.025mm	2.5N or less		

DIMENSIONS

Unit: mm

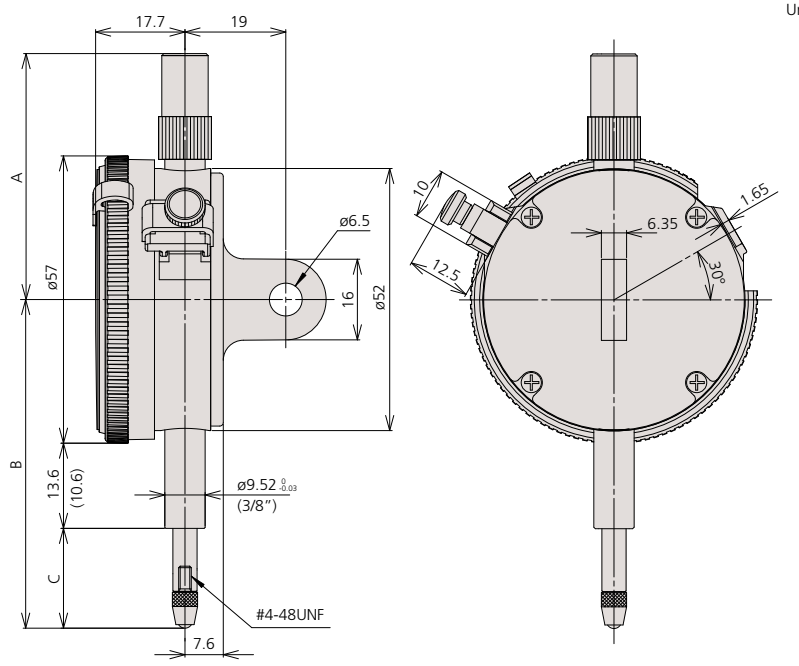

( ): water proof type

Order No.	A	B	C
2109S-11	48.8	51.4	9.3
2119S-11	48.8	55.8	13.7
2230S-01	48.8	53.6	11.5
2231S-01	48.8	53.6	11.5
2046S-01	48.8	61.1	19.0
2046S-11	48.8	61.1	19.0
2047S-01	48.8	61.1	19.0
2902S-01	48.8	61.1	19.0
2050S-01	38.8	71.1	29.0
2050S-11	38.8	71.1	29.0
2056S-01	38.8	76.1	34.0

Optional Accessories

———: Backs (See page F-33.)
———: Contact points (See page F-34.)

Mitutoyo

Dial Indicators

SERIES 3 — Large Dial Face and Long Stroke

- Dial gages with a large-diameter (78mm / 3.07") graduation face for easy reading.



3109S-10



3416S

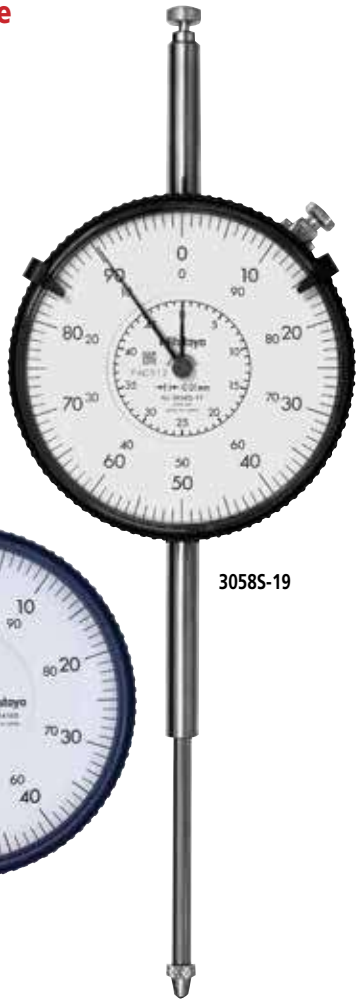

3058S-19



3046S



3047S



3050S



3052S-19

DIMENSIONS

Unit: mm

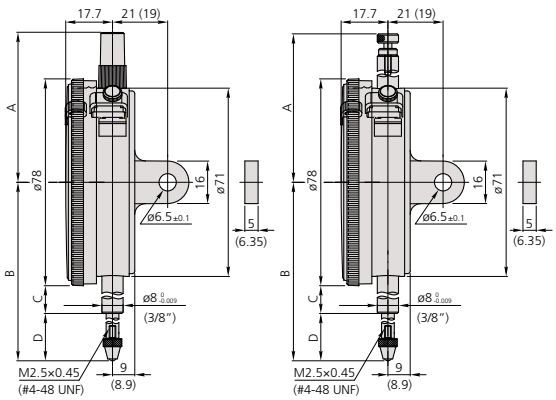

( ): ANSI / AGD Type

Order No.	A	B	C	D
3052S(B)-11	72.9	102.4	25.9	37.5
3058S(B)-11	81.9	147.1	50.6	57.5
3414S(B)	51.3	73.4	12.6	21.8
3415S(B)	51.3	73.4	12.6	21.8
3416S(B)	51.3	86.1	12.6	34.5
3417S(B)	51.3	86.1	12.6	34.5
3424S(B)-19	84	149.3	50.6	59.7
3426S(B)-19	120.9	198.1	73.9	85.2
3428S(B)-19	141.9	243.9	94.9	110.0
3802S(B)-10	61.2	59.7	12.6	8.1
3803S(B)-10	61.2	59.7	12.6	8.1
3046S(B)	61.2	75.5	15.9	20.6
3047S(B)	61.2	75.5	15.9	20.6
3050S(B)	52.6	94.0	25.9	29.1
3052S(B)-19	72.9	104.3	25.9	39.4
3060S(B)-19	120.9	202.3	73.9	89.4
3062S(B)-19	141.9	243.3	94.9	109.4
3109S(B)-10	61.2	79.3	25.9	14.1

Dial Indicators

SERIES 3 — Large Dial Face

SPECIFICATIONS

Inch Stem 3/8" DIA. #4-48 UNF Thread ☐ ANSI/AGD type

Graduation	Range	Range /rev	Dial reading	Order No.		Accuracy		Measuring Force			
				W/ lug	Flat-back	First 2.5 Rev	Overall Accuracy				
.0001"	.025"	.01"	0-10	**3802S-10**	**3802SB-10**	±.0001"	±.0001"	2.0N or less	✔	✔	
.0001"	.025"	.01"	0-5-0	**3803S-10**	**3803SB-10**	±.0001"	±.0001"	2.0N or less	✔	✔	
.001"	.5"	.1"	±0-100	**3414S**	**3414SB**	±.001"	±.001"	1.8N or less			
.001"	.5"	.1"	0-50-0	**3415S**	**3415SB**	±.001"	±.001"	1.8N or less			
.001"	1"	.1"	±0-100	**3416S**	**3416SB**	±.001"	±.002"	1.8N or less			
.001"	1"	.1"	0-50-0	**3417S**	**3417SB**	±.001"	±.002"	1.8N or less			
.001"	2"	.1"	±0-100	**3424S-19**	**3424SB-19**	±.001"	±.003"	3.0N or less	✔	✔	✔
.001"	3"	.1"	±0-100	**3426S-19**	**3426SB-19**	±.001"	±.005"	3.0N or less	✔	✔	✔
.001"	4"	.1"	±0-100	**3428S-19**	**3428SB-19**	±.001"	±.005"	3.2N or less	✔	✔	✔

Metric Stem 3/8" DIA. #4-48 UNF Thread, Yellow dial face ☐ ANSI/AGD type

Graduation	Range	Range /rev	Dial reading	Order No.		Accuracy		Measuring Force			
				W/ lug	Flat-back	First 2.5 Rev	Overall Accuracy				
0.01mm	30mm	1mm	±0-100	**3052S-11**	**3052SB-11**	±0.01mm	±0.03mm	2.5N or less	✔	✔	✔
0.01mm	50mm	1mm	±0-100	**3058S-11**	**3058SB-11**	±0.01mm	±0.04mm	3.0N or less	✔	✔	✔

Metric Stem ø 8mm M2.5x0.45 Thread ☐ ISO/JIS type

Graduation	Range	Range /rev	Dial reading	Order No.		Accuracy	Measuring Force				
				W/ lug	Flat-back						
0.001mm	1mm	0.2mm	0-10-0	**3109S-10**	**3109SB-10**	±0.005mm	1.5N or less	✔	✔		
0.01mm	10mm	1mm	0-100	**3046S**	**3046SB**	±0.015mm	1.4N or less				
0.01mm	10mm	1mm	0-50-0	**3047S**	**3047SB**	±0.015mm	1.4N or less				
0.01mm	20mm	1mm	0-100	**3050S**	**3050SB**	±0.020mm	2.0N or less				✔
0.01mm	30mm	1mm	0-100	**3052S-19**	**3052SB-19**	±0.025mm	2.5N or less	✔	✔	✔	
0.01mm	50mm	1mm	0-100	**3058S-19**	**3058SB-19**	±0.035mm	3.0N or less	✔	✔	✔	
0.01mm	80mm	1mm	0-100	**3060S-19***	**3060SB-19***	±0.045mm	3.0N or less	✔	✔	✔	
0.01mm	100mm	1mm	0-100	**3062S-19***	**3062SB-19***	±0.050mm	3.2N or less	✔	✔	✔	

*use in a vertical position only

Shockproof type

w/ coaxial revolution counter

w/ damper at lowest rest point

Jeweled bearing type

Optional Accessories

———: Backs (See page F-33.)
———: Contact points (See page F-34.)

Mitutoyo

Dial Indicators

SERIES 4 — Large Dial Face

- Dial gages with a large-diameter (92mm / 3.62") graduation face for easy reading.
- All types come standard with limit pins and an outer frame clamp.



4046S

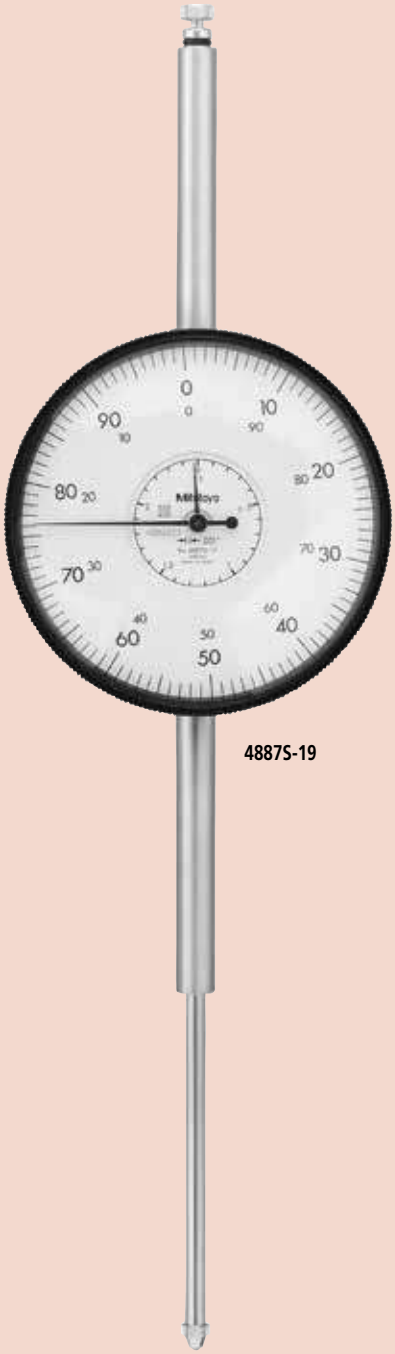

4887S-19

SPECIFICATIONS

Inch Stem 3/8" DIA. #4-48 UNF Thread — ANSI/AGD type

Graduation	Range	Range /rev	Dial reading	Order No.		Accuracy		Measuring Force			
				W/ lug	Flat-back	First 2.5 Rev	Overall accuracy				
.001"	3"	.1"	±0-100	**4887S-19**	**4887SB-19**	±.001"	±.005"	3.0N or less	✔	✔	✔

Metric Stem ø 8mm M2.5x0.45 Thread — ISO/JIS type

Graduation	Range	Range /rev	Dial reading	Order No.		Accuracy		Measuring Force		
				W/ lug	Flat-back	First 2.5 Rev	Overall accuracy			
0.01mm	10mm	1mm	0-100	**4046S**	**4046SB**	± 0.01mm	± 0.015mm	1.4N or less	✔	✔

DIMENSIONS

Unit: mm

4046S(B)

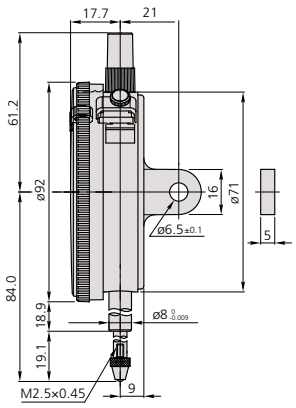

4887S(B)-19

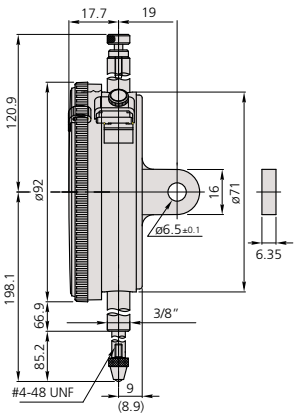

Optional Accessories

———: Backs (See page F-33.)
———: Contact points (See page F-34.)

Back-Plunger Dial Indicators

SERIES 1 and 2

Mitutoyo's back-plunger dial indicators are built with the measuring spindles on the back of the units. This type of indicator offers the same precision and durability as all other Mitutoyo dial indicators, and operates effectively with optional holding bars.

- Back-plunger dial gages are suitable for mounting onto leveling machine tool tables or inspection jigs, and for use in small spaces where the graduations of standard dial gages are difficult to see.
- Model No. 1960T, which uses Mitutoyo's proprietary shock-proofing mechanism, has excellent durability and shock resistance.

One revolution type Shockproof type Jeweled bearing type

SPECIFICATIONS

Inch Series 1 Stem 3/8" dia. , #4-48 UNF Thread ANSI/AGD type

Graduation	Range	Range / Rev	Dial reading	Order No.	Accuracy	Measuring Force			
.001″	.04″	.05″*	20-0-20	**1961T**	±.001″	0.4 - 1.4N	✔	✔	
.001″	.2″	.05″	0-50	**1166T**	±.001″	0.4 - 1.4N			
.001″	.2″	.05″	0-25-0	**1167T**	±.001″	0.4 - 1.4N			
.001″	.2″	.05″	50-0	**1168T**	±.001″	0.4 - 1.4N			✔

*Full stroke

Metric Series 1 Stem ø8mm, M2.5x0.45 Thread ISO/JIS type

Graduation	Range	Range / Rev	Dial reading	Order No.	Accuracy	Measuring Force				Remarks
0.01mm	1mm	1.27mm*	50-0-50	**1960T**	±0.014mm	0.4 - 1.4N	✔	✔		—
0.01mm	5mm	1mm	0-100	**1160T**	±0.016mm	0.4 - 1.4N				—
0.01mm	5mm	1mm	100-0	**1162T**	±0.016mm	0.4 - 1.4N			✔	—

*Full stroke

Inch Series 2 Stem 3/8" dia. , #4-48 UNF Thread ANSI/AGD type

Graduation	Range	Range/full stroke	Dial reading	Order No.	Accuracy	Measuring Force			
.0001″	.008″	.01″	4-0-4	**2991T-10**	±.0002″	0.4 - 1.5N	✔	✔	✔
.0005″	.04″	.05″	20-0-20	**2961T**	±.0005″	0.4 - 1.4N	✔	✔	

Metric Series 2 Stem ø8mm, M2.5x0.45 Thread ISO/JIS type

Graduation	Range	Range/full stroke	Dial reading	Order No.	Accuracy	Measuring Force			
0.001mm	0.1mm	0.14mm	50-0-50	**2990T-10**	±0.005mm	0.4 - 1.5N	✔	✔	✔
0.01mm	1mm	1.27mm	50-0-50	**2960T**	±0.014mm	0.4 - 1.4N	✔	✔	

Optional Accessories

136567: Holding bar (ø6mm, L=81mm)
136568: Holding bar (ø8mm, L=81mm)
124625: Holding bar (.25″ DIA, L=3.19″)

———: Backs (See page F-31.)
———: Contact points (See page F-34.)

Back-Plunger Dial Indicators

SERIES 1 and 2



2960T

Balanced scale



Graduation: 0.01mm,
Measuring range: 1mm

2960T
- One revolution
- Shockproof
- Back plunger



2990T-10

Balanced scale



Graduation: 0.01mm,
Measuring range: 1mm

2990T-10
- One revolution
- Shockproof
- Back plunger
- Jeweled bearing

DIMENSIONS

ISO/JIS Type

Unit: mm

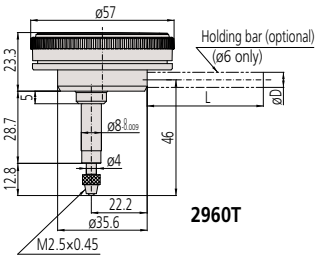

2960T

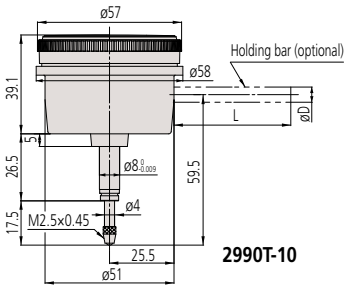

2990T-10

ANSI/AGD Type

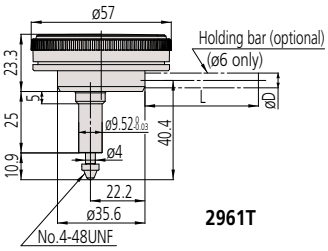

2961T

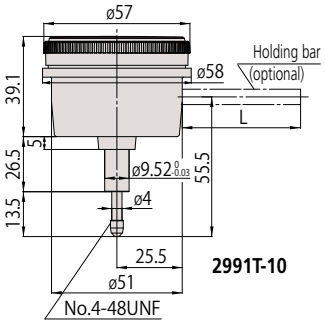

2991T-10

DIMENSIONS

ANSI/AGD Type

Unit: mm

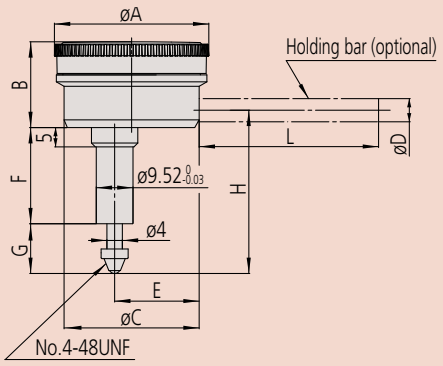

Order No.	A	B	C	E	F	G	H
1166T	40	22.1	35.6	22.2	25	10.9	42
1167T	40	22.1	35.6	22.2	25	10.9	42
1168T	40	22.1	35.6	22.2	25	10.9	42
1961T	40	22.1	35.6	22.2	25	10.9	40

ISO/JIS Type

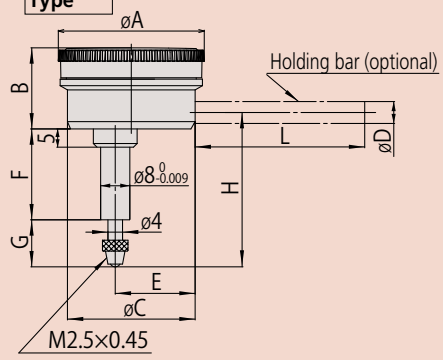

Order No.	A	B	C	E	F	G	H
1160T	40	22.1	35.6	22.2	25	13.8	43.3
1162T	40	22.1	35.6	22.2	25	13.8	43.3
1960T	40	22.1	35.6	22.2	28.7	12.8	46

Note 1: Refer to pages F-51 to F-54 for contact point details.
Note 2: Dimensions of the inch (ANSI/AGD Type) dial indicator partly differ from those of the metric (ISO/JIS Type) indicator.
Note 3: Inch (ANSI/AGD Type) dial indicators are provided with a stem of 3/8" dia. and #4-48UNF thread mount for the contact point.

Holding bar (optional)

Order No.	øD	L
21AAA166	ø6mm	42mm
136567	ø6mm	81mm
124625	ø6.35mm	81mm
21AAA167	ø6.35mm	42mm
21AAA168	ø8mm	42mm
136568	ø8mm	81mm

* øD and L: detail shown in drawing below.

Backs

Optional Accessory for Digimatic and Dial Indicators

There are two ways to support Digimatic and dial indicators--by either holding the stem or the lug on the back of the indicator. The back of the indicator may need to be replaced for special applications. A variety of backs are available for Mitutoyo Digimatic and dial indicators.

Application

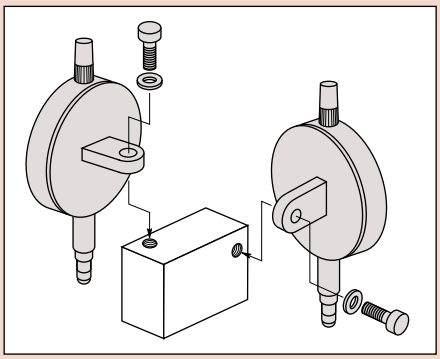

ID-S (543-6xx only)*1

02ACB420: Lug-on-center back for ISO/JIS type
02ACB430: Lug-on-center back for AGD type
02ACB440: Flat back
02ACB610: Back with post
02ACB620: Adjustable back for AGD type
02ACB630: Adjustable back (ISO/JIS type)
02ACB640: Back with offset lug
02ACB650: Magnetic back
02ACB660: Back with screw mount for AGD type
02ACB670: Back with screw mount (ISO/JIS type)
02ACB680: Back with adjustable bracket

*1 Includes the required adapter.



SPECIFICATIONS

Description		Order No.			
		Series 0 (ø31mm) 1003 (ø36mm)	Series 1 (ø41mm)	Series 2 ID-C (all types), ID-F, ID-H ID-S (543-7xx only) (Ø57mm)	Series 3, 4 (ø77, 91mm)
Flat Back 	Unit: mm 	**191559**: a=1.0 **137906**: for 1003 a=1.0	**101211**: a=2.2 **136872**: for water-proof type **191559**: for 1911, 1913-10	**101039**: a=2.5 **21AZB231**: for waterproof of S type	**100836**: a=3.0
Lug-on-Center Back 	Unit: mm 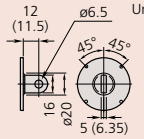	**190561**: Metric type **190139**: Inch type **137905**: for 1003	**101210**: metric type **101307**: inch type **190561**: for 1911, 1913-10	**101040**: metric type **101306**: inch type **21AZB230**: for waterproof of S type	**100691**: metric type **100797**: inch type
Magnetic Back 	Unit: mm 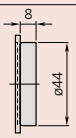	—	**Special order**	**900928**	**900929**
Back with Offset Lug 	Unit: mm 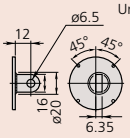	—	**Special order**	**101167**	**100837**
Back with Post 	Unit: mm 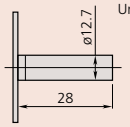	—	**193172**	**101169**	**100839**
Back with Screw Mount 	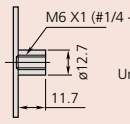	—	**193173**: M6x1, **193174**: #1/4-28UNF,	**136023**: M6x1 **101170**: #1/4-28UNF	**136024**: M6x1 **100840**: #1/4-28UNF
Adjustable Back 	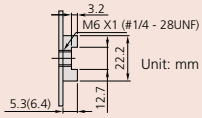	—	**136025**: M6x1 **129721**: #1/4-20UNC	**136026**: M6x1 **101168**: #1/4-20UNC	**136027**: M6x1 **100838**: #1/4-20UNC
Back with Dovetail	Unit: mm 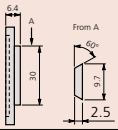	—	—	**900008**	**Special order**
Back with Adjustable Bracket 	Unit: mm 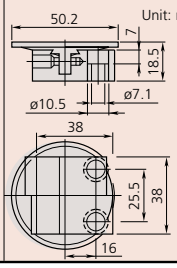	—	—	**129902**: Dovetail Rack Back **901964**: Dovetail bracket for rack back	—

( ): ANSI / AGD Type

Mitutoyo

Contact Points

Optional Accessories for Digimatic and Dial Indicators and Linear Gages

ø.118" (ø3mm) Ball oint

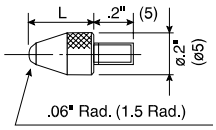

4-48UNF

L	Carbide	Sapphire	Ruby	Plastic
.25"	**21BZB005***	—	—	—
.28"	—	—	—	**902018**
.3"	**131262**	**131263**	**131264**	—
.6"	**131265**	**131266**	**131267**	—
1"	**131268**	**131269**	**131270**	—

M2.5 x 0.45mm

L	Carbide	Sapphire	Ruby	Plastic
7.3mm	**901312***	—	—	**901994**
8mm	**120045**	**120046**	**120047**	—
15mm	**120049**	**120050**	**120051**	—
25mm	**120053**	**120054**	**120055**	—

*Furnished with standard metric dial indicators.

Shell point

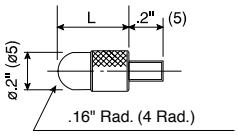

4-48UNF

L	Order No.
3/32"(.094")	**193697**
5/32"(.156")	**101184**
1/4"(.25")	**21AAA031**
3/8"(.375")	**21AAA032**
1/2"(.5")	**101185**
5/8"(.625")	**21AAA033**
3/4"(.75")	**101186**
7/8"(.875")	**21AAA034**
1"	**101187**
1 1/4"(1.25")	**21AAA035**
1 1/2"(1.5")	**21AAA036**
1 3/4"(1.75")	**21AAA037**
2"	**21AAA038**
2 1/4"(2.25")	**21AAA039**
2 1/2"(2.5")	**21AAA040**
2 3/4"(2.75")	**21AAA041**
3"	**21AAA042**

M2.5 x 0.45mm

L	Order No.
5mm	**101386**
10mm	**101118**
15mm	**137393**
20mm	**101387**
25mm	**101388**
30mm	**21AAA254**

ø.16 Ball Point

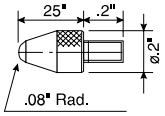

4-48UNF

Order No.
21BZB005

ø1.8mm Ball Point

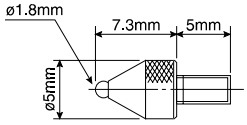

M2.5 x 0.45mm

Order No.
101122

Needle point

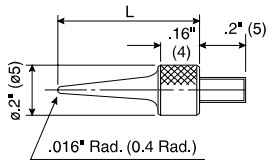

4-48UNF

L	Order No.
.6"	**21AAA030**
1"	**21AAA046**
11/2"	**21AAA047**
2"	**21AAA048**

M2.5 x 0.45mm

L	Order No.
15mm	**101121**
17mm	**137413**

Flat point

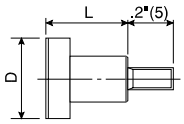

4-48UNF

D	L	Order No.
Ø1/2"	3/8"	**101188**
Ø3/8"	3/8"	**101189**

M2.5 x 0.45mm

D	L	Order No.
Ø10mm	10mm	**101117**

Flat-point, Carbide tip

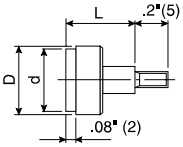

4-48UNF

D	d	L	Order No.
Ø.2"	Ø.17"	.2"	**131259**
Ø.27"	Ø.25"	.4"	**131260**
Ø.41"	Ø.37"	.4"	**131261**

M2.5 x 0.45mm

D	d	L	Order No.
Ø5.2mm	Ø4.3mm	5mm	**120041**
Ø7mm	Ø6.5mm	10mm	**120042**
,10.5mm	Ø9.5mm	10mm	**120043**

Spherical-point, Carbide tip

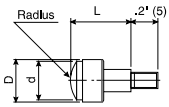

4-48UNF

D	d	Radius	L	Order No.
ø.2"	ø.17"	.2"	.2"	**131273**
ø.27"	ø.16"	.16"	.4"	**131274**
ø.41"	ø.37"	.4"	.4"	**131275**

M2.5 x 0.45mm

D	d	Radius	L	Order No.
ø5.2mm	ø4.3mm	5mm	5mm	**120058**
ø7mm	ø6.5mm	7mm	10mm	**120059**
ø10.5mm	ø9.5mm	10mm	10mm	**120060**

Needle point, Carbide tipped

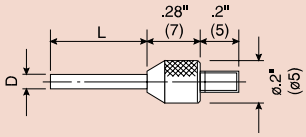

4-48UNF

D	L	Order No.
ø.018"	.12"	**131281**
ø.04"	.12"	**131280**
ø.06"	.5"	**131279**
ø.078"	.04"	**131271**

M2.5 x 0.45mm

D	L	Order No.
ø0.45mm	2.5mm	**120066**
ø1mm	2.5mm	**120065**
ø1.5mm	13mm	**120064**
ø2mm	1mm	**120056**
ø2mm	8mm	**137257**

ø.2" (ø5mm) Flat point

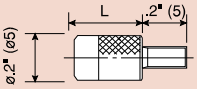

4-48UNF

L	Order No.
5/16"	**133017**
1/2"	**21AAA043**
3/4	**21AAA044**
1	**21AAA045**

M2.5 x 0.45mm

L	Order No.
8mm	**131365**

Knife-edge point, Carbide tipped

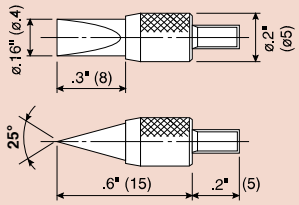

4-48UNF

Order No.
131282

M2.5 x 0.45mm

Order No.
120067

Spherical point

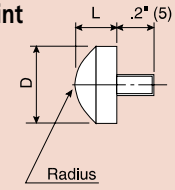

4-48UNF

D	L	Radius	Order No.
ø.5"	.125"	.28"	**101205**
ø.375"	.09375"	.35"	**101204**

M2.5 x 0.4 5mm

D	L	Radius	Order No.
ø10mm	5mm	7mm	**101119**

Contact Points

Optional Accessories for Digimatic and Dial Indicators and Linear Gages

60˚ Conical point

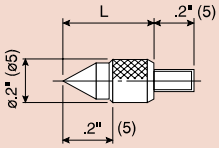

4-48UNF

L	Order No.
1/2"	101190

M2.5 x 0.45mm

L	Order No.
10mm	101120

90˚ Conical point

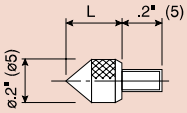

4-48UNF

L	Order No.
1/4"	101191

M2.5 x 0.45mm

L	Order No.
5mm	101385

Blade point, Carbide tip

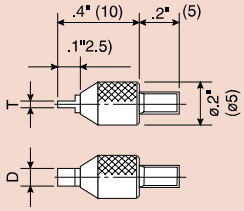

4-48UNF

D	T	Order No.
.08"	.016"	131276
.08"	.024"	131277
.16"	.04"	131278

M2.5 x 0.45mm

D	T	Order No.
2mm	0.4mm	120061
2mm	0.6mm	120062
4mm	1mm	120063

90˚ Conical point, Carbide tipped

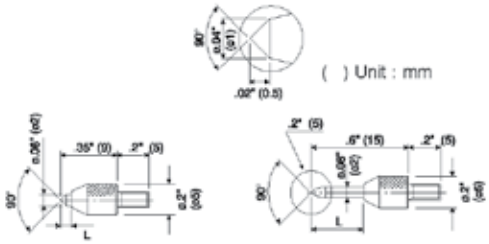

4-48UNF

L	Order No.
.08"	131272

4-48UNF

L	Order No.
.3"	131283

M2.5 x 0.45mm

L	Order No.
2mm	120057

M2.5 x 0.45mm

L	Order No.
8mm	120068

Roller Point

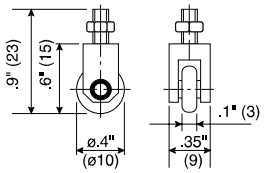

4-48UNF

Order No.
901991

M2.5 x 0.45mm

Order No.
901954

Extension Rod

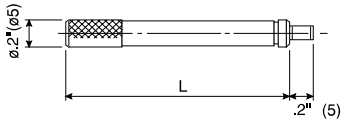

4-48UNF

L	Order No.
1/2"	139167
1"	301655
2"	301657
4"	301659

M2.5 x 0.45mm

L	Order No.
10mm	303611
20mm	303612
30mm	303613
100mm	303614

Point Conversion

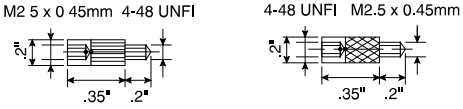

Order No.
21AAA011

Order No.
21AAA012

Lever Point

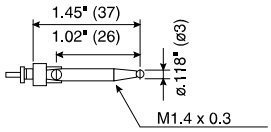

4-48UNF

Order No.
900393

M2.5 x 0.45mm

Order No.
900391

Interchangeable Contact Point Set (M2.5x0.45)

Set Order No. **7822**



Individual No.	Description
131365	Flat Point (ø5mm)
101117	Flat Point (ø10mm)
101121	Needle Point
101119	Spherical Point
101118	Shell Type Point
101387	Shell Type Point

Mitutoyo

Spindle Lifting Lever and Cable

Optional Accessories for Digimatic and Dial Indicators

Spindle Lifting Lever

- The Spindle Lifting Lever is attached to the top end of the spindle for improved inspection efficiency when using a dial indicator mounted on a stand.

Applicable S-Type Thickness and Depth Gages

Order No.	Description
21AZB149	Depth gages up to 12.7mm/.5"
21AZB150	Depth gages up to 25mm/1"
21AZB151	S-Type thickness gage



Dove Tail Type Lever Assembly

Order No.	Lever up to .5" / 12.7mm	Screw	Screw Thread
21EZA198	21AZB149	101171	M2.5
21EZA199	21AZB149	101047	4/48 UNF



ANSI Screw **101047**
JIS Screw **101171**

Spindle Lifting Cable

901975: with auto-stop function
540774: without auto-stop function
971753: With release-speed control
Lifting range: 1" / 25.4mm
Cable length: 300mm



Spindle Lifting Pick

137693
Applicable spindle diameter; 4.8mm



Use for Series 1 Dial Indicators (up 5mm / .25")

Set Order No.	Lever	Screw	Screw Thread
21BZA610	900527	101047	4-48 UNF
21BZA205	900527	101171	M2.5 x 0.45



Use for Series 2 Dial Indicators (up to 10mm/.4")

Set Order No.	Lever	Screw	Screw Thread
902794	900525	101047	4-48 UNF
902011	900525	101171	M2.5 x 0.45



Use for Series 2 Dial Indicators (up to 10mm/.4") and 1 Group S-Type

Set Order No.	Lever	Screw	Screw Thread
21BZA613	21BZA612	101047	4-48 UNF
902100	21BZA612	101171	M2.5 x 0.45



Use for Series 2 Dial Indicators (up to 20mm/.8")
and Series 3 and 4 Dial Indicators (up to 10mm/.4")

Set Order No.	Lever	Screw	Screw Thread
903425	903307	192753	4-48 UNF
903424	903307	192686	M2.5 x 0.45



Spindle Lifting Knob

Set Order No.	Range
21EZA197	For 1" range
21EZA200	For 2" range



Application

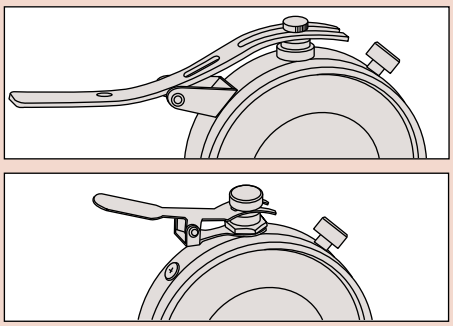

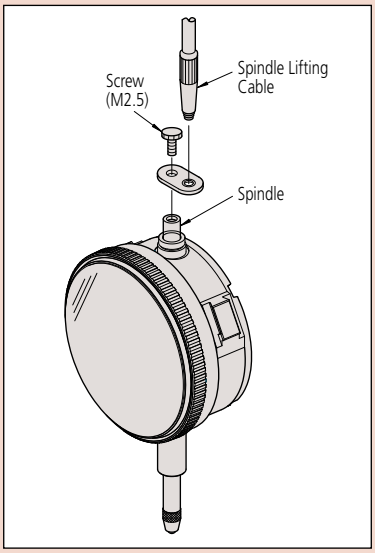

Color Spindle Caps

Optional Accessories for Digimatic and Dial Indicators

8 colors of spindle caps are available for dial indicators with a range of 10mm or less.

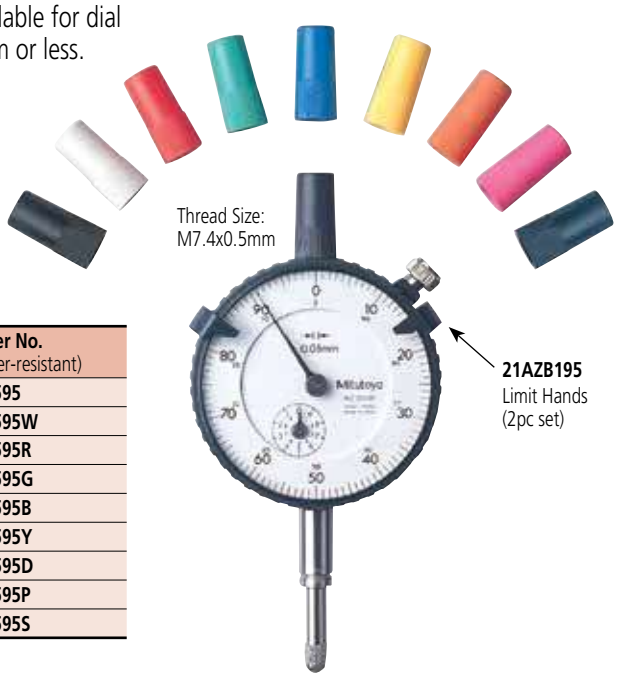

SPECIFICATIONS

Color	**Order No.** (normal)	**Order No.** (water-resistant)
Black	**193051**	**193595**
White	**193051W**	**193595W**
Red	**193051R**	**193595R**
Green	**193051G**	**193595G**
Blue	**193051B**	**193595B**
Yellow	**193051Y**	**193595Y**
Orange	**193051D**	**193595D**
Pink	**193051P**	**193595P**
Dark blue	**193051S**	**193595S**

Limit Stickers

Optional Accessories for Digimatic and Dial Indicators



FEATURES

- Stuck on the dial face or crystal of a Series 2 dial indicator (55.6mm or 57mm bezel dia.) to indicate tolerance limits.



136420: Red (10-sheet/set)



136421: Green (10-sheet/set)



136422: Yellow (10-sheet/set)

Dial Indicator Repair Tool Kit

Optional Accessories for Digimatic and Dial Indicators

Mitutoyo offers a tool set designed to let you perform simple repairs to your Mitutoyo dial indicator, as well as a device that lets you reset the indicator crystals.

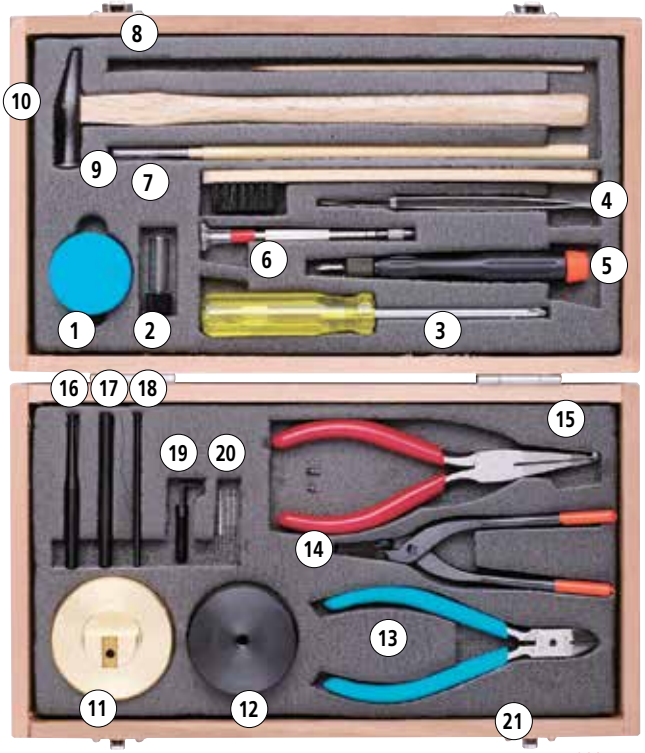

7823

SPECIFICATIONS

Order No.	Description
7823	Dial indicator repair tool kit

Order No. 7823

Set Configuration

(1)	**901171**:	Molykote (lubricant)
(2)	**21JAA313**:	Lubricating oil
(3)	**901173**:	Screwdriver (Phillips)
(4)	**901174**:	Screwdriver (Phillips/flat blade)
(5)	**129729**:	Tweezers
(6)	**901175**:	Pin-vise
(7)	**901176**:	Brush
(8)	**21JAA314**:	Stick
(9)	**901177**:	Brush
(10)	**901178**:	Hammer
(11)	**129730**:	Spindle rest
(12)	**129731**:	Pin rest
(13)	**901179**:	Nippers
(14)	**901180**:	Pliers
(15)	**901181**:	Hand remover
(16)	**129732**:	Pin remover
(17)	**129733**:	Punch
(18)	**129734**:	Bearing adjuster
(19)	**129735**:	Pinion rest
(20)	**129736**:	Reamer ø1
	193702:	Reamer ø0.6
	21JAA273:	Reamer ø0.5
(21)	**901182**:	Case

Optional Accessories For Hand Remover

126630:	Interchangeable Pin, 0.8mm DIA.
126630B:	Interchangeable Pin, 0.5mm DIA.
126630C:	Interchangeable Pin, 1.6mm DIA.

Dial Indicator Crystal Setter

Optional Accessories for Test and Dial Indicators

FEATURES

- Used for fitting a crystal on dial indicators, dial test indicators and dial calipers.



7000

With 8 sizes of crystal setting pads

SPECIFICATIONS

Order No.	Description
7000	Dial indicator crystal setter

Dial Test Indicators

SERIES 513

Description of Icon

Icon	Description
	With revolution counter
	Long contact point
	Jeweled bearing
	Double scale spacing, easy to read
	Compact
	Dustproof
	Anti-magnetic

FEATURES

- Narrow or deep places, which cannot be measured with a normal dial gage, can be easily and accurately measured.
- Proprietary new structure provides smooth pointer operation.
- Use of a hard frame body provides excellent rigidity and durability.
- Non-magnetic pointer and contact point permit secure operation even in environments with magnetism.
- Use of a clear and concise wide dial face allows excellent visibility.
- The surface of the crystal is hard-coated for scratch resistance.
- Flat crystal makes gradations easy to read. The unified structure of the outer frame prevents oil and water from permeating via the front face.
- Six types are available: vertical, inclined, perpendicular, horizontal, universal and pocketable, allowing users to select the model best suited to their needs.
- Vertical: Standard.
- Inclined: Dial face inclined 20°, compared with the vertical type, allows for easy reading.
- Perpendicular: Best suited for centering holes.
- Horizontal: The graduations can be read from the front, with the probe on the tip of the horizontal conical rod abutting the workpiece.
- Universal: The direction of the probe movement can be freely changed.
- Compact.
- Comes with certificate of inspection.



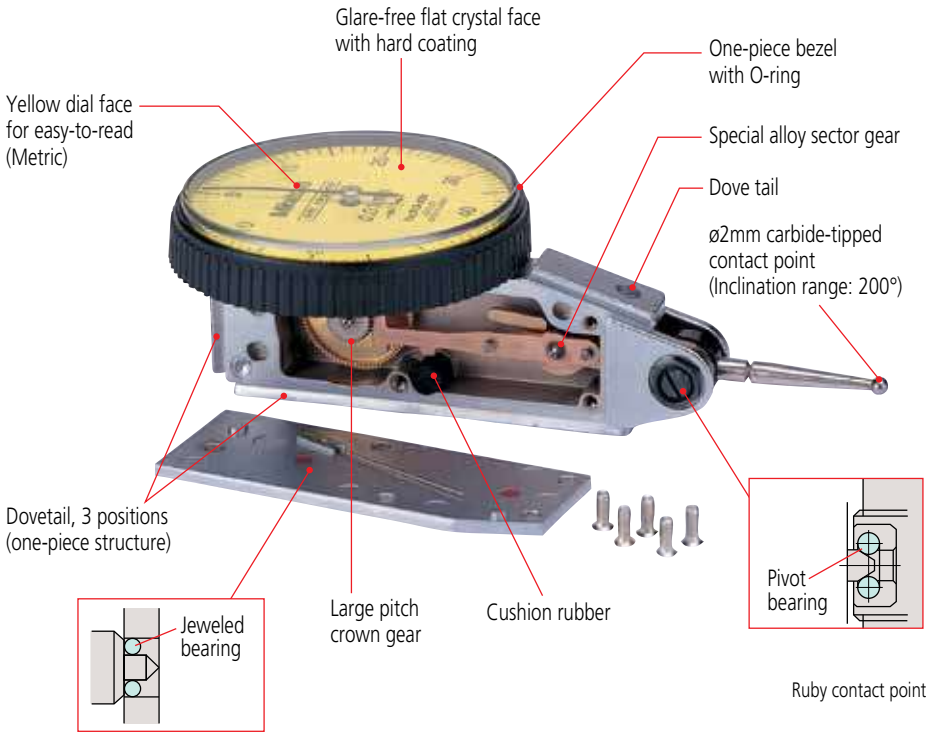

Mitutoyo

Dial Test Indicators

SERIES 513 — Horizontal Type

FEATURES

- Performs easy and accurate measurement of narrow or recessed areas, plus inside and outside diameters that dial indicators cannot access.
- No-clutch structure for automatic reversal of measuring direction.
- One-piece bezel and crystal design with O-ring provide resistance to water and dust.
- The glare-free flat crystal face has a scratch-resistant coating.
- High sensitivity and quick response because of jeweled bearings.
- Standard carbide contact point provide.



513-424E



513-404E



513-414E



513-403



513-424

Optional Accessories

———: Swivel clamp
———: Holding bar
———: Stem
———: Contact points

Special Set: No. 513-908 (mm)

513-404E: Dial test indicator
7014: Mini magnetic stand

No. 513-907 (inch)

513-402: Dial test indicator
7014E: Mini magnetic stand





DIMENSIONS AND MASS

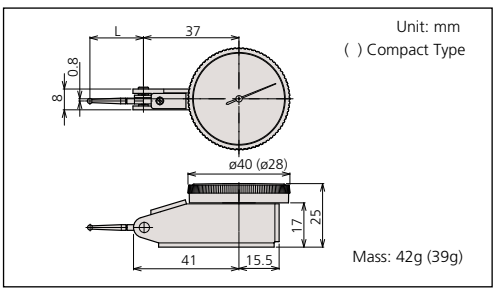

Set Configuration: Metric Test Indicators

Full set



Swivel clamp (**900321**, for ø4mm, ø8mm, dovetail)

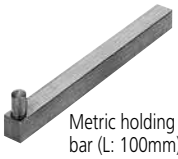

Metric holding bar (L: 100mm) (**900209**)



Contact point, ø1mm carbide



Contact point, ø3mm carbide



Stem, ø4mm (**190318**)

Basic set

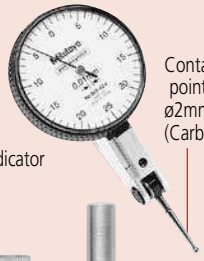

Contact point, ø2mm (Carbide)

Indicator



Knurled clamp ring

Stem, ø8mm

(Set No. **902804**)

Set Configuration: Inch Test Indicators

Full set



Contact point, .039" DIA. carbide



Contact point, .118" DIA. carbide



Stem, .157" DIA. (**190318**)



Swivel clamp (**900322**, for .157" DIA., 3/8" DIA., dovetail)

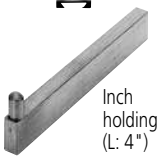

Inch holding bar (L: 4") (**900306**)

Basic set

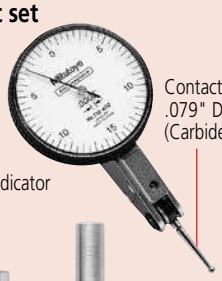

Contact point, .079" DIA. (Carbide)

Indicator



Knurled clamp ring

Stem, 3/8" DIA.

(Set No. **902805**)

Anti-magnet type

Double scale spacing type

Long contact point type

Jeweled bearing type

Compact type

With revolution counter type



513-466E



513-464E



513-463

SPECIFICATIONS

Metric

Graduation	Order No.		Range	Accuracy	Dial reading	Measuring force	L (mm)						
	Basic set	Full set											
0.01mm	**513-424E**	**513-424T**	0.5mm	5µm	0-25-0	0.3N or less	22.3	✔	✔	—	✔	—	—
0.01mm	**513-414E**	**513-414T**	0.5mm	10µm	0-25-0	0.2N or less	36.8	✔	✔	✔	✔	—	—
0.01mm	**513-466E**	—	0.5mm	5µm	0-25-0	0.3N or less	22.3	✔	✔	—	✔	✔	—
0.01mm	**513-478E***	—	0.5mm	5µm	0-25-0	0.3N or less	22.3	✔	—	—	✔	—	—
0.01mm	**513-404E**	**513-404T**	0.8mm	8µm	0-40-0	0.3N or less	20.9	✔	—	—	✔	—	—
0.01mm	**513-474E***	—	0.8mm	8µm	0-40-0	0.3N or less	20.9	✔	—	—	✔	—	—
0.01mm	**513-464E**	—	0.8mm	8µm	0-40-0	0.3N or less	20.9	✔	—	—	✔	✔	—
0.01mm	**513-415E**	**513-415T**	1mm	10µm	0-50-0	0.2N or less	44.5	✔	—	✔	✔	—	—
0.01mm	**513-426E**		1.5mm	8µm	0-25-0	0.4N or less	22.3	✔	✔	—	✔	—	✔
0.002mm	**513-405E**	**513-405T**	0.2mm	3µm	0-100-0	0.3N or less	14.7	✔	—	—	✔	—	—
0.002mm	**513-465E**	—	0.2mm	3µm	0-100-0	0.3N or less	14.7	✔	—	—	✔	✔	—
0.01mm	**513-475***	—	1mm	10µm	0-50-0	0.2N or Less	44.5	✔	—	—	✔	—	—
0.002mm	**513-425E**	—	0.6mm	6µm	0-100-0	0.4N or less	14.7	✔	—	—	✔	—	✔
0.001mm	**513-401E**	—	0.14mm	3µm	0-70-0	0.3N or less	12.8	✔	—	—	✔	—	—
0.01mm	**513-471E***	—	0.14mm	3µm	0-70-0	0.3N or less	12.8	✔	—	—	✔	—	—

*Provided with a ø2mm ruby contact point as a substitute for ø2mm carbide contact point.

Inch

Graduation	Order No.		Range	Accuracy	Dial reading	Measuring force	L (mm)						
	Basic set	Full set											
.0005"	**513-402**	**513-402T**	.03"	±.0005"	0-15-0	0.3N or less	19.9	✔	—	✔	—	—	—
.0005"	**513-472***	—	.03"	±.0005"	0-15-0	0.3N or less	19.9	✔	—	✔	—	—	—
.0005"	**513-412**	**513-412T**	.03"	±.0005"	0-15-0	0.2N or less	33.9	✔	✔	✔	—	—	—
.0005"	**513-462**	—	.03"	±.0005"	0-15-0	0.3N or less	19.9	✔	—	✔	✔	—	—
.0001"	**513-403**	**513-403T**	.008"	±.0001"	0-4-0	0.3N or less	15	✔	—	✔	—	—	—
.0001"	**513-473***	—	.008"	±.0001"	0-4-0	0.3N or less	15	✔	—	✔	—	—	—
.0001"	**513-463**	—	.008"	±.0001"	0-4-0	0.3N or less	15	✔	—	✔	✔	—	—

*Provided with a ø2mm ruby contact point as a substitute for ø2mm carbide contact point.

Metric/inch

Graduation	Order No.		Range	Accuracy	Dial reading	Measuring force	L (mm)						
	Basic set	Full set											
0.002mm, .0001"	**513-409**	**513-409T**	0.2mm, .0075"	3µm	0-10-0, 0-38-0	0.3N or less	14.7	✔	✔	—	—	—	—

Inch/Metric

Graduation	Order No.		Range	Accuracy	Dial reading	Measuring force	L (mm)						
	Basic set	Full set											
.0005", 0.01mm	**513-406**	**513-406T**	.03", 0.7mm	±.0005"	0-15-0, 0-35-0	0.3N or less	19.9	✔	✔	—	—	—	—

Mitutoyo

Dial Test Indicators

SERIES 513 — Horizontal (20° Tilted Face), Vertical and Parallel

FEATURES

- Specially designed for easy viewing of measurements.

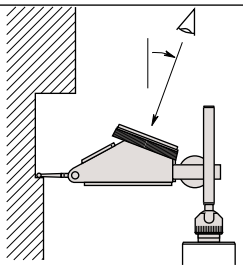

- The dial face points upward, allowing users to read the graduations from the user's side. It is convenient when measuring on the side of a large workpiece and the workbench is high.

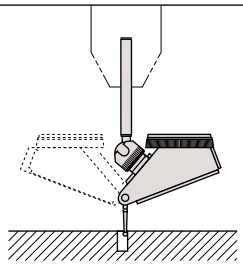

- Using the universal holder allows easy hole centering. The dial face always faces upward when the indicator is rotated for easy reading.



513-452



513-282G



513-444E



513-445E



513-284GE



513-442



513-446



513-444E



513-445E



513-454E
513-284GE



513-455E

Optional Accessories

———: Swivel clamp
———: Holding bar
———: Stem
———: Contact points

Set Configuration: Metric

Full set

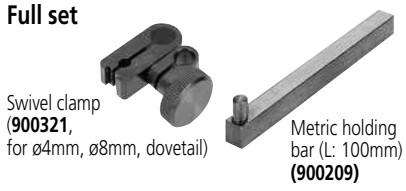

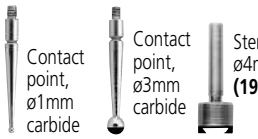

Basic set

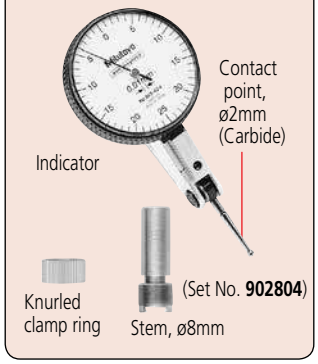

Set Configuration: Inch

Full set

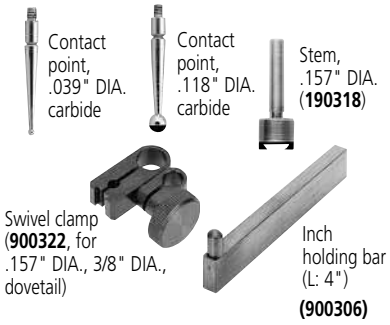

Basic set

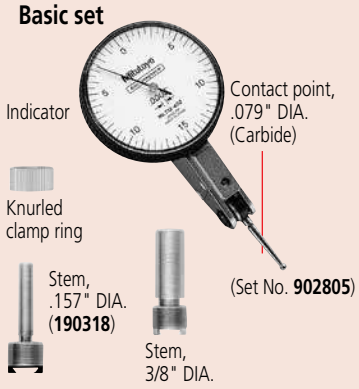

Basic set for 20° Tilted face type.
Also supplied .039" and .118"Contact points

Anti-magnet type | With revolution counter type | Jeweled bearing type | Long contact point type

SPECIFICATIONS

Metric Horizontal (20° tilted face) type

Graduation	Order No.		Range	Accuracy	Dial reading	Measuring force	Mass (g)	L (mm)			
	Basic set	Full set									
0.01mm	**513-444E**	**513-444T**	1.6mm	10µm	0-40-0	0.3N or less	48	20.9	✔	✔	✔
0.002mm	**513-445E**	**513-445T**	0.4mm	5µm	0-100-0	0.3N or less	48	14.7	✔	✔	✔

Inch Horizontal (20° tilted face) type

Graduation	Order No.		Range	Accuracy	Dial reading	Measuring force	Mass (g)	L (mm)					Remarks
	Basic set	Full set											
.0005"	**513-442**	**513-442T**	.06"	±.0005"	0-15-0	0.3N or less	48	19.9	✔	✔	✔	—	—
.0005"	**513-442-06**	**513-442T-06**	.06"	±.0005"	0-15-0	0.3N or less	48	19.9	✔	✔	✔	—	Black dial
.0005"	**513-446**	**513-446T**	.06"	±.0005"	0-15-0	0.2N or less	48	33.9	✔	✔	✔	✔	—
.0005"	**513-446-06**	**513-446T-06**	.06"	±.0005"	0-15-0	0.2N or less	48	33.9	✔	✔	✔	✔	Black dial
.0001"	**513-443**	**513-443T**	.016"	±.0002"	0-4-0	0.3N or less	48	15	✔	✔	✔	—	—
.0001"	**513-443-06**	**513-443T-06**	.016"	±.0002"	0-4-0	0.3N or less	48	15	✔	✔	✔	—	Black dial

Metric Vertical type

Graduation	Order No.		Range	Accuracy	Dial reading	Measuring force	Mass (g)	L (mm)		
	Basic set	Full set								
0.01mm	**513-454E**	**513-454T**	0.8mm	8µm	0-40-0	0.3N or less	50	20.9	✔	✔
0.002mm	**513-455E**	**513-455T**	0.2mm	3µm	0-100-0	0.3N or less	50	14.7	✔	✔

Inch Vertical type

Graduation	Order No.		Range	Accuracy	Dial reading	Measuring force	Mass (g)	L (mm)		
	Basic set	Full set								
.0005"	**513-452**	**513-452T**	.03"	±.0005"	0-15-0	0.3N or less	50	19.9	✔	✔
.0001"	**513-453**	**513-453T**	.008"	±.0001"	0-4-0	0.3N or less	50	15	✔	✔

Metric Parallel type

Graduation	Order No.		Range	Accuracy	Dial reading	Measuring force	Mass (g)	L (mm)	
	Basic set	Full set							
0.01mm	**513-284GE**	**513-284GT**	0.8mm	8µm	0-40-0	0.3N or less	68	20.9	✔

Inch Parallel type

Graduation	Order No.		Range	Accuracy	Dial reading	Measuring force	Mass (g)	L (mm)	
	Basic set	Full set							
.0005"	**513-282G**	**513-282GT**	.03"	±.0005"	0-15-0	0.3N or less	68	20	✔

DIMENSIONS

unit: mm

Horizontal (20° Tilted Face) Type

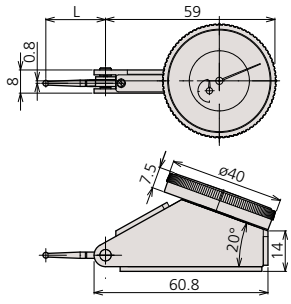

Vertical Type

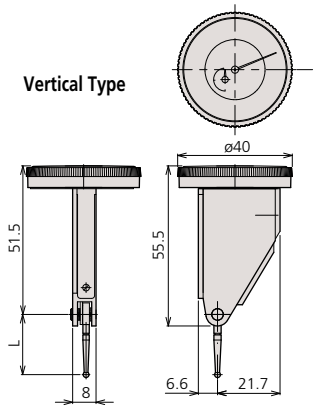

Parallel Type

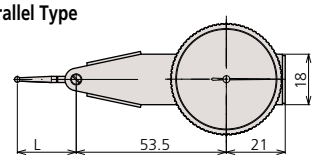

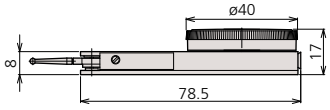

Mitutoyo

Pocket Dial Test Indicators

SERIES 513

FEATURES

- Jeweled bearings ensure high sensitivity and accuracy.
- Reversible measuring direction.
- Two holding bars are supplied. (Full sets only.)
- Fully adjustable bezel/dial face.
- Contact point is adjustable within 220°.
- Bezel is sealed with on O-ring to keep out water / oil.


513-517E


513-514E


513-527E


513-501E


513-515T


513-503E


513-518


513-504


513-528


513-512


513-514E


513-517E
513-527E


513-515T


513-503E


513-501E

Optional Accessories

———: Swivel clamp
———: Holding bar
———: Stem
———: Contact points

Set Configuration: Metric

Full set

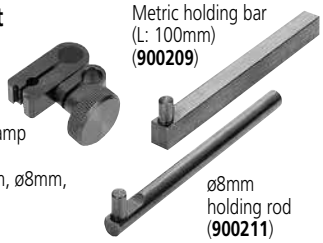



Basic set

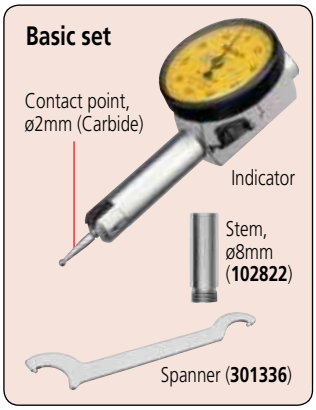

Set Configuration: Inch

Full set

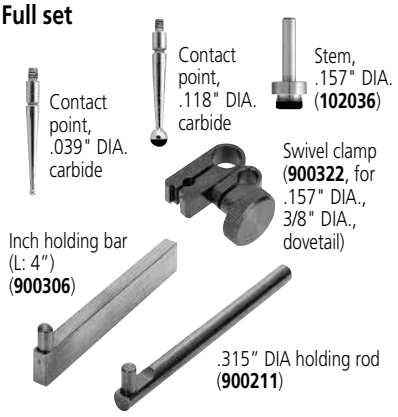

Basic set

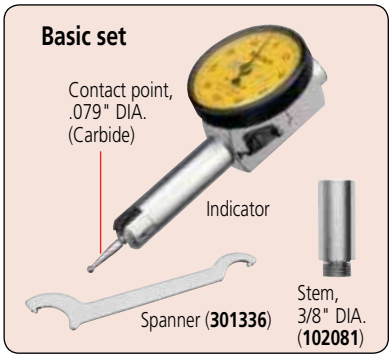

Long contact point type | Jeweled bearing type | Compact type

SPECIFICATIONS

Metric

Graduation	Order No.		Range	Accuracy	Dial reading	Measuring force	L (mm)			
	Basic set	Full set								
0.01mm	**513-514E**	**513-514T**	0.5mm	10µm	0-25-0	0.3N or less	36.8	✔	✔	—
0.01mm	**513-517E**	**513-517T**	0.8mm	8µm	0-40-0	0.3N or less	20.9	—	✔	—
0.01mm	**513-527E**	**513-527T**	0.8mm	8µm	0-40-0	0.3N or less	14.7	—	✔	✔
0.01mm	—	**513-515T**	1mm	10µm	0-50-0	0.3N or less	44.5	✔	✔	—
0.002mm	**513-503E**	**513-503T**	0.2mm	3µm	0-100-0	0.3N or less	14.7	—	✔	—
0.001mm	**513-501E**	**513-501T**	0.14mm	3µm	0-70-0	0.4N or less	12	—	✔	—

Inch

Graduation	Order No.		Range	Accuracy	Dial reading	Measuring force	L (mm)			
	Basic set	Full set								
.001"	**513-518**	**513-518T**	.04"	±.001"	0-20-0	0.3N or less	26.5	—	✔	—
.001"	**513-528**	**513-528T**	.04"	±.001"	0-20-0	0.3N or less	18.7	—	✔	✔
.0005"	**513-512**	**513-512T**	.02"	±.0005"	0-10-0	0.3N or less	37.4	✔	✔	—
.0001"	**513-504**	**513-504T**	.01"	±.0002"	0-5-0	0.3N or less	18.7	—	✔	—

Optional Contact Points

Pocket Type

Order No.		1mm	2mm	3mm	0.5mm	0.7mm
513-501E		136756	136104	136758	—	—
513-503E	**513-527E**	103017	103010	103018	190547	190548
513-504	**513-528**	131314	103011	131315	—	—
513-512		131316	131324	131317	—	—
513-514E		137746	129949	137747	—	—
513-515T		136235	136013	136236	190656	190655
513-517E		103013	103006	103014	190549	190550
513-518		103008	103007	103009	—	—

DIMENSIONS AND MASS

unit: mm

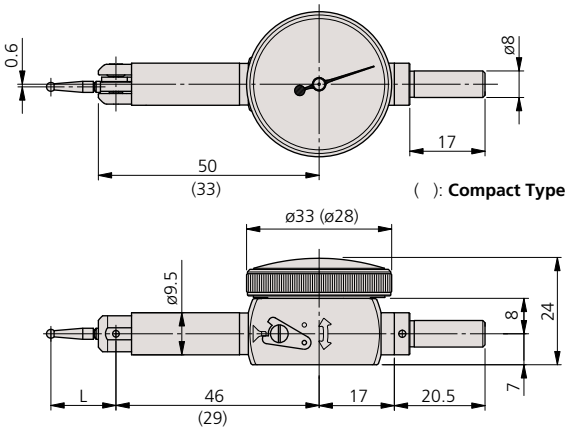

Mass: 45g (40g)
( ): Compact Type

Mitutoyo

Dial Test Indicators

SERIES 513 — Universal Type

FEATURES

- Universal application for all directions. Not only the direction of the measuring point, but also the direction of measurement itself can be adjusted 360 degrees without moving the indicator.

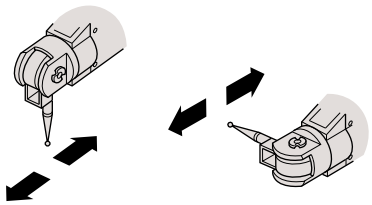



513-304GE

SPECIFICATIONS

Jeweled bearing type

Metric

Graduation	Order No.		Range	Accuracy	Dial reading	Measuring force	
	Basic set	Full set					
0.01mm	**513-304GE**	**513-304GT**	0.8mm	8μm	0-40-0	0.3N or less	✔

Inch

Graduation	Order No.		Range	Accuracy	Dial reading	Measuring force	
	Basic set	Full set					
.0005"	**513-302G**	**513-302GT**	.03"	±.0005"	0-15-0	0.3N or less	✔

DIMENSIONS AND MASS

Unit: mm

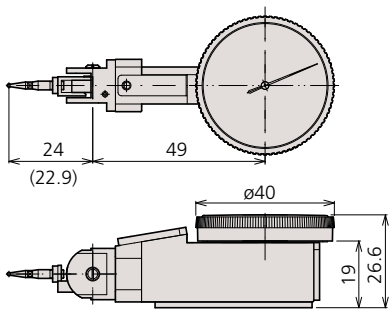

Mass: 80g
( ): 513-302G

Set Configuration: Metric

Full set

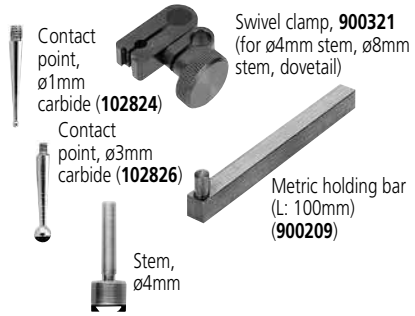

Basic set

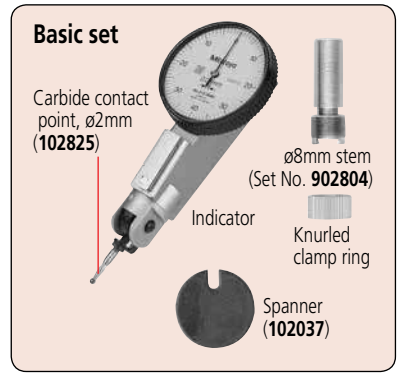

Set Configuration: Inch

Full set

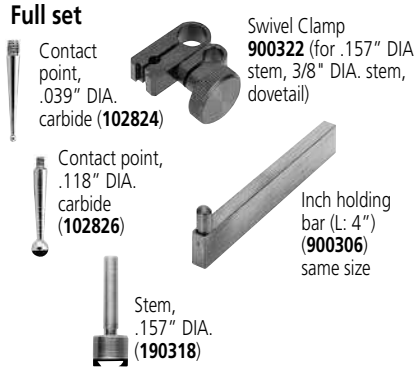

Basic set

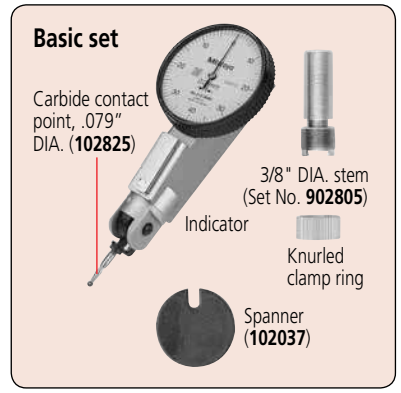

Optional Accessories

———: Swivel clamp
———: Holding bar
———: Stem

Contact Points and Clamp Holders

Optional Accessories for Dial Test Indicator

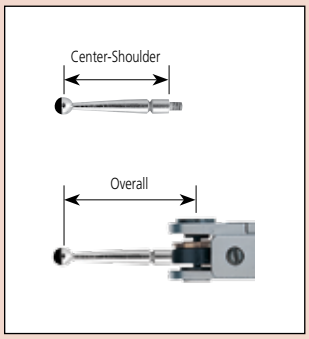

Inch

Length (mm)		Part No.								
Center-Shoulder	Overall	ø0.5	ø0.7	ø1	ø2	ø3	Ruby Ø2mm	Test Indicator Code No.		
11.5	15.0	—	—	136076	136075	136077	21CZA213	**513-403** **513-453**	**513-443** **513-463**	**513-473**[*3] **513-443-06**
16.4	19.9	—	—	133196	133195	133197	21CZA204	**513-402** **513-406** **513-452**	**513-442** **513-462**	**513-472**[*3] **513-442-06** **513-282G**
30.4	33.9	—	—	136291	136290	136292	21CZA214	**513-412** **513-446-06**	**513-446**	
15.2	18.7	—	—	131314	103011	131315	—	**513-504**[*1]	**513-528**[*1]	
23.0	26.5	—	—	103008	103007	103009	—	**513-518**[*1]		
33.9	37.4	—	—	131316	131324	131317	—	**513-512**[*1]		

Metric

Length (mm)		Part No.								
9.4	12.9	—	—	21CZA044	21CZA036	21CZA045	21CZA212	**513-401E**	**513-471E**[*3]	
11.2	14.7	190547	190548	103017	103010	103018	21CZA209	**513-405E** **513-503E**[*1] **513-527E**[*1]	**513-425E** **513-455E** **513-475E**[*3]	**513-445E**
17.4	20.9	190549	190550	103013	103006	103014	21CZA201	**513-404E** **513-464E** **513-284GE**	**513-444E** **513-517E**[*1]	**513-454E** **513-474E**[*3]
18.7	22.2	190654	190653	137558	137557	137559	21CZA210	**513-424E** **513-478**[*3]	**513-426E**	**513-466E**
41.0	44.5	190656	190655	136235	136013	136236	21CZA211	**513-415E**	**513-515T**[*1]	
33.3	36.8	—	—	137746	129949	137747	—	**513-414E**	**513-514E**[*1]	
8.6	12.0	—	—	136756	136104	136758	—	**513-501E**[*1]		
6.5	24.0	—	—	102824	102825	102826	—	**513-304GE**[*2]	**513-302G**[*2]	

*1 Denotes Pocket Indicators
*2 Denotes Universal Indicator
*3 Indicator Ships with Ruby Contact

Holding Bars (with 6mm mounting pin)



9 x 9mm

953638 (Length: 50mm)
900209 (Length: 100mm)



900211 (Length: 115mm)

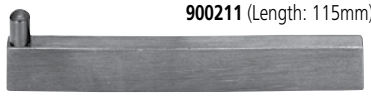

.25" x .5"
ø8mm

953639 (Length: 2")
900306 (Length: 4")



Spanner (**102037**)

Universal Holder

- Allows the indicator to be set at a desired position.



21CZA233 (ø8mm stem, Length: 80mm)
21CZA231 (.25" DIA. stem, Length: 3")
21CZA229 (ø6mm stem, Length: 80mm)

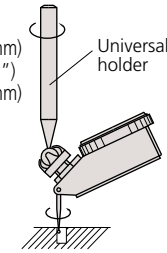

Centering Holder

- Allows large diameter cylinders or holes to be centered.



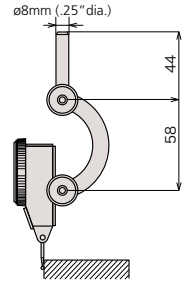

901959 (ø8mm stem)
901997 (.25" DIA. stem)

Universal Holder (pocket type)

- Since the Dial Test Indicator can be swiveled to a desired angle, the holder is useful for centering workpieces and installing workpieces on a milling machine.



21CZA234 (ø8mm stem, Length: 84mm)
21CZA232 (.25" DIA. stem, Length: 84mm)
21CZA230 (ø6mm stem, Length: 84mm)

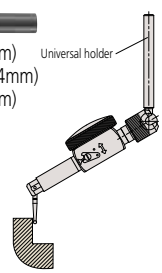

Mitutoyo

i-Checker

SERIES 170 – Inspection Instrument for Dial Indicator

The i-Checker is specially designed to calibrate dial indicators, dial test indicators, and other electronic comparison gage heads with a stroke of up to 100mm (4").

- ±(0.2+L/100)µm indication accuracy.
- Directly inspects an indicator with a stroke of up to 100mm (4"). The dial test indicator, bore gage and lever-type inductive head can be inspected with optional accessories.
- Adjustment of the measurement position is easily accomplished due to semi-automatic measurement and fully automatic measurement functions.
- Creates and prints out a simple inspection certificate.
- Saves inspection results as a CSV file for analysis by software.





SPECIFICATIONS

Order No.	Remarks
170-321A*	with ø8mm bushing
170-322A*	with ø3/8" bushing

* PC is required and must be purchased separately.

DIMENSIONS

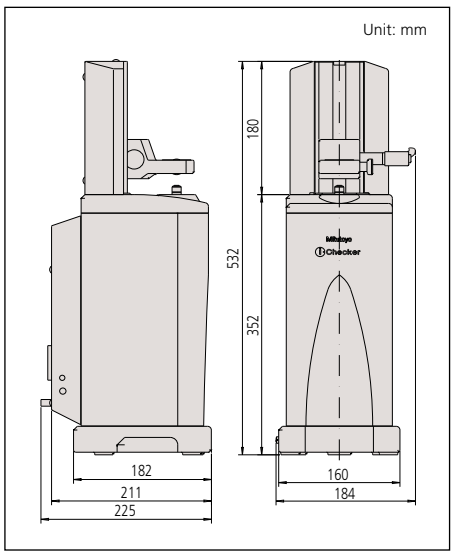

Applicable Indicators

- Dial indicator
- Hicator
- Digimatic indicator***
- Test indicator*
- Bore gage**
- Linear gage

* Requires optional test indicator attachment set.
* Contact the nearest Mitutoyo sales office for testable indicators.
** Requires optional bore gage accessory.
*** Requires optional SPC cable for fully automatic measurement.



Using test indicator attachment set (**02ASK000**)

Technical Data

Measuring Range:	100mm/4"
Resolution:	0.02µm/0.8µin
Accuracy:	±(0.2+L/100)µm in vertical position
(at 20°C)	±(0.3+2L/100)µm in lateral position
	L = measuring length (mm)
Drive method:	Electric motor
Measuring Unit:	Reflective-type glass linear encoder
Thermal expansion coefficient:	(8±1)X10^{-6}/K
Measurement method:	Semi-automatic / Fully automatic*
Dimensions:	184 x 225 x 532mm (W x D x H)
Operating temperature range:	20°C±3°C
Power supply:	100VAC to 240VAC ±10%, 50/60Hz
Mass:	20kg/44.1lbs

* Automatic measurement requires the indicator's connection cable. Additionally, some form of indicator, along with a connecting machine (the optional accessory for indicator as a Digimatic power-supply unit on EF counter), will be needed.

Functions

Semi-automatic inspection of analog indicator

The pointer of the analog indicator is positioned just before the measuring point automatically via Mitutoyo's Semi-automatic Measurement function. After that, inspection begins simply by adjusting the pointer position with the jog-dial. Because of this function, measurement time is reduced and user fatigue is practically eliminated. Additionally all functions necessary for inspection are combined in the control box so that the operator need not rely on excessive eye movement to adjust the pointer.



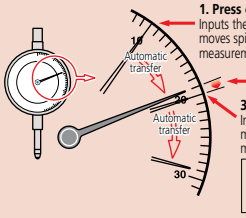

1. Press of data button
Inputs the current position data and moves spindle just before the next measurement position automatically.

2. Positioning by Jog-dial

3. Press of data button
Inputs the current position data and moves spindle just before the next measurement position automatically.

Note: It is possible to specify the scale graduation increment so that spindle movement and data transfer are performed automatically.

Fully automatic inspection of digital indicator

The Automatic Measurement function, in tandem with a digital indicator, makes the spindle move so that measurement data is acquired automatically. Therefore, manual adjustment to the measurement position is unnecessary and the efficiency of every inspection is enhanced.



Create and printout a simplified inspection certificate

Create, edit and print your own inspection certificate. Data can be saved as a CSV file.

Optional Accessories

02ASK000: Test indicator attachment set (ø6mm stem)
02ASK180: Test indicator attachment set (ø8mm stem)
02ASK370: Test indicator holder (ø6mm stem)
02ASK380: Test indicator holder (ø8mm stem)
02ASK110: Accessory set for short-leg and digimatic bore gages
02ASL310: Accessory for bore gages
902803: ø6mm dovetail grooved stem
902804: ø8mm dovetail grooved stem
02ASK040: Stem bush ø6mm
02ASJ856: Stem bush ø8mm
02ASK150: Stem bush ø8mm, short
02ASL150: Stem bush ø10, short
02ASK050: Bush ø9.5 (Requires **02ASK070**)
02ASK060: Stem bush ø12mm
02ASK070: Stem bush ø15mm
02ASK080: Stem bush ø20mm
02ASK710: Stem bush ø28mm
02ASK090: Stem bush 3/8"
02ASK130: Stem bush case
02ASK730: Reflector
937179T: Foot switch

UDT-2 Dial Gage Testers

SERIES 170

The UDT-2 Dial Gage Tester consists of a specially designed 0-1″ / 0-25mm micrometer head, with a large disc, and rigid holding fixtures. Gage tester to calibrate measuring accuracy of dial indicators, dial test indicators and dial bore gage.



170-102-10

FEATURES

- Clamping stem diameter—
  170-102-10: 6mm and 8mm,
  170-101-10: .25" and .375"
- With the optional stand (**12AAK824**), inspection of dial bore gages becomes possible.

Optional Accessory

12AKK824: Stand for bore gage inspection



SPECIFICATIONS

Metric

Range	Order No.	Graduation	Accuracy
0 - 25mm	**170-102-10**	0.001mm	±1μm

Inch

Range	Order No.	Graduation	Accuracy
0 - 1"	**170-101-10**	.0001″	±.0001″

Calibration Testers

SERIES 521

The Calibration Tester is specially designed to calibrate measuring accuracy of short-range dial indicators, dial test indicators, and other electronic comparison gage heads.



521-103

FEATURES

- Universal bracket accepts any dial indicator, dial test indicator, and lever head of Mu-Checker without any additional accessory.
- Clamping capacity: ø4mm - ø10mm / .157″-.394″ dia.
- Dual color-indexed directional graduations to facilitate measurements.



Calibrating test indicator

SPECIFICATIONS

Metric

Range	Order No.	Graduation	Accuracy
0 - 1mm	**521-103**	0.0002mm	±0.2μm
0 - 5mm	**521-105**	0.0002mm	±0.8μm

Inch

Range	Order No.	Graduation	Accuracy
0 - .05"	**521-104**	.00001″	±.00001″
0 - .2"	**521-106**	.00001″	±.00003″

Thickness Gages

SERIES 547, 7

Thickness Gages offer a quick and efficient means of inspection with a convenient grip handle, thumb trigger and spring-loaded spindle. The various models cover a range of applications.

FEATURES

- Wide range of applications with various types of measuring faces (on the spindle and anvil).
- Digital models incorporate Mitutoyo's popular ID-C and ID-S Series Digimatic Indicators to provide error-free LCD readings, as well as data output for SPC analysis.
- **547-400S** is ideally suited for measuring thicknesses of paper, film, wire, sheet metal and similar materials.

Flat-Anvil Type

Standard Type / Digital



547-300S

Deep-Throat Type / Digital



547-320S

Deep-Throat Type / Dial



7321

High-Accuracy Type / Digital



547-400S

DIMENSIONS

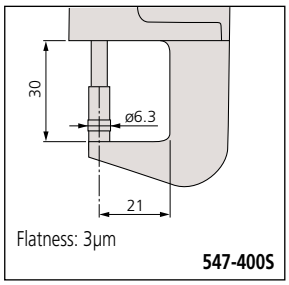

Flatness: 3µm

547-400S

Technical Data
Function of Digital Models

IDS Types
- ON/OFF
- Inch / mm Conversion
- Origin
- ±Direction Changeover
- SPC Output
- Battery Life: 20,000 hrs
- Power Supply: Silver Oxide Cell (SR-44 1pc.)

IDC Types
- ON/OFF
- Inch / mm Conversion
- Zero / ABS
- ±Direction Changeover
- SPC Output
- Battery Life: 5,000 hrs
- Power Supply: Silver Oxide Cell (SR-44 1pc.)
- Preset
- Provides go/no-go judgment
- Face Rotates 330°

DIMENSIONS

Unit: mm

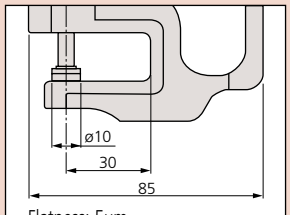

Flatness: 5µm

7301, 7305, 547-300S

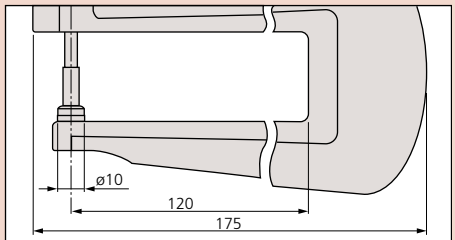

Flatness: 5µm

7321, 7323, 547-320S

Thickness Gages

SERIES 547, 7

Flat Anvil

Optional Accessories

905338: SPC cable (40" / 1m) for digital type
905409: SPC cable (80" / 2m) for digital type
902794: Spindle lifting lever for IDS digimatic type (stroke .5" / 12.7mm)

Standard Accessories

21AZB149: Spindle lifting lever for digimatic and dial thickness gage (stroke .5" / 12.7mm)
21AZB150: Spindle lifting lever for dial indicator (stroke 1" / 25.4mm)

SPECIFICATIONS

Inch/Metric Digital Type

Range	Order No.	Resolution	Accuracy	Measuring Force	Indicator	Spindle/Anvil Material
0 - .47" / 0 - 12mm	**547-500S**	.0005"/0.01mm	±.001"	1.5N or less	Digimatic IDS	Ceramic
0 - .47" / 0 - 12mm	**547-520S**	.0005"/0.01mm	±.001"	1.5N or less	Digimatic IDS	Ceramic
0 - .47" / 0 - 12mm	**547-526S**	.0001"/0.001mm	±.0002"	1.5N or less	Digimatic IDS	Ceramic
0 - .4" / 0 - 10mm	**547-300S**	.0005"/0.01mm	±.001"	1.5N or less	Digimatic IDC	Ceramic
0 - .4" / 0 - 10mm	**547-320S**	.0005"/0.01mm	±.001"	1.5N or less	Digimatic IDC	Ceramic
0 - .47" / 0 - 12mm	**547-400S**	.00005"/0.001mm	±.00015"	3.5N or less	Digimatic IDC	Carbide

Inch Dial Type

Range	Order No.	Graduation	Accuracy	Measuring Force	Remarks
0 - .05"	**7326S**	.0001"	±.0002"	1.4N or less	Fine dial reading, ceramic spindle/anvil
0 - .5"	**7300S**	.001"	±.001"	1.4N or less	Standard, ceramic spindle/anvil
0 - 1"	**7304S**	.001"	±.002"	2.0N or less	Standard, ceramic spindle/anvil
0 - 1"	**7322S**	.001"	±.002"	2.0N or less	Deep throat, ceramic spindle/anvil

Metric Dial Type

Range	Order No.	Graduation	Accuracy	Measuring Force	Remarks
0 - 1mm	**7327**	0.001mm	±5µm	1.4N or less	Fine dial reading, ceramic spindle/anvil
0 - 10mm	**7301**	0.01mm	±15µm	1.4N or less	Standard, ceramic spindle/anvil
0 - 20mm	**7305**	0.01mm	±20µm	2.0N or less	Standard, ceramic spindle/anvil
0 - 10mm	**7321**	0.01mm	±15µm	1.4N or less	Deep throat, ceramic spindle/anvil
0 - 20mm	**7323**	0.01mm	±22µm	2.0N or less	Deep throat, ceramic spindle/anvil

DIMENSIONS

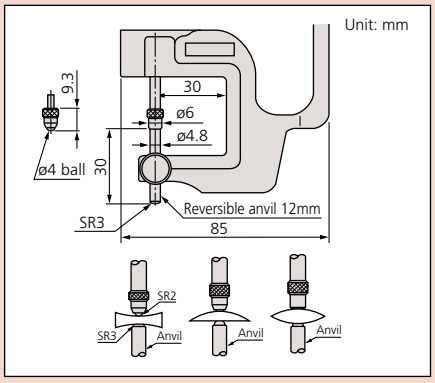

Lens thickness measurement (reverse anvil)





SPECIFICATIONS

Inch/Metric Digital Type

Range	Order No.	Resolution	Accuracy	Measuring Force	Indicator
0 - .47" / 0 - 12mm	**547-512S**	.0005"/0.01mm	±.001"	1.5N or less	Digimatic IDS
0 - .4" / 0 - 10mm	**547-312S**	.0005"/0.01mm	±.001"	1.5N or less	Digimatic IDC

Inch Dial Type

Range	Order No.	Graduation	Accuracy	Measuring Force	Remarks
0 - .5"	**7312S**	.001"	±.001"	1.4N or less	Lens thickness

Metric Dial Type

Range	Order No.	Graduation	Accuracy	Measuring Force	Remarks
0 - 10mm	**7313**	0.01mm	±15µm	1.4N or less	Lens thickness

Thickness Gages

SERIES 547, 7

Tube thickness measurement



547-361S



7360

SPECIFICATIONS

Inch/Metric Digital Type

Range	Order No.	Resolution	Accuracy	Measuring Force	Indicator
0 - .47" / 0 - 12mm	**547-561S**	.0005"/0.01mm	±.001"	1.5N or less	Digimatic IDS
0 - .4" / 0 - 12mm	**547-361S**	.0005"/0.01mm	±.001"	1.5N or less	Digimatic IDC

Inch Dial Type

Range	Order No.	Graduation	Accuracy	Measuring Force	Remarks
0 - .5"	**7361S**	.001"	±.001"	1.4N or less	Tube thickness

Metric Dial Type

Range	Order No.	Graduation	Accuracy	Measuring Force	Remarks
0 - 10mm	**7360**	0.01mm	±15µm	1.4N or less	Tube thickness

DIMENSIONS

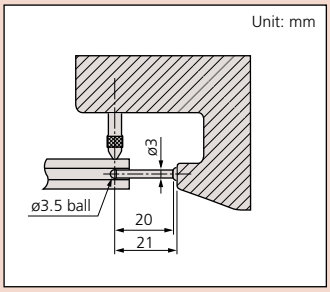

Optional Accessories

905338: SPC cable (40" / 1m) for digital type
905409: SPC cable (80" / 2m) for digital type
902794: Spindle lifting lever for IDS digimatic type (stroke .5" / 12.7mm)

Standard Accessories

21AZB149: Spindle lifting lever for digimatic and dial thickness gage (stroke .5" / 12.7mm)
21AZB150: Spindle lifting lever for dial indicator (stroke 1" / 25.4mm)

Groove thickness measurement (Blade anvil)



547-316S



7315

SPECIFICATIONS

Inch/Metric Digital Type

Range	Order No.	Resolution	Accuracy	Measuring Force	Indicator
0 - .47" / 0 - 12mm	**547-516S**	.0005"/0.01mm	±.001"	1.5N or less	Digimatic IDS
0 - .47" / 0 - 10mm	**547-316S**	.0005"/0.01mm	±.001"	1.5N or less	Digimatic IDC

Inch Dial Type

Range	Order No.	Graduation	Accuracy	Measuring Force	Remarks
0 - .5"	**7316S**	.001"	±.001"	1.4N or less	Groove thickness

Metric Dial Type

Range	Order No.	Graduation	Accuracy	Measuring Force	Remarks
0 - 10mm	**7315**	0.01mm	±15µm	1.4N or less	Groove thickness

DIMENSIONS

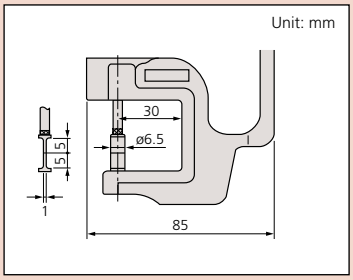

Quick-Mini

SERIES 700

A compact comparator designed for carrying convenience is suited for quick inspection of paper thickness, leather, wires, plastic parts, etc. The digital display provides error-free reading with 0.01mm / .0005" resolution.

FEATURES

- Measuring force less than 2N.
- Supplied in fitted plastic case.



700-118-20

Technical Data

Accuracy: Refer to the list of specifications.
Resolution: 0.01mm or .0005"/0.01mm
Display: LCD
Battery: SR44 (1 pc.), **938882**
Battery life: Approx. 2 years under normal use

Function

Zero-setting, Data hold, Power ON/OFF, inch/mm conversion (on inch/metric models only)



SPECIFICATIONS

Metric

Range	Order No.	Accuracy
0 - 12mm	**700-119-20**	±0.02mm

Inch/Metric

Range	Order No.	Accuracy
0 - .5"/0 - 12.7mm	**700-118-20**	±.001"

DIMENSIONS AND MASS

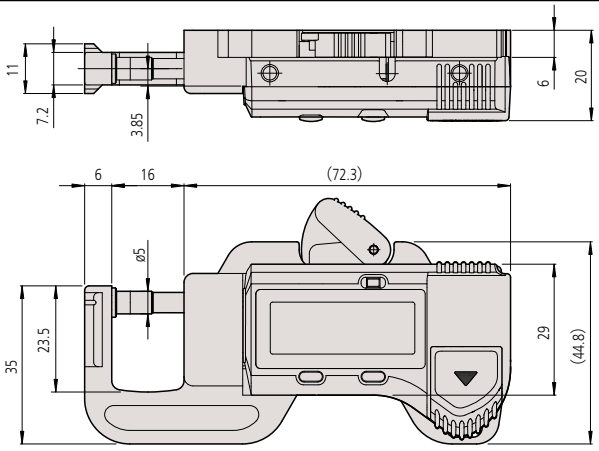

Unit: mm

700-118-20 / 700-119-20
MASS: 70g

Mitutoyo

Digimatic Caliper Gages

SERIES 209 — Internal Tube Thickness Measurement

Versatile ID measuring gages for hole diameters, groove thickness, tube diameter and hard-to-reach dimensions. The Digimatic Caliper Gages provide error-free LCD readings, as well as data output for SPC analysis.

Internal measurement type

209-552

IP67



Technical Data

Accuracy:	Refer to the list of specifications
Resolution:	.001", .0005", or .0002" 0.01mm, 0.02mm, or 0.005mm
Display:	LCD Analog / Digital
Power Supply:	AAA Battery (2 pcs.)
Battery life:	Approx. 350 hours
Measuring Force:	0.9 - 1.8N
Dust/Water protection level:	IP67

Provided with inspection certificate.

Function

Zeroset, Preset, Auto power off, Inch/Metric, conversion Data hold, Max/Min value holding, Data output

Optional Accessories

KPL1961-09: SPC Adapter
937387 Digimatic cable (1m)
965013 Digimatic cable (2m)
KPL8004-50 Holder for stand

SPECIFICATIONS

Inch / Metric

Range	Order No.	Resolution	Accuracy	Max. Measuring Depth L	Max. Groove Depth A	Min. Groove Width B	Type of Measuring Contact	Mass(g)
.10 -.49"/ 2.5 -12.5mm	**209-550**	.0002"/ 0.005mm	.0008"/ 0.015mm	.47"/ 12mm	.027"/0.7mm	.023"/ 0.5mm	Chisel R .0039"/ 0.1mm	225
.20 -.59"/ 5 -15mm	**209-551**	.0002"/ 0.005mm	.0008"/ 0.015mm	1.37"/ 35mm	.09"/ 2.3mm	.032"/ 0.8mm	Ball .024"/ 0.6mm dia.	230
.39 -1.18"/ 10-30mm	**209-552**	.0005"/ 0.01mm	.0015"/ 0.03mm	3.3"/ 85mm	.19"/ 5.2mm	.06"/ 1.2mm	Ball .04"/ 1mm dia.	250
.79 -1.58"/ 20-40mm	**209-553**	.0005"/ 0.01mm	.0015"/ 0.03mm	3.3"/ 85mm	.26"/ 7mm	.06"/ 1.2mm	Ball .04"/ 1mm dia.	250
1.18 -1.97"/ 30-50mm	**209-554**	.0005"/ 0.01mm	.0015"/ 0.03mm	3.3"/ 85mm	.26"/ 7mm	.06"/ 1.2mm	Ball .04"/ 1mm dia.	255
1.58 -2.36"/ 40-60mm	**209-555**	.0005"/ 0.01mm	.0015"/ 0.03mm	3.3"/ 85mm	.31"/ 8.3mm	.06"/ 1.2mm	Ball .04"/ 1mm dia.	265
1.97 -2.75"/ 50-70mm	**209-556**	.0005"/ 0.01mm	.0015"/ 0.03mm	3.3"/ 85mm	.31"/ 8.3mm	.06"/ 1.2mm	Ball .04"/ 1mm dia.	265
2.36 -3.15"/ 60-80mm	**209-557**	.0005"/ 0.01mm	.0015"/ 0.03mm	3.3"/ 85mm	.31"/ 8.3mm	.06"/ 1.2mm	Ball .04"/ 1mm dia.	270
2.75 - 3.54"/ 70-90mm	**209-558**	.0005"/ 0.01mm	.0015"/ 0.03mm	3.3"/ 85mm	.31"/ 8.3mm	.06"/ 1.2mm	Ball .04"/ 1mm dia.	270
0.51 - 1.69"/13-43mm	**209-904**	.001"/0.02mm	.002"/0.04mm	5.0"/127mm	.177"/4.5mm	.079"/2.0mm	Ball Ø.05"/1.3mm	360
1.18 - 2.36"/ 30-60mm	**209-906**	.001"/0.02mm	.002"/0.04mm	5.2"/132mm	.256"/6.5mm	.098"/2.5mm	Ball Ø.06"/1.5mm	370
1.97 - 3.15"/ 50-80mm	**209-907**	.001"/0.02mm	.002"/0.04mm	5.2"/132mm	.335"/8.5mm	.098"/2.5mm	Ball Ø.08"/2mm	370
2.76 - 3.94"/ 70-100mm	**209-908**	.001"/0.02mm	.002"/0.04mm	5.2"/132mm	.335"/8.5mm	.098"/2.5mm	Ball Ø.08"/2mm	375
3.54 - 4.72"/ 90-120mm	**209-909**	.001"/0.02mm	.002"/0.04mm	5.2"/132mm	.335"/8.5mm	.098"/2.5mm	Ball Ø.08"/2mm	380
0.59 - 2.56"/ 15-65mm	**209-905**	.001"/0.02mm	.0024"/0.06mm	7.4"/188mm	.196"/5mm	.087"/2.2mm	Ball Ø.06"/1.5mm	415
1.57 - 3.54"/ 40-90mm	**209-910**	.001"/0.02mm	.0024"/0.06mm	7.56"/192mm	.315"/8mm	.098"/2.5mm	Ball Ø.08"/2mm	420

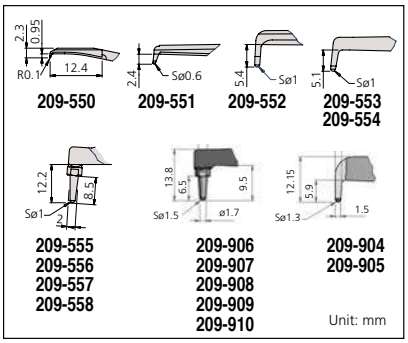

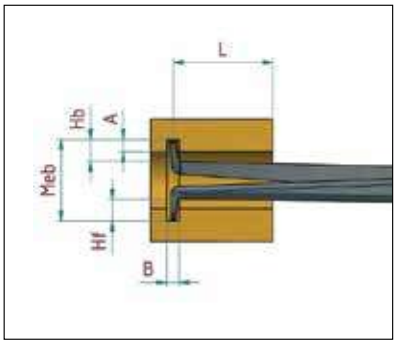

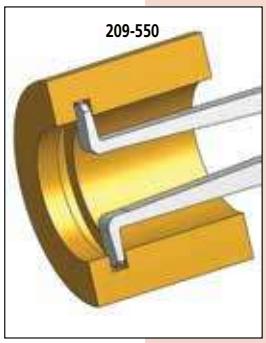

Edge R 0.1 mm

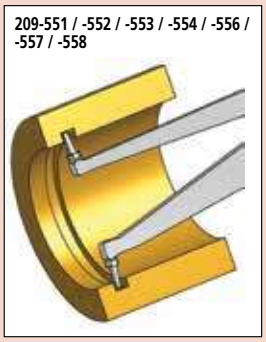

Ball ø 0.6mm, ø 1mm, ø 1.3mm
ø 1.5mm and ø 2mm

Digimatic Caliper Gages

SERIES 209 — External Tube Thickness Measurement

Versatile OD measuring gages for groove thickness, tube thickness and hard-to-reach dimensions. Digimatic Caliper Gages provide error-free LCD readings, as well as data output for SPC analysis.

External measurement type

209-572

IP67



Technical Data

Accuracy:	Refer to the list of specifications
Resolution:	.001", .0005", or .0002" 0.01mm, 0.02mm, or 0.005mm
Display:	Analog / Digital
Power Supply:	AAA Battery (2 pcs.)
Battery life:	Approx. 350 hours
Measuring Force:	0.8 - 1.7N
Dust/Water protection level:	IP67
Provided with inspection certificate.	

Function

Zeroset, Preset, Auto power off, Inch/Metric conversion, Data hold, Max/Min value holding, Data output
* Contact type 3, 4 does not have max. min. value hold.

SPECIFICATIONS

Inch / Metric

Range	Order No.	Resolution	Accuracy	Max. Measuring Depth L	Measuring Contact length Hb	Measuring Contact length Hf	Type of Measuring Contact/type of set up	Mass(g)
0 - .39"/ 0-10mm	**209-570**	.0002"/0.005mm	.0008"/ 0.05mm	1.37"/35mm	.75" /19.1mm	.73"/ 18.6mm	Ball .059"/1.5mm dia. Both/ A	240
0 - .39"/ 0-10mm	**209-571**	.0002"/0.005mm	.001"/ 0.02mm	1.37"/35mm	.85"/21.7mm	.58"/ 14.8mm	Desc .24"/ 6mm dia. Both/ C	175
0 - .78"/ 0-20mm	**209-572**	.0005"/0.01mm	.0015"/ 0.03mm	3.2"/85mm	.97"/24.7mm	.97"/ 24.6mm	Ball .059"/1.5mm dia. Both/ A	280
0 - .78"/ 0-20mm	**209-573**	.0005"/0.01mm	.0015"/ 0.03mm	3.2"/80mm	.97"/24.7mm	.10"/ 2.5mm	Ball .059"/1.5mm dia. Both/ B	270
0-1.18"/0-30mm	**209-913**	.001"/0.02mm	.002"/0.04mm	4.5"/114mm	1.17"/30mm	1.17"/30mm	Ball Ø.12"/3mm A	430
0-1.18"/0-30mm	**209-914**	.001"/0.02mm	.002"/0.04mm	4.58"/116mm	1.17"/30mm	.16"/4mm	Ball Ø.12"/3mm B	410
0-1.18"/0-30mm	**209-915**	.001"/0.02mm	.002"/0.04mm	4.56"/116mm	1.42"/36mm	.94"/24mm	Disc Ø1.97"/50mm D	430
0-1.97"/0-50mm	**209-918**	.001"/0.02mm	.002"/0.04mm	6.57"/167mm	1.17"/30mm	1.17"/30mm	Ball Ø.12"/3mm A	490
0-1.97"/0-50mm	**209-919**	.001"/0.02mm	.0024"/0.06mm	6.57"/167mm	1.17"/30mm	.18"/4.6mm	Ball Ø.12"/3mm B	460
0-1.97"/0-50mm	**209-920**	.001"/0.02mm	.003"/0.08mm	6.57"/167mm	1.42"/36mm	.94"/24mm	Disc Ø1.97"/50mm both/D	500

Optional Accessories

KPL1961-09: SPC Adapter
937387 Digimatic cable (1m)
965013 Digimatic cable (2m)
KPL8004-50 Holder for stand

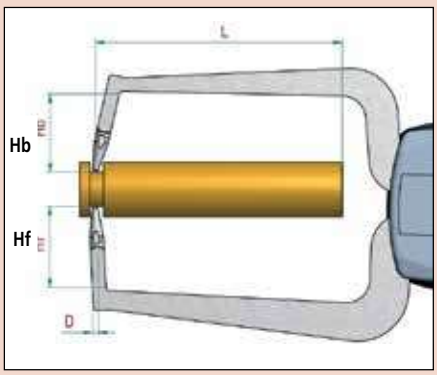

Unit: mm

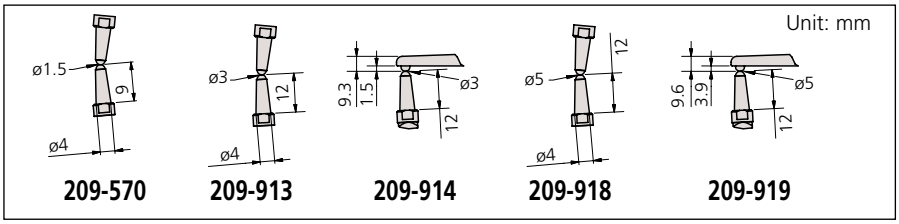

209-570 **209-913** **209-914** **209-918** **209-919**

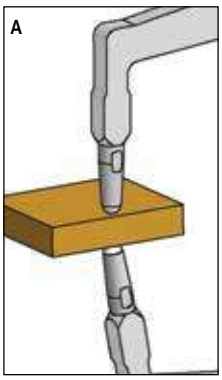

Ball ø 1.5 and 3mm for wall thickness

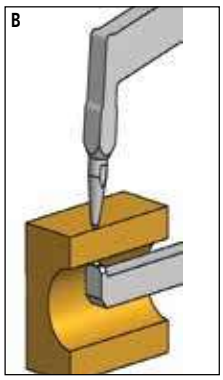

Ball ø 1.5 and 3mm for min. wall thickness ø3mm / 9mm

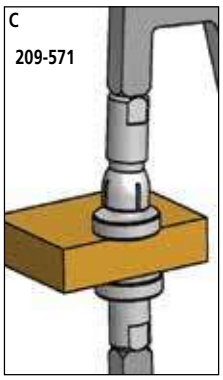

Disk ø6mm for flat surfaces

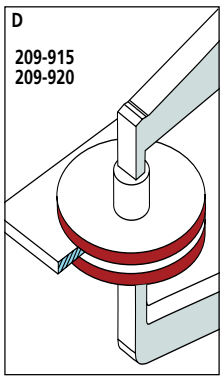

Disk ø50mm for flat surfaces

Mitutoyo

Dial Caliper Gages

SERIES 209 — Internal Measurement

The caliper is spring loaded and makes point contact at a constant measuring pressure.





IP65

DIMENSIONS

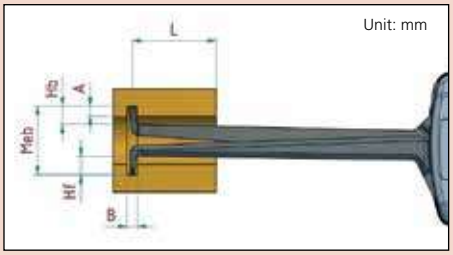

SPECIFICATIONS

Inch

Measuring Range	Order No.	Graduation	Accuracy	Max. Measuring Depth L	Max. Groove Depth A	Min. Groove Width B	Measuring Contact Type	Size (mm)	Mass (g)
.10 - .50"	**209-350**	.0002"	± .0008"	.47"	.027"	.023"	A	R0.1	200
.20 - .60"	**209-351**	.0002"	± .0008"	1.37"	.09"	.032"	B	ø0.6	200
.40 - 1.2"	**209-352**	.0005"	± .0015"	3.3"	.19"	.06"	B	ø1	200
.80 - 1.6"	**209-354**	.0005"	± .0015"	3.3"	.26"	.06"	B	ø1	200
1.2 - 2"	**209-355**	.0005"	± .0015"	3.3"	.26"	.06"	B	ø1	200
1.6 - 2.4"	**209-356**	.0005"	± .0015"	3.3"	.31"	.06"	B	ø1	200
2 - 2.8"	**209-357**	.0005"	± .0015"	3.3"	.31"	.06"	B	ø1	200
2.4 - 3.2"	**209-358**	.0005"	± .0015"	3.3"	.31"	.06"	B	ø1	250
2.8 - 3.6"	**209-359**	.0005"	± .0015"	3.3"	.31"	.06"	B	ø1	250
3.2 - 4"	**209-360**	.0005"	± .0015"	3.3"	.31"	.06"	B	ø1	250
2 - 4"	**209-361***	.0005"	± .0015"	3.3"	.31"	.06"	C	ø1	250
3.6 - 5.6"	**209-362***	.0005"	± .0015"	3.3"	.31"	.06"	C	ø1	250
5.2 - 7.2"	**209-363***	.0005"	± .0015"	3.3"	.31"	.06"	C	ø1	250

*Interchangeable contact points (additional anvil 4 pcs.) with ball point .04" dia. These Dial Caliper Gages are used only as comparison gages and should be used along with a setting ring or a micrometer.

Metric

Measuring Range	Order No.	Graduation	Accuracy	Max. Measuring Depth L	Max. Groove Depth A	Min. Groove Width B	Measuring Contact Type	Size (mm)	Mass(g)
2.5 - 12.5mm	**209-300**	0.005mm	±0.015mm	12mm	0.7mm	0.5mm	A	R0.1	155
5 - 15mm	**209-301**	0.005mm	±0.015mm	35mm	2.3mm	0.8mm	B	ø0.6	160
10 - 30mm	**209-302**	0.01mm	±0.03mm	85mm	5.2mm	1.2mm	B	ø1	180
20 - 40mm	**209-303**	0.01mm	±0.03mm	85mm	7mm	1.2mm	B	ø1	180
30 - 50mm	**209-304**	0.01mm	±0.03mm	85mm	7mm	1.2mm	B	ø1	185
40 - 60mm	**209-305**	0.01mm	±0.03mm	85mm	8.3mm	1.2mm	B	ø1	195
50 - 70mm	**209-306**	0.01mm	±0.03mm	85mm	8.3mm	1.2mm	B	ø1	195
60 - 80mm	**209-307**	0.01mm	±0.03mm	85mm	8.3mm	1.2mm	B	ø1	200
70 - 90mm	**209-308**	0.01mm	±0.03mm	85mm	8.3mm	1.2mm	B	ø1	200
80 - 100mm	**209-309**	0.01mm	±0.03mm	85mm	8.3mm	1.2mm	B	ø1	200
50 - 100mm	**209-310***	0.01mm	±0.03mm	85mm	8.3mm	1.2mm	C	ø1	220
90 - 140mm	**209-311***	0.01mm	±0.03mm	85mm	8.3mm	1.2mm	C	ø1	230
130 - 180mm	**209-312***	0.01mm	±0.03mm	85mm	8.3mm	1.2mm	C	ø1	240
15-65mm	**209-901**	0.05mm	±0.05	188	5	1.9	B	ø1.5mm	355
40-90mm	**209-902**	0.05mm	±0.05	192	8.5	2.4	B	ø2mm	370
70-120mm	**209-903**	0.05mm	±0.05	192	8.5	2.4	B	ø2mm	380

*Interchangeable contact point (additional anvil 5pcs.) with ball point 1mm dia These Dial Caliper Gages are used only as comparison gages and should be used along with a setting ring or a micrometer.

A

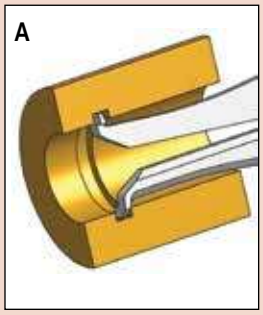

B

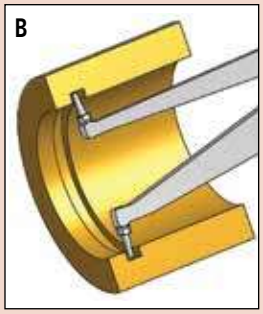

C

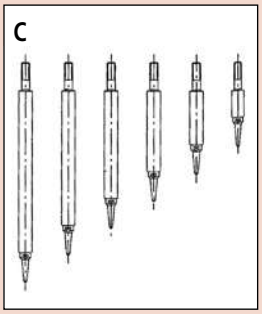

Type of Contact Points

S



Upper / Lower contact point
R0.4 / R0.4: **209-454, 209-405**
R0.75 / R0.75: **209-921**

K/K

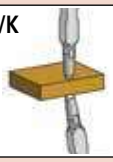

Upper / Lower contact point
ø2.0 / ø2.0 ball: **209-911, 209-916, 209-789**
ø1.5 / ø1.5 ball: **209-450, 209-455, 209-402, 209-404**

R/S

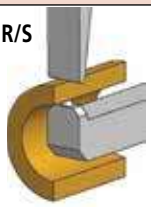

R0.4 / ø1.5 carbide ball: **209-406, 209-453**

RK/K



Upper / Lower contact point
ø1.5 / ø1.5 ball: **209-407, 209-452, 209-456**

S/R

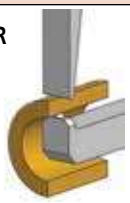

Upper / Lower contact point
R0.75 / ø2 ball: **209-922**

R



Upper / Lower contact point
ø2 / ø2.5 ball: **209-912, 209-917**

T

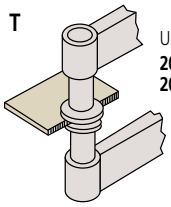

Upper / Lower contact point
209-451:
209-403:

PR

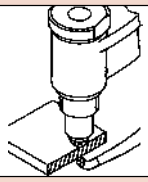

Upper / Lower contact point
ø2 / R0.5: **209-790, 209-603**

PK

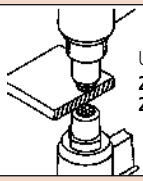

Upper / Lower contact point
209-789:
209-843:

Dial Caliper Gages

SERIES 209 — External Measurement

IP65







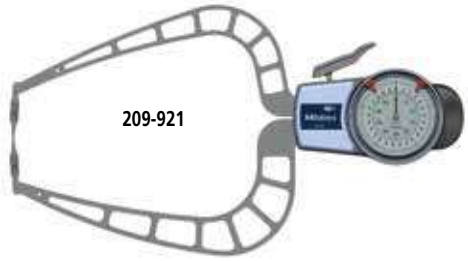

DIMENSIONS

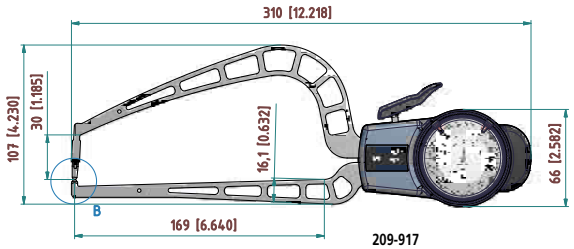

209-917

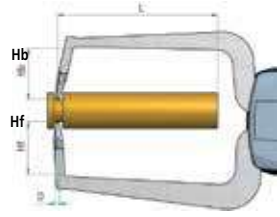

209-4XX

Unit: mm

SPECIFICATIONS

Inch

Measuring Range	Order No.	Graduation	Accuracy	Max. Measuring Depth L	Length Hb	Length Hf	Measuring Contact Type	Size (mm)	Mass (g)
0 - .40"	**209-450**	.0002"	± .0008"	1.37"	.75"	.75"	K/K	ø1.5	170
0 - .40"	**209-451**	.0002"	±- .001"	1.37"	.85"	.58"	T	ø6	175
0 - .40"	**209-452**	.0002"	± .0008"	1.37"	.75"	.035"	RK/K	ø1.5	165
0 - .40"	**209-453**	.0002"	± .0008"	1.37"	.75"	.035"	R/S	Chisel R0.4, ø1.5	165
0- .50"	**209-789**	.005"	± .005"	1.38"	-	-	PK	ø2, Chisel R0.5	40
0- .50"	**209-790**	.005"	± .005"	1.38"	-	-	PR	ø2	40
0 - .80"	**209-454**	.0005"	±- .0015"	3.2"	.97"	.97"	S	Chisel R0.4	210
0 - .80"	**209-455**	.0005"	± .0015"	3.2"	.97"	.97"	K/K	ø1.5	210
0 - .80"	**209-456**	.0005"	± .0015"	3.2"	.97"	.10"	RK/K	ø1.5	200
0 - .80"	**209-457**	.0005"	± .0015"	3.2"	.97"	.10"	R/S	Chisel R0.4, ø1.5	200
0 - 2.0"	**209-916**	.001"	± .002"	6.6"	1.2"	1.2"	K/K	ø3	430
0 - 2.0"	**209-917**	.001"	± .002"	6.6"	1.2"	.18"	RK/K	ø3	400

Metric

Measuring Range	Order No.	Graduation	Accuracy	Max. Measuring Depth L	Length Hb	Length Hf	Measuring Contact	Size (mm)	Mass (g)
0 - 10mm	**209-402**	0.005mm	±0.015mm	35mm	19.1mm	18.6mm	K/K	ø1.5	240
0 - 10mm	**209-403**	0.005mm	±0.02mm	35mm	21.7mm	14.8mm	T	ø6	175
0 - 20mm	**209-404**	0.01mm	±0.03mm	85mm	7mm	24.6mm	K/K	ø1.5	210
0 - 20mm	**209-405**	0.01mm	±0.03mm	85mm	7mm	24.6mm	S	R 0.4	210
0 - 20mm	**209-406**	0.01mm	±0.03mm	80mm	7mm	2.5mm	R/S	Chisel R0.4, ø1.5	200
0 - 20mm	**209-407**	0.01mm	±0.03mm	80mm	7mm	2.5mm	RK/K	ø1.5	200
0 - 10mm	**209-843**	0.1mm	±0.1mm	36mm	-	-	PK	ø2, Chisel R0.5	40
0 - 10mm	**209-603**	0.1mm	±0.1mm	33mm	-	-	PR	ø2	40
0 - 50mm	**209-911**	0.05mm	±0.05mm	167mm	30mm	30mm	KK	Ball Ø3mm	430
0 - 50mm	**209-912**	0.05mm	±0.05mm	169mm	30mm	4.5mm	RK/K	Ball Ø3mm	400
0 - 50mm	**209-921**	0.05mm	±0.05mm	167mm	30mm	30mm	S	Chisel R0.75	490
0 - 50mm	**209-922**	0.05mm	±0.05mm	169mm	30mm	4.5mm	R/S	ø3, Chisel R0.75	400

Mitutoyo

Dial Caliper Gages

SERIES 209 — Internal Measurement

These Dial Caliper Gages are used only as comparison gages and should be used with a setting ring or a micrometer. The caliper is spring loaded and makes point contact at a constant measuring pressure.

Technical Data

Dial Diameter: 2" / 50mm
Measuring Force: 2.0N or less
Repeatability: .001" / 0.025mm

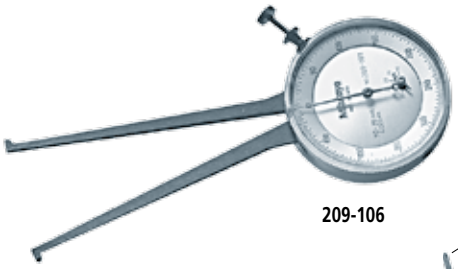

209-106

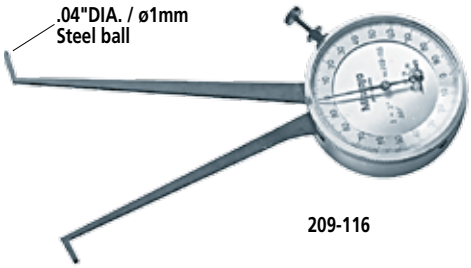

209-116

Metric Yellow Dial Face

Order No.	Range	Graduation	Accuracy
209-106	10–35mm	0.025mm	±0.075mm
209-107	30–55mm	0.025mm	±0.075mm
209-108	50–75mm	0.025mm	±0.075mm

Inch

Order No.	Range	Graduation	Accuracy
209-116	.4"–1.4"	.001"	±.003"
209-117	1.2"–2.2"	.001"	±.003"
209-118	2.0"–3.0"	.001"	±.003"

DIMENSIONS

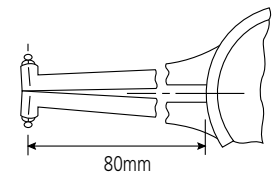

Range	A	B	Mass(g)
10 - 35mm / .4 - 1.4"	2.6mm	2.6mm	85
30 - 55mm / 1.2 - 2.2"	8.5mm	7.5mm	85
50 - 75mm / 2.0 - 3.0"	8.5mm	7.5mm	85

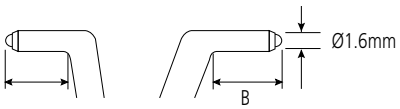

Dial Tension Gages

SERIES 546

Application

Measuring contact force of relay



DIMENSIONS

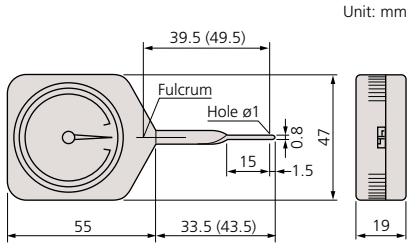

( ): **546-112, 546-113, 546-133**

DIMENSIONS

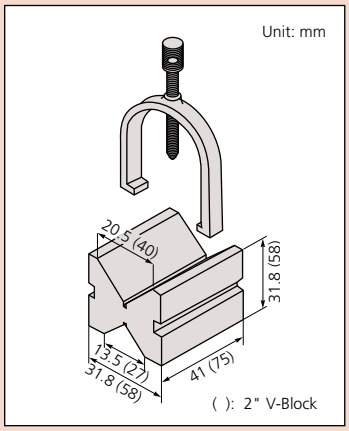

( ): 2" V-Block

DIMENSIONS

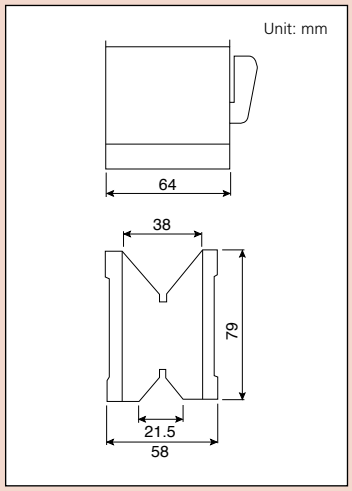

FEATURES

- Can measure dynamic tension in Newton (N) units.
- Dial Tension Gages are widely used to determine the contact force of other measuring instruments, as well as that of electrical relays, micro-switches, valves and precision springs.
- Convenient peak-hold type gages are also available.



546-112
Standard

546-119
Standard

546-137
Peak hold

SPECIFICATIONS

Standard

Range	Order No.	Minimum reading
6mN - 50mN	**546-112**	2mN
10mN - 100mN	**546-113**	5mN
30mN - 300mN	**546-114**	10mN
0.06N - 0.5N	**546-115**	0.02N
0.1N - 1N	**546-116**	0.05N
0.15N - 1.5N	**546-117**	0.05N
0.3N - 3N	**546-118**	0.1N
0.6N - 5N	**546-119**	0.2N

Peak hold

Range	Order No.	Graduation
10mN - 100mN	**546-133**	5mN
30mN - 300mN	**546-134**	10mN
0.06N - 0.5N	**546-135**	0.02N
0.1N - 1N	**546-136**	0.05N
0.15N - 1.5N	**546-137**	0.05N
0.3N - 3N	**546-138**	0.1N
0.6N - 5N	**546-139**	0.2N

V-Block Sets

SERIES 181

FEATURES

- Two V-blocks per set.
- Magnetic type is available. (The magnetic V-block is not provided with a workpiece clamp.)

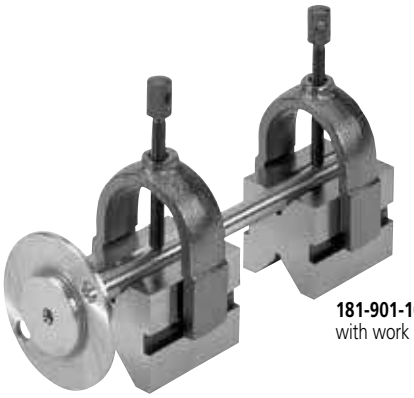

181-901-10
with work piece

SPECIFICATIONS

Inch

Max. workpiece dia.	Order No.	Thread Size	Remarks	Mass(g)
1"	**181-901-10**	UNC 1/4"-20	With clamp	750
2"	**181-904-10**	5/16"-18NC	With clamp	3600

Magnetic V-Block

SERIES 181

SPECIFICATIONS

Metric

Max. workpiece dia.	Order No.	Magnetic Pull	Remarks
50mm	**181-146**	60 kg	1 Piece



181-146

Mitutoyo

Dial Snap Gages

SERIES 201

FEATURES

- Designed for quick go/no-go judgment of diameters of cylinders and shafts in machining processes.
- Dial indicator is optional.
- Anvil retracting stroke: .078" / 2mm
- Anvil positioning range: 1" / 25mm
- Wide (.53 x .47" / 13.5 x 12mm), flat carbide anvils
- Both front edges of the anvil are chamfered for easy insertion.



201-101
with optional dial indicator 2046SB

Technical Data

Accuracy:	Refer to the list of specifications
Anvil retracting stroke:	.078" / 2mm
Anvil positioning range:	1" / 25mm
Anvil flatness:	.00004" / 1µm

SPECIFICATIONS

Metric Gage stem diameter 8mm

Range	Order No.	Parallelism	Measuring force	Recommended dial indicator (optional)
0 - 25mm	**201-101**	5µm or less	15N±3N	**2046SB** (0.01mm reading), **2109SB-10** (0.001mm reading)
25 - 50mm	**201-102**	5µm or less	15N±3N	**2046SB** (0.01mm reading), **2109SB-10** (0.001mm reading)
50 - 75mm	**201-103**	5µm or less	15N±3N	**2046SB** (0.01mm reading), **2109SB-10** (0.001mm reading)
75 - 100mm	**201-104**	5µm or less	15N±3N	**2046SB** (0.01mm reading), **2109SB-10** (0.001mm reading)
100 - 125mm	**201-105**	5µm or less	15N±3N	**2046SB** (0.01mm reading), **2109SB-10** (0.001mm reading)
125 - 150mm	**201-106**	5µm or less	15N±3N	**2046SB** (0.01mm reading), **2109SB-10** (0.001mm reading)
150 - 175mm	**201-107**	5µm or less	15N±3N	**2046SB** (0.01mm reading), **2109SB-10** (0.001mm reading)
175 - 200mm	**201-108**	5µm or less	15N±3N	**2046SB** (0.01mm reading), **2109SB-10** (0.001mm reading)
200 - 225mm	**201-109**	5µm or less	15N±3N	**2046SB** (0.01mm reading), **2109SB-10** (0.001mm reading)
225 - 250mm	**201-110**	5µm or less	15N±3N	**2046SB** (0.01mm reading), **2109SB-10** (0.001mm reading)
250 - 275mm	**201-111**	5µm or less	15N±3N	**2046SB** (0.01mm reading), **2109SB-10** (0.001mm reading)
275 - 300mm	**201-112**	5µm or less	15N±3N	**2046SB** (0.01mm reading), **2109SB-10** (0.001mm reading)

Inch Gage stem diameter 3/8"

Range	Order No.	Parallelism	Measuring force	Recommended dial indicator (optional)
0 - 1"	**201-151**	.00025" or less	15N±3N	**2803SB-10** (.0001" reading)
1 - 2"	**201-152**	.00025" or less	15N±3N	**2803SB-10** (.0001" reading)
2 - 3"	**201-153**	.00025" or less	15N±3N	**2803SB-10** (.0001" reading)
3 - 4"	**201-154**	.00025" or less	15N±3N	**2803SB-10** (.0001" reading)
4 - 5"	**201-155**	.00025" or less	15N±3N	**2803SB-10** (.0001" reading)
5 - 6"	**201-156**	.00025" or less	15N±3N	**2803SB-10** (.0001" reading)
6 - 7"	**201-157**	.00025" or less	15N±3N	**2803SB-10** (.0001" reading)
7 - 8"	**201-158**	.00025" or less	15N±3N	**2803SB-10** (.0001" reading)
8 - 9"	**201-159**	.00025" or less	15N±3N	**2803SB-10** (.0001" reading)
9 - 10"	**201-160**	.00025" or less	15N±3N	**2803SB-10** (.0001" reading)
10 - 11"	**201-161**	.00025" or less	15N±3N	**2803SB-10** (.0001" reading)
11 - 12"	**201-162**	.00025" or less	15N±3N	**2803SB-10** (.0001" reading)

DIMENSIONS

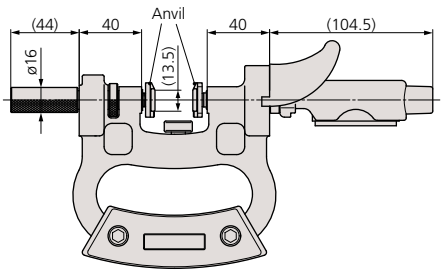

Unit: mm

Dial/Test Indicator & Magnetic Stand Sets

SERIES 7



513-907

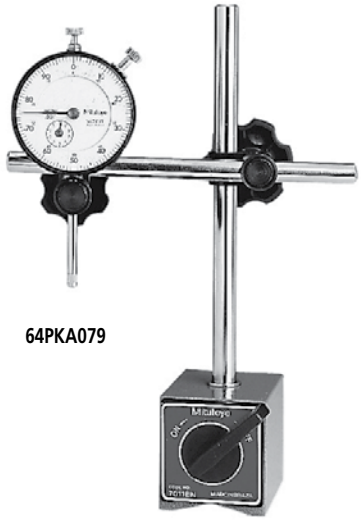

64PKA079

SPECIFICATIONS

Set No.	Included in set
64PKA078*	2804S-10, 7010S
64PKA079*	2416S, 7010S
513-907	513-402, 7014E-10
513-908	513-404E, 7014-10

*Supplied with collar **02AZC291**

Magnetic Stands

SERIES 7

Mitutoyo's Magnetic Stands accept all dial indicators and dial test indicators. The On-Off switch offers instant mounting and dismounting without any adverse effect to the indicators or workpiece surface.



7010S



7011BN



7031B

7032B



7033B



7012-10



7014-10 / 7014E-10
No magnet force On/Off

SPECIFICATIONS

Order No.	Description	Applicable holding stem dia.	Dovetail groove	Remarks
7010S	Magnetic stand	ø6mm, ø8mm*, ø9.53mm (3/8")	—	—
7011BN	Magnetic stand	ø6mm, ø8mm*, ø9.53mm (3/8")	—	With fine adjustment
7011S-10	Magnetic stand	ø4mm, ø8mm, ø9.53mm (3/8")	—	With fine adjustment
7012-10	Magnetic flexi-stand	ø6mm, ø8mm*, ø9.53mm (3/8")	—	For dial test indicator
7014-10	Mini magnetic stand	ø6mm, ø8mm	Provided	Without magnet ON/OFF
7014E-10	Mini magnetic stand	ø6mm, ø8mm*, ø9.53mm (3/8")	Provided	Without magnet ON/OFF
7031B	Universal magnetic stand	ø6mm, ø8mm, ø9.53mm (3/8")	Provided	With mechanical locking system
7032B	Universal magnetic stand	ø6mm, ø8mm, ø9.53mm (3/8")	Provided	With mechanical locking system
7033B	Universal magnetic stand	ø6mm, ø8mm, ø9.53mm (3/8")	Provided	With mechanical locking system

*Supplied with collar **02AZC291**

DIMENSIONS

Unit: mm

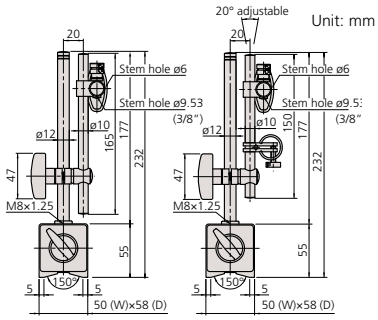

7010S 7011BN

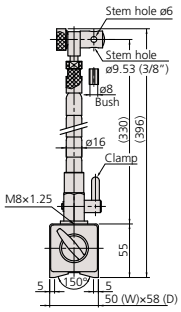

7012-10

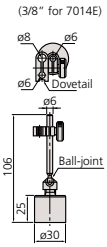

7014-10/7014E-10

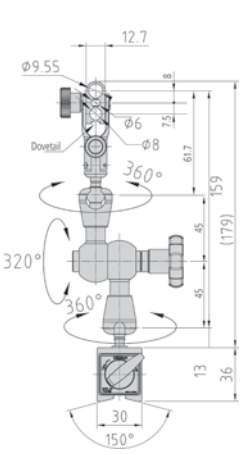

7031B

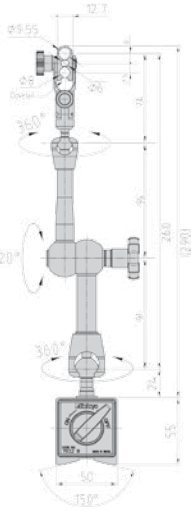

7032B

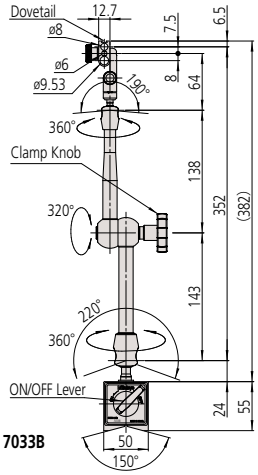

7033B

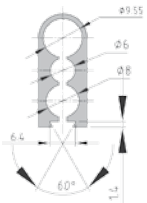

Dial Gage Stands

SERIES 7

FEATURES

- Dial Gage Stands are designed for comparison measurements of size using a dial indicator or Digimatic Indicator.
- Anvil of 7001-10 and 7002-10: ø58mm
  Anvil of 7007-10: 90mm square
- Vertical fine adjustment is available with one-touch control thanks to the parallel spring suspension.



7001-10
(with ø58mm serrated anvil)



7002-10
(with ø58mm flat anvil)



7007-10
(with 90mm square anvil)

SPECIFICATIONS

Metric

Order No.	Stem hole	Remarks	Mass(g)
7001-10	ø8mm, ø9.53mm	With serrated anvil (**101462**)	4
7002-10	ø8mm, ø9.53mm	With flat anvil (**101461**)	4
7007-10	ø8mm, ø9.53mm	With square anvil	5

DIMENSIONS

Unit: mm

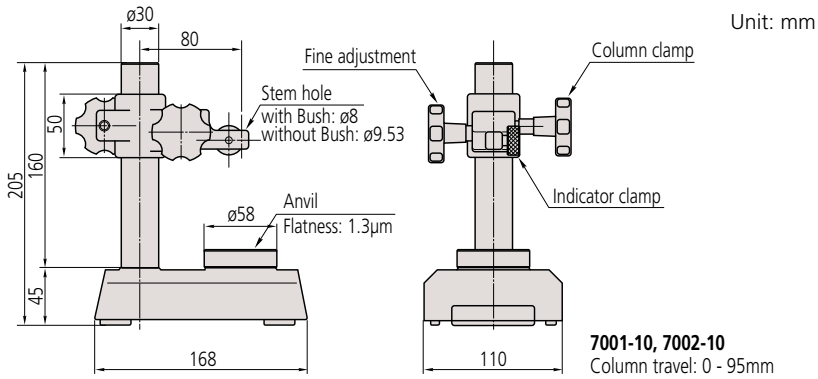

7001-10, 7002-10
Column travel: 0 - 95mm

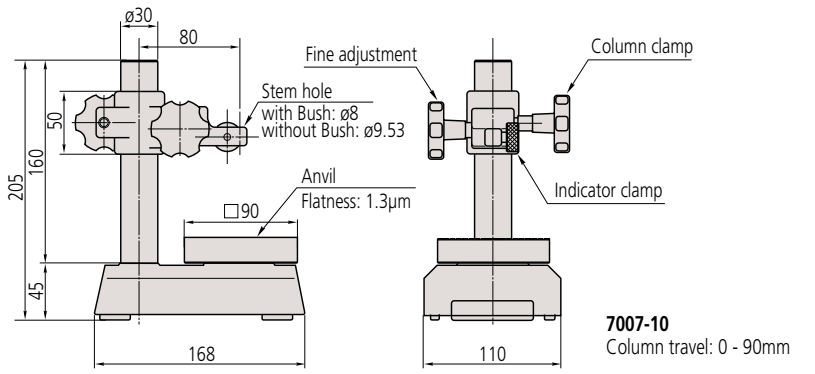

7007-10
Column travel: 0 - 90mm

Optional Accessories

101461: Hardened-steel flat anvil
101462: Hardened-steel serrated anvil
101463: Hardened-steel domed anvil*
*Not available for **7007-10**.



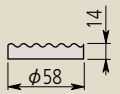

No.101462
Hardened steel



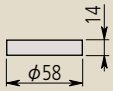

No.101461
Hardened steel



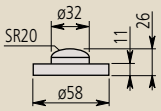

No.101463
Hardened steel

Transfer Stands

SERIES 519

FEATURES

- Transfer Stands are designed for comparison measurements of size using a dial indicator or Digimatic Indicator.



519-109-10
(with a serrated anvil)

Optional Accessories

101461: Hardened-steel flat anvil
101463: Hardened-steel domed anvil



No.101462
Hardened steel

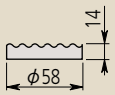



No.101461
Hardened steel

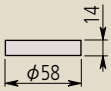



No.101463
Hardened steel

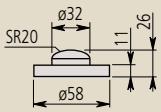

SPECIFICATIONS

Metric

Order No.	Stem hole	Remarks
519-109-10	ø8mm, ø9.53mm	With serrated anvil (**101462**)

DIMENSIONS

Unit: mm

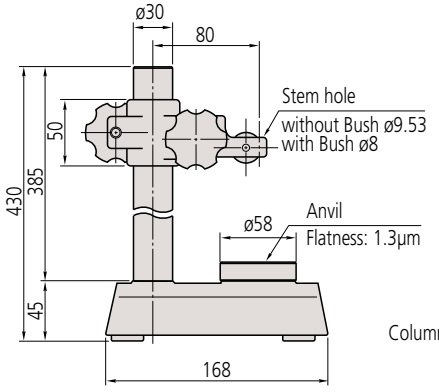

Column travel: 0 - 320mm

Mitutoyo

Granite Comparator Stands

SERIES 215

FEATURES

- Easy maintenance due to the non-rusting base.
- The rigid granite base is free from burrs and pileups due to its fine-grain composition and less viscousness compared with casting iron. The flatness is always accurate and the workpiece is free from damage.

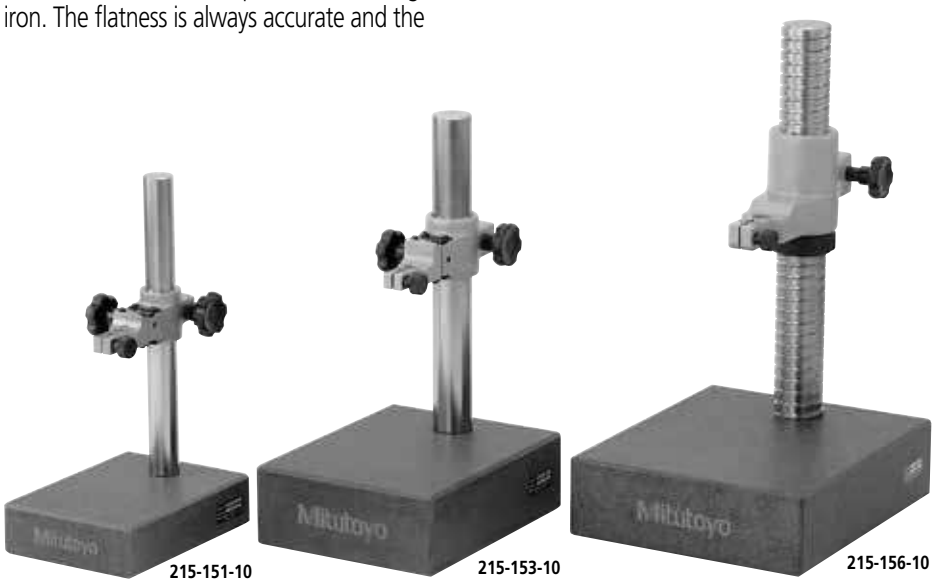

215-151-10 **215-153-10** **215-156-10**

Optional Accessories

21JAA329: ø8mm bush
21JAA330: ø9.53mm bush
21JAA331: ø15mm bush
only available for **215-156-10**

SPECIFICATIONS

Order No.	Granite base size (W x D x H)	Column travel	Stem hole	Remarks
215-151-10	150 x 200 x 50mm	250mm	ø8mm, ø9.53mm	With fine adjustment of 1mm range
215-153-10	200 x 250 x 80mm	260mm	ø8mm, ø9.53mm	With fine adjustment of 1mm range
215-156-10	300 x 250 x 80mm	275mm	ø8mm, ø9.53mm, ø20mm	With fine adjustment over the entire travel

DIMENSIONS

Unit: mm

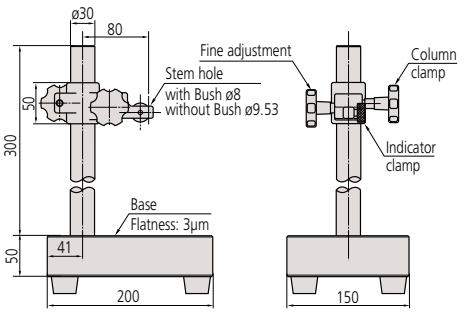

215-151-10
Column travel: 0 - 250mm

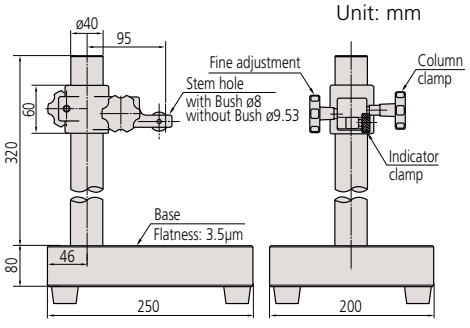

215-153-10
Column travel: 0 - 260mm

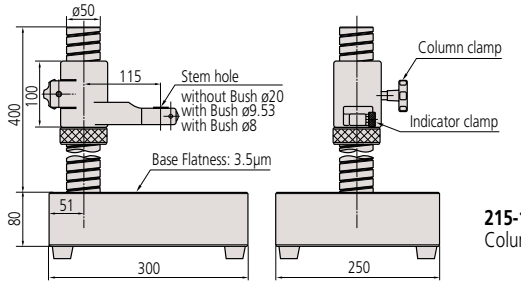

215-156-10
Column travel: 0 - 275mm

Comparator Stands

SERIES 215



Application example using Digimatic Indicator ID-H.

Optional Accessories

21JAA329: ø8mm bush*
21JAA330: ø9.53mm (3/8") bush*
21JAA331: ø15mm bush*
* Only available for **215-505-10**.

FEATURES

- Comparator Stands have a stable, cast-iron base which enables precise measurement.
- The partially serrated anvil prevents flat workpieces from wringing to it and the 2.3µm flatness (or better) promotes accurate measurement.
- The **215-505-10** model has a threaded column which enables easy and precise coarse adjustment.
- Serrated anvils 110×110mm are supplied with **215-405-10**, and 150×150mm with **215-505-10** models.



215-405-10

SPECIFICATIONS

Order No.	Square anvil size (W x D)	Column travel	Stem hole	Remarks
215-405-10	110 x 110mm	235mm	ø8mm, ø9.53mm	With fine adjustment of 1mm range
215-505-10	150 x 150mm	275mm	ø8mm, ø9.53mm, ø20mm	With fine adjustment over the entire travel

* Perpendicularity of the mounting hole to the anvil: less than 0.4mm/100mm

DIMENSIONS

Unit: mm

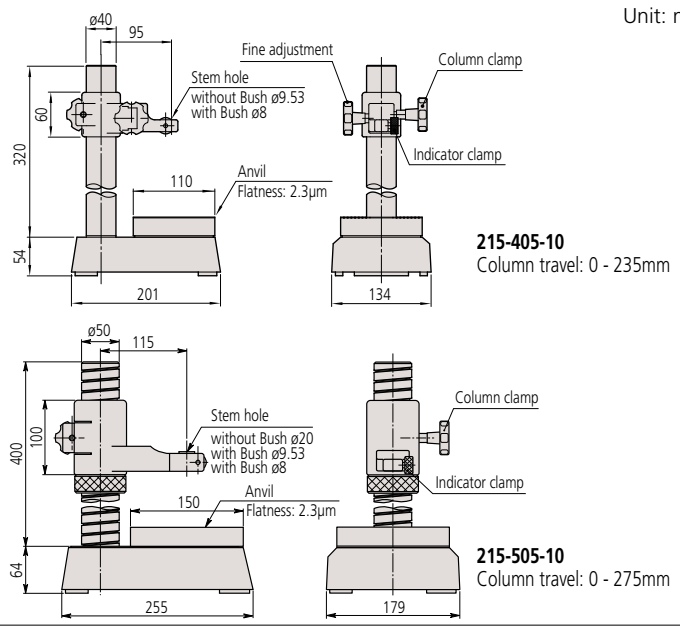

Mitutoyo

Precision Granite Stands (with black granite bases)

SERIES 517

FEATURES

Mitutoyo's Granite Comparator Stands are basic building blocks for the assembly of special purpose, precision measuring equipment. By mounting precision measuring instruments such as Digimatic indicators, Mu-Checker Cartridge Heads and Linear Gages on the stands, it is possible to satisfy all manners of measuring assignment. The rigid granite base is free from burrs, pileups and rust, thereby preventing deterioration over time.



517-891



517-892

Optional Accessories

012580: Holder for Lug-Back indicator

SPECIFICATIONS

Order No.	Base	Column Diameter	Column Height	Throat Clearance	Table Flatness	Table Thickness	Weight
517-890	6 x 8″	1.181″	6″	4.375″	.0001″	2″	18 lbs
517-891	6 x 8″	1.181″	8″	4.375″	.0001″	2″	19 lbs
517-892	6 x 8″	1.181″	12″	4.375″	.0001″	2″	20 lbs
517-893	6 x 8″	1.181″	18″	4.375″	.0001″	2″	21 lbs
517-895	8 x 12″	1.181″	6″	5.8″	.0001″	2″	29 lbs
517-896	8 x 12″	1.181″	8″	5.8″	.0001″	2″	30 lbs
517-897	8 x 12″	1.181″	12″	5.8″	.0001″	2″	31 lbs
517-898	8 x 12″	1.181″	18″	5.8″	.0001″	2″	32 lbs
517-899	8 x 12″	1.181″	24″	5.8″	.0001″	2″	35 lbs

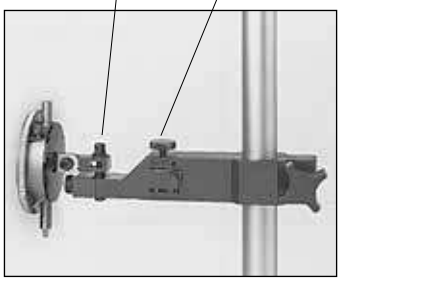



Linear Gages



Mu-checker



Laser Scan Micrometers

INDEX

Linear Gage	
Gage Heads / Display Units Selection Guide	G-2,3
Linear Gage LGK	G-4
Linear Gage LGF	G-5
Linear Gage LGF-Z	G-6
Linear Gage LGB	G-7
Linear Gage LGB2	G-8,9
Linear Gage LG-Long Range	G-10
Linear Gage LG-Long Range, Motorized	G-10,11
Linear Gage LGD	G-12,13
Linear Gage LGS	G-14
Linear Gage LGF-High Resolution	G-15
Linear Gage LGB2-High Resolution	G-16
Linear Gage LGH-High Resolution	G-17
Laser Hologage LGH-High Resolution	G-18
EH Counter-Multi Function	G-19
EC Counter-Single-function	G-20
EG Counter-Single-function	G-21
EB Counter-Single-function	G-22
EV Counter-Multi-function	G-23
EV Counter System Configuration	G-24
D-EV Display Unit	G-25
SENSORPAK Software	G-26
Litematic	G-27
Quick Guide to Precision Measuring Instruments Linear Gages	G-28,29
Mu-checker	G-30-33
Laser Scan Micrometer	
Laser Scan Micrometer Selection Guide	G-34,35
Laser Scan Micrometer LSM-902 / 6900	G-36
Laser Scan Micrometer LSM-500S	G-37
Laser Scan Micrometer LSM-501S	G-38
Laser Scan Micrometer LSM-503S	G-39
Laser Scan Micrometer LSM-506S	G-40
Laser Scan Micrometer LSM-512S	G-41
Laser Scan Micrometer LSM-516S	G-42
Laser Scan Micrometer LSM-9506	G-43
LSM-6200 Display Unit	G-44
LSM-5200 Display Unit	G-45
Laser Scan Micrometer Optional Accessories	G-46-50
Quick Guide to Precision Measuring Instruments Laser Scan Micrometers	G-51



Linear Gage LGK



Laser Scan Micrometer LSM-500S

Mitutoyo

Gage Heads / Display Units

Resolution	Gage Heads Measuring range	5mm / .2"	10mm / .4"	25mm / .1"	
0.00001mm	**Laser Hologage** Page G-17 Page G-18		**542-715A,542-716A,542-925A,** **542-926A,542-927A,542-928A** (Low measuring force)  Page G-17 and G-18		
0.0001mm	**LGB** series (nut clamp) Page G-8 **LGK** series Page G-4 **LGF** series Page G-15	**542-246** Refer to page G-16	**542-158** **542-181**  Page G-4 and G-15	**542-182**  Page G-15	
	Long Stroke series (Motor-drive type) Page G-11				
0.0005mm	**LGK** series Page G-4 **LGF** series Page G-5		**542-171** **542-157**  Page G-45 and G-5	**542-172**  Page G-5	
0.001mm	**LGK** series Page G-4 **LGF** series • 0.5µm high-resolution type Page G-5		**542-156** **542-161** 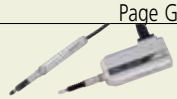 Page G-4 and G-5	**542-162**  Page G-5	
	LGB series (ø8mm Straight) Page G-7	**542-204** Refer to page G-7	**542-222,542-401** (Sine-wave output) **542-222H** (High-precision) **542-223** (air drive) **542-224** (Low measuring force) **542-230** (air drive) Page G-7		
	Long Stroke series (Motor-drive type) Refer to page G-11				
	LGB series (nut clamp) Page G-8	**542-244** Refer to page G-8	**542-262** **542-262H** (High accuracy) **542-264** (Low measuring force) **542-421** (Sine-wave output) **542-270** (Air drive) Page G-8		
0.005mm	**LGF** series Page G-5			**542-612**  Page G-5	
0.0005mm	**LGF** series Series with reference point mark Page G-6		**542-174**  Page G-6	**542-175** 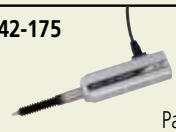 Page G-6	
0.001mm	**LGF** series Series with reference point mark Page G-6		**542-164**  Page G-6	**542-165**  Page G-6	
0.01mm	**LGD** series Page G-12		**575-326**  Page G-12	**575-327**  Page G-12	
	LGS series Page G-14		**575-303**  Page G-14		

Gage Heads			Display unit		
Measuring range					
	50mm / 2"	100mm / 4"	Point measurement	Calculation measurement (addition and subtraction)	Multi-point measurement
			EH Counter **542-074A**  Page G-19		
		542-312 **542-316** 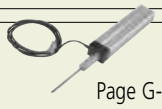 Page G-10	**EG Counter** **542-015**  Page G-21		
		542-313 (Motor-drive type)  Page G-11			
	542-173  Page G-5		**EB Counter** (LGH excluded) **542-092-2**  Page G-22	**EH Counter** **542-071A**  Page G-19	**EV Counter** (LGH excluded) **542-063**  Page G-23 and G-24
	542-163  Page G-5				
		542-332 **542-336**  Page G-10	**EH Counter** **542-075A**  Page G-19		
		542-333 (Motor-drive type)  Page G-11	**EG Counter** **542-015**  Page G-21		
	542-613 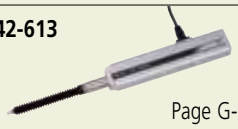 Page G-5		**EG Counter** **542-015**  Page G-21		
	542-176 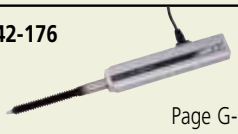 Page G-6		**EG Counter** **542-017**  Page G-21	**EH Counter** **542-073A**  Page G-19	**EV Counter** **542-067**  Page G-23 and G-24
	542-166 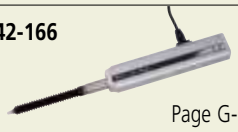 Page G-6		**EB Counter** **542-094-2**  Page G-22		
	575-328 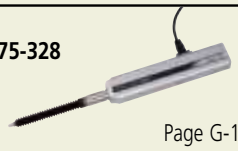 Page G-12		**EC Counter** **542-007A**  Page G-20	**EH Counter** **542-072A**  Page G-19	**EV Counter** **542-064**  Page G-23 and G-24
			EG Counter **542-016**  Page G-21		
			EB Counter **542-093-2**  Page G-22		

Mitutoyo

Linear Gage LGK – Slim, Robust

Series 542 — Resolutions: 0.1µm, 0.5µm, 1µm

- Ideal for integration into harsh environments such as automation applications.
- Compact model offers the vibration/shock resistance of the proven LGF series at 1/5 the size compared to LGF-110L-B. Cross-sectional area is approx. 1/5 compared to LGF-110L-B.
- Resolution of each model can be selected from 0.1µm, 0.5µm, or 1µm.
- Excellent sliding durability improved to remain serviceable for at least 15 million cycles (in-house testing).
- Excellent shock resistance, 100g/11ms (IEC 60068-2-27).

542-158

IP66



542-157

IP66



542 -156

IP66



SPECIFICATIONS

Order No.		542-158	542-157	542-156
Measuring range		10mm (.4")		
Resolution		0.1µm (.000005")	0.5µm (.000020")	1µm (.000050")
Measuring accuracy (20°C)		(0.8+L/50) µm (L=mm)	(1.5+L/50) µm (L=mm)	
Quantizing error		±1 count		
Measuring force	Contact point upward	0.7N or less		
	Contact point horizontal	0.75N or less		
	Contact point downward	0.8N or less		
Position detection method		Photoelectric linear encode		
Response speed*1		400mm/s	1500mm/s	
Output signal		90° phase difference, differential square wave (RS-422A equivalent), minimum edge intervals: 200ns for 0.1µm model, 200ns for 0.5µm model, 400ns for 1µm model		
Output signal pitch		0.4µm	2µm	4µm
Mass		Approx. 175g		
Dust/water resistance*2		Equivalent to IP66 (only gage head)		
Contact point		ø3mm carbide-tipped (fixing screw: M2.5 (P=0.45)×5), standard contact point **No.901312**		
Stem dia.		ø8mm		
Bearing type		Linear ball bearing		
Output cable length		2m (directly from casing)		
Connector		Plug: RM12BPE-6PH (HIROSE), Compatible receptacle: RM12BRD-6S (HIROSE)		
Operating temperature (humidity) range		0 to 40°C (RH 20 to 80%, no condensation)		
Storage temperature (humidity) range		–10 to 60°C (RH 20 to 80%, no condensation)		
Standard Accessories		Wrench for contact point: **No.538610**		
Remarks		Gold banded	Blue banded	Green banded

*1: When the spindle speed exceeds 1500mm/s (400mm/s for 0.1µm model), an alarm signal will be output. Also, if using Mitutoyo counter, an error message will be displayed. If using counters made by other companies, please inquire separately for the alarm signals. For the models of 0.1µm resolution, note that over-speed error may occur depending on the impact amount when releasing the contact point freely.

*2: IP Code is a standard which classifies and rates the degree of protection provided against the intrusion of solid objects and water. This may not be applicable depending on the kind of liquid.

DIMENSIONS

Unit: mm

542-158

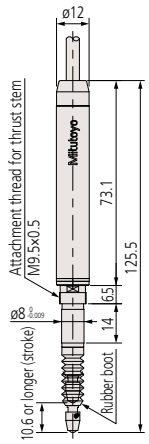

542-157

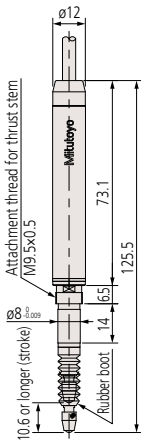

542-156

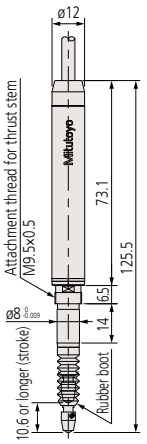

Connector

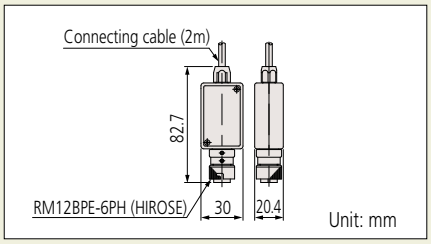

Optional Accessories

- Air lifter 10: **No.02ADE230**

* Required air pressure: 0.2 to 0.4MPa
* Spindle extends when air is supplied.



- Rubber boot: **No.238772** (spare)
  Thrust stem set: ***No.02ADB680**
  Thrust stem: **No.02ADB681**
  Clamp nut: **No.02ADB682**
  Spanner wrench: **No.02ADB683**

* A thrust stem set is a combination of thrust stem and a clamp nut. A special spanner is required for tightening. If using multiple gages, a thrust stem set for each gage and one special spanner are required.

Extension cable (5m): **902434**
Extension cable (10m): **902433**
Extension cable (20m): **902432**

Applicable Counters

542-075A EH-101P
542-071A EH-102P
64PKA131 EG-101P
64PKA134 EB-11P
64PKA137 EV-16P (not compatible with 542-158)

Linear Gage LGF – Standard Dimensions, Robust

Series 542 — Resolutions: 0.5µm, 1µm, 5µm

- Excellent vibration/shock resistance due to the design of the spindle guide section.
- Sliding durability improved to remain serviceable for at least 15 million cycles (in-house testing).
- Shock resistance, 100g/11ms (IEC 60068-2-27)
- LGF-Z series, which is equipped with reference point mark on the linear encoder (refer to page G-7), and 0.1µm resolution type (refer to page G-16) are also available.

Connector

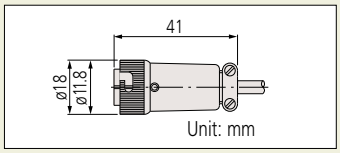

Optional Accessories

- Air drive unit
  For 10mm range models: **No.02ADE230**
  For 25mm range models: **No.02ADE250**
  For 50mm range models: **No.02ADE270**

* Required air pressure: 0.2 to 0.4MPa
* Spindle extends when air is supplied.



- Rubber boot (spare)
  For 10mm range models: **No.238772**
  For 25mm range models: **No.962504**
  For 50mm range models: **No.962505**
- Thrust stem set
  For 10mm range models: **No.02ADB680**
  Thrust stem: **No.02ADB681**
  Clamp nut: **No.02ADB682**
  For 25/50mm range models: **No.02ADN370**
  Thrust stem: **No.02ADN371**
  Clamp nut: **No.02ADB692**

* External dimensions are described in the dimensional drawing of the product.
* A thrust stem set is a combination of thrust stem and a clamp nut. A special spanner is required for tightening. If using multiple gages, a thrust stem set for each gage and one special spanner are required.

- Spanner wrench
  For 10mm range models: **No.02ADB683**
  For 25/50mm range models: **No.02ADB693**

Extension cable (5m): **902434**
Extension cable (10m): **902433**
Extension cable (20m): **902432**

Applicable Counters

542-075A EH-101P
542-071A EH-102P
64PKA131 EG-101P
64PKA134 EB-11P
64PKA137 EV-16P (not compatible with 542-158)

542-171, -161



542-172, -162



542-173, -163



542-612, -613



SPECIFICATIONS

Order No.		542-171	542-161	542-172	542-162	542-612	542-173	542-163	542-613
Measuring range		10mm (.4")		25mm (1")			50mm (2")		
Resolution		0.5µm (.000020")	1µm (.000050")	0.5µm (.000020")	1µm (.000050")	5µm (.0002")	0.5µm (.000020")	1µm (.000050")	5µm (.0002")
Measuring accuracy (20°C) L=arbitrary measuring length (mm)		(1.5+L/50) µm				(7.5+L/50) µm	(1.5+L/50) µm		(7.5+L/50) µm
Quantizing error		±1 count							
Measuring force	Contact point upward	1.0N or less		4.0N or less			4.9N or less		
	Contact point horizontal	1.1N or less		4.3N or less			5.3N or less		
	Contact point downward	1.2N or less		4.6N or less			5.7N or less		
Position detection method		Photoelectric linear encoder							
Response speed*1		1500mm/s							
Output		90° phase difference, differential square wave (**RS-422A** equivalent), minimum edge intervals: 1000ns for 5µm model, 500ns for 1µm model, 250ns for 0.5µm model							
Output square wave pitch		2µm	4µm	2µm	4µm	20µm	2µm	4µm	20µm
Mass		Approx. 260g		Approx. 300g			Approx. 400g		
Dust/water resistance		Equivalent to IP66 (only gage head)							
Contact point		ø3mm carbide-tipped (fixing screw: M2.5 (P=0.45)x5), standard contact point **No.901312**							
Stem dia.		ø8mm		ø15mm					
Bearing type		Linear ball bearing							
Output cable length		2m (directly from casing)							
Connector		Plug: RM12BPE-6PH (HIROSE), Compatible receptacle: RM12BRD-6S (HIROSE)							
Operating temperature (humidity) range		0 to 40°C (RH 20 to 80%, no condensation)							
Storage temperature (humidity) range		–10 to 60°C (RH 20 to 80%, no condensation)							
Standard accessories		Wrench for contact point: **No.538610**		Wrench for contact point: **No.04GAA857**					

*1: When the spindle speed exceeds 1500mm/s, an alarm signal will be output. Also, if using a Mitutoyo counter, an error message will be displayed. If using counters made by other companies, please inquire separately for the alarm signals. For the models using 50mm stroke gage, note over-speed speed error may occur depending on the impact amount when releasing the contact point freely.
*2: IP Code is a standard which classifies and rates the degree of protection provided against the intrusion of solid objects and water. This may not be applicable depending on the kind of liquid.

DIMENSIONS

Unit: mm

542-171, -161

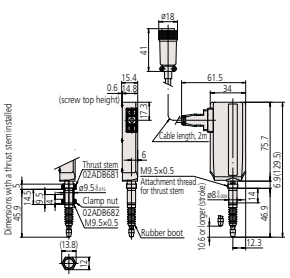

542-172, -162, -612

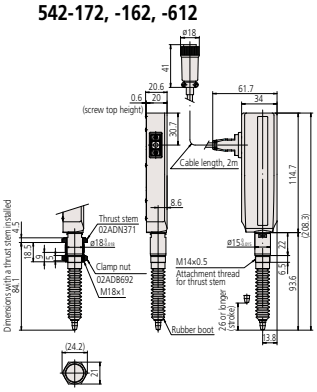

542-173, -163, -613

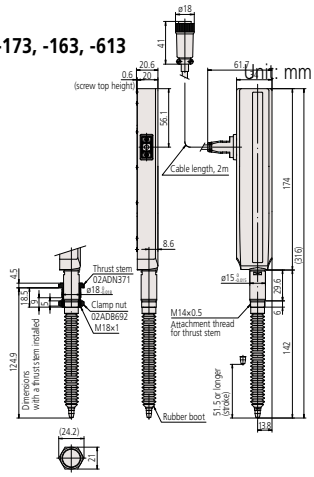

Linear Gage LGF-Z – with Reference Point, Standard Dimensions, Robust

Series 542 — Resolutions: 0.5µm, 1µm

- LGF series with reference point signal output function.
  The master setting to use it, incorporated in the unit, is easy to operate. The origin point can be easily detected even when a fault, such as over-speed error, etc. occurs.
- Sliding durability improved to remain serviceable for at least 15 million cycles (in-house testing).
- Shock resistance, 100g/11ms (IEC 60068-2-27).
- Resolutions are available in 0.5µm or 1µm.

542-174, -164



542-175, -165



542-176, -166



SPECIFICATIONS

Order No.		542-174	542-164	542-175	542-165	542-176	542-166
Measuring range		10mm (.4")		25mm (1")		50mm (2")	
Resolution		0.5µm (.000020")	1µm (.000050")	0.5µm (.000020")	1µm (.000050")	0.5µm (.000020")	1µm (.000050")
Measuring accuracy (20°C)		(1.5+L/50)µm (L= measuring length (mm))					
Quantizing error		±1 count					
Measuring force	Contact point upward	1.0N or less		4.0N or less		4.9N or less	
	Contact point horizontal	1.1N or less		4.3N or less		5.3N or less	
	Contact point downward	1.2N or less		4.6N or less		5.7N or less	
Position detection method		Photoelectric linear encoder					
Reference mark position		3mm from contact point tip (lowest rest point)		5mm from contact point tip (lowest rest point)			
Reference mark repeatability (20°C): σ		σ≤0.5µm (at a constant reference point passing speed less than 300mm/s in the same direction)					
Response speed*1		1500mm/s					
Output signal		90° phase difference, differential square wave (RS-422A equivalent), minimum edge intervals: 250ns for 0.5µm model, 500ns for 1µm model					
Output square wave pitch		2µm	4µm	2µm	4µm	2µm	4µm
Mass		Approx. 260g		Approx. 300g		Approx. 400g	
Dust/water resistance*2		Equivalent to IP66 (only gage head)					
Contact point		ø3mm carbide-tipped (fixing screw: M2.5 (P=0.45)×5), standard contact point **No.901312**					
Stem dia.		ø8mm		ø15mm			
Bearing type		Linear ball bearing					
Output cable length		2m (directly extended from the main unit)					
Connector		Plug: PRC05-P8M (TAJIMI), Compatible receptacle: PRC05-R8F (TAJIMI)					
Operating temperature (humidity) range		0 to 40°C (RH 20 to 80%, no condensation)					
Storage temperature (humidity) range		–10 to 60°C (RH 20 to 80%, no condensation)					
Standard accessories		Wrench for contact point: **No.538610**		Wrench for contact point: **No.04GAA857**			
Remarks		w/ origin point mark					

*1: When the spindle speed exceeds 1500mm/s, an alarm will signal. For use of alarm signals, please inquire separately. For models with 50mm stroke, note that over-speed error may occur depending on the impact amount when releasing the contact point freely.

*2: IP code is a standard which classifies and rates the degree of protection provided against the intrusion of solid objects and water. This may not be applicable depending on the kind of liquid.

DIMENSIONS

Unit: mm

542-174, -164

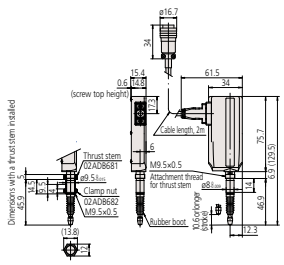

542-175, -165

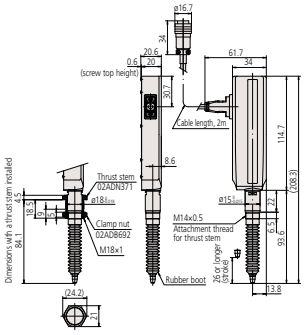

542-176, -166

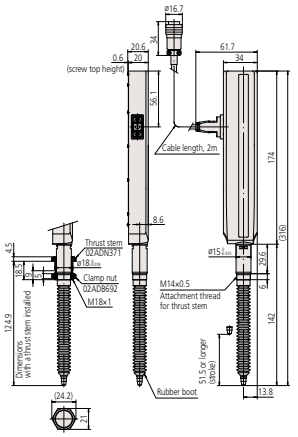

Connector

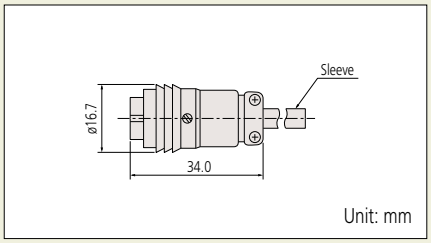

Unit: mm

Optional Accessories

- Air drive unit
  For 10mm range models: **No.02ADE230**
  For 25mm range models: **No.02ADE250**
  For 50mm range models: **No.02ADE270**

* Required air pressure: 0.2 to 0.4MPa

* Spindle extends when air is supplied.



- Rubber boot (spare)
  For 10mm range models: **No.238772**
  For 25mm range models: **No.962504**
  For 50mm range models: **No.962505**
- Thrust stem set
  For 10mm range models: **No.02ADB680**
  Thrust stem: **No.02ADB681**
  Clamp nut: **No.02ADB682**
  For 25/50mm range models: **No.02ADN370**
  Thrust stem: **No.02ADN371**
  Clamp nut: **No.02ADB692**

* External dimensions are described in the dimensional drawing of the product.

* Thrust stem set is a combination of thrust stem and a clamp nut. A special spanner is required for tightening. If using multiple gages, a thrust stem set for each gage and one special spanner are required.

- Spanner wrench
  For 10mm range models: **No.02ADB683**
  For 25/50mm range models: **No.02ADB693**

Extension cable (5m): **02ADF260**
Extension cable (10m): **02ADF280**
Extension cable (20m): **02ADF300**

Applicable Counters

542-073A EH-102Z
64PKA133 EG-101Z
64PKA136 EB-11Z
64PKA139 EV-16Z

Linear Gage LGB - Slim

Series 542 — Resolution: 1µm

Optional Accessories

- Rubber boot (spare)
  For 5mm range models: **No.238773**
  For 10mm range models: **No.238772**
- Extension cable (5m): **902434**
- Extension cable (10m): **902433**
- Extension cable (20m): **902432**

Applicable Counters

542-075A EH-101P
542-071A EH-102P
64PKA131 EG-101P
64PKA134 EB-11P
64PKA137 EV-16P
542-074A EH-1025 (for sine wave gages only)

- Compact form (ø8mm straight stem) is an optimal choice as a built-in type sensor.
- The spindle guide uses high-precision linear ball bearings for extremely smooth movement and exceptional durability.
- Nut clamp type is also available (LGB2: refer to page G-9).

542-204
IP54



542-222, 542-222H, 542-224
IP54



542-230
IP54



SPECIFICATIONS

Type		L-shaped	Straight		Low measuring force	Air-driven contact point *1		Sine-wave output type
Order No.		**542-204**	**542-222**	**542-222H**	**542-224**	**542-230***2	**542-223***3	**542-401**
Measuring range		5mm (.2")	10mm (.4")					
Resolution		1µm (.000050")						*4
Measuring accuracy (20°C)		2µm		1µm	2µm			
Quantizing error		±1 count						
Measuring force*4	Contact point upward	Approx. 0.55N or less	Approx. 0.7N or less		Approx. 0.5N or less	Approx. 0.7N or less		
	Contact point horizontal	Approx. 0.6N or less	Approx. 0.75N or less		Approx. 0.55N or less	Approx. 0.45N or less		
	Contact point downward	Approx. 0.65N or less	Approx. 0.8N or less		Approx. 0.6N or less	Approx. 0.8N or less		
Protection level		Equivalent to IP54 (only gage head)						
Mass		145g	150g			165g		160g

*1: Required air pressure: 0.3 to 0.4MPa
*2: Spindle extends when air is supplied.
*3: Spindle retracts when air is supplied.
*4: Depends on the settings of the connected counter. Potential resolution down to 1µm.

Slim-head low-measuring force series (made to order)

- Low measuring force, suitable for measurement of soft material workpieces.

Model		LGB-105L-1	LGB-110A-1/LGB-110AR-1*2
Measuring range		5mm	10mm
Resolution		1µm	1µm
Measuring force*1	Contact point upward	Approx. 0.4N or less	Approx. 0.5N or less
	Contact point horizontal	Approx. 0.45N or less	Approx. 0.55N or less
	Contact point downward	Approx. 0.5N or less	Approx. 0.6N or less

*1: Measuring force at the retraction of the spindle
*2: The "R" suffix indicates air retracted spindle

The LGB-□□□-1 is la low measuring force model. Depending on the operating method, the spindle forward speed may become slow compared to the standard model. Please check if this restriction is compatible with the application. Please contact Mitutoyo to verify the application.

Connector

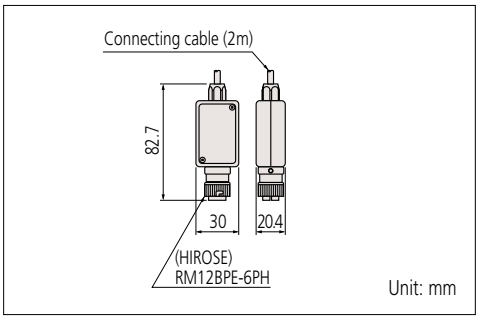

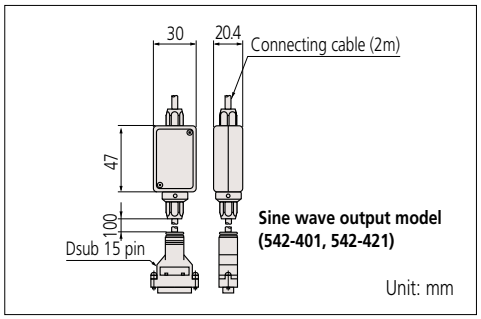

External dimensions: refer to page G-9.

Mitutoyo

Linear Gage LGB2 – Slim, w/Clamp Nut

Series 542 — Resolution: 1µm

- Slim design, nut clamp type (Stem dia. is ø9.5mm)
- The spindle guide uses high precision linear ball bearings for extremely smooth movement and exceptional durability.

542-244

IP54



542-262/542-262H
542-264

IP54



542-270

IP54



SPECIFICATIONS

Type		L-shaped	Straight		Low measuring force	Air-driven contact point*1	Sine-wave output type
Order No.		**542-244**	**542-262**	**542-262H**	**542-264**	**542-270***2	**542-421**
Measuring range		5mm (.2")	10mm (.4")				
Resolution		1µm (.000050")					*3
Measuring accuracy (20°C)		2µm		1µm	2µm		
Maximum response speed		900mm/s					
Measuring force	Contact point upward	Approx. 0.55N or less	Approx. 0.7N or less		Approx. 0.5N or less	Approx. 0.7N or less	
	Contact point horizontal	Approx. 0.6N or less	Approx. 0.75N or less		Approx. 0.55N or less	Approx. 0.75N or less	
	Contact point downward	Approx. 0.65N or less	Approx. 0.8N or less		Approx. 0.6N or less	Approx. 0.8N or less	
Protection level*4		IP54					
Mass		160g	170g			170g	180g

*1: Required air pressure: 0.3 to 0.4MPa
*2: Spindle extends when air is supplied.
*3: Depends on the settings of the connected counter. Potential resolution down to 1µm.
*4: IP code is a standard which classifies and rates the degree of protection provided against the intrusion of solid objects and water. This may not be applicable depending on the type of liquid.

Slim head low measuring force series (made to order)

- Low measuring force, suitable for measurement of soft-material workpieces.

Model		LGB2-105L-1	LGB2-110AR-1
Measuring range		5µm	10µm
Resolution		1µm	1µm
Measuring force*	Contact point upwards	Approx. 0.4N or less	Approx. 0.5N or less
	Contact point horizontal/ Contact point upwards	Approx. 0.45N or less	Approx. 0.55N or less
	Contact point downwards	Approx. 0.5N or less	Approx. 0.6N or less

* Measuring force at the retraction of the spindle

The LGB2-□□□-1 is a low measuring force model. Depending on the operating method, the spindle forward speed may become slow compared to the standard model. Please check if this restriction is compatible with the application. Please contact Mitutoyo to verify the application

Connector

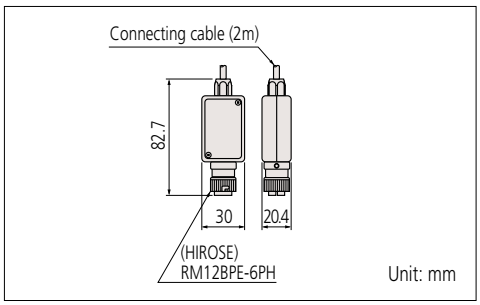

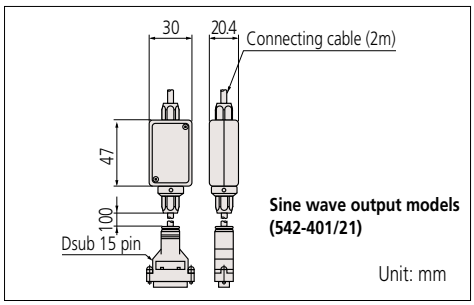

External dimensions: refer to page G-9.

Optional Accessories

- Rubber boot (spare)
  For 5mm range models: **No.238773**
  For 10mm range models: **No.238772**
- Extension cable (5m): **902434**
- Extension cable (10m): **902433**
- Extension cable (20m): **902432**

Applicable Counters

542-075A EH-101P
542-071A EH-102P
64PKA131 EG-101P
64PKA134 EB-11P
64PKA137 EV-16P
542-074A EH-1025 (for sine wave gages only)

Linear Gage LGB2 – Slim

Series 542 — Resolution: 1µm

Applicable Counters

542-075A EH-101P
542-071A EH-102P
64PKA131 EG-101P
64PKA134 EB-11P
64PKA137 EV-16P
542-074A EH-1025 (for sine wave gages only)

DIMENSIONS

Unit: mm

542-204

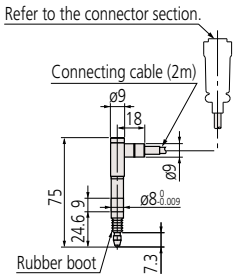

542-222/No.542-222H
542-224

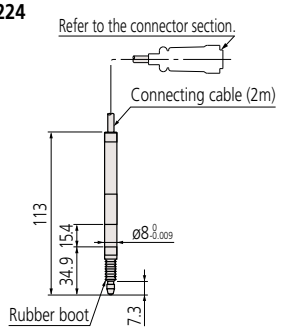

542-230

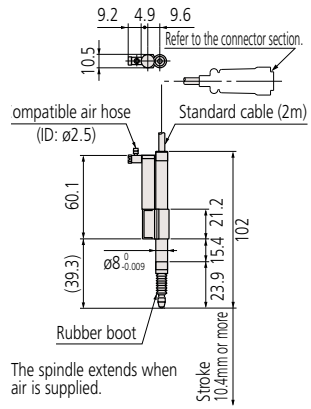

The spindle extends when air is supplied.

542-401

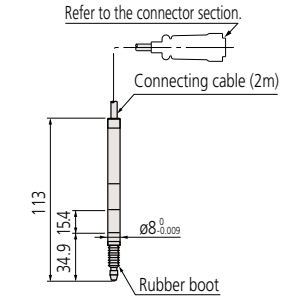

Connectable to Mitutoyo linear scale counter.

542-223

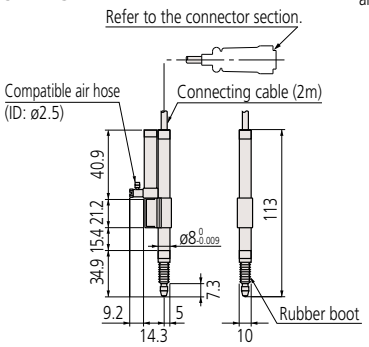

The spindle retracts when air is supplied.

542-244

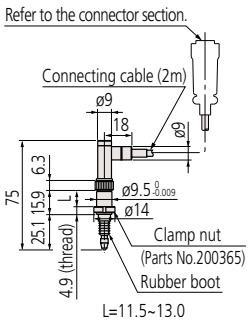

542-262/542-262H
542-264

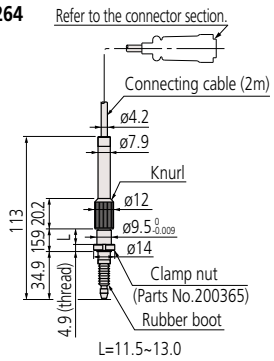

542-270

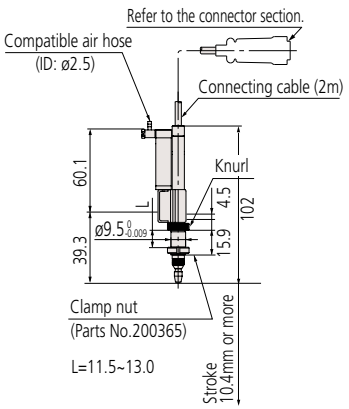

The spindle extends when air is supplied.

542-421

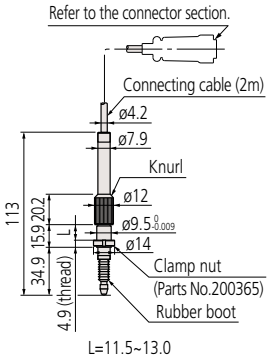

Connectable to Mitutoyo linear scale counter.

Mitutoyo

Linear Gage LG – Long Range

Series 542 — Resolutions: 0.1µm, 1µm

- A series to cover maximum measuring range, 100mm.
- Three versions are available; standard model, low measuring force model, and rubber boot type (made to order).
- The resolution of each model can be selected from 0.1µm and 1µm.

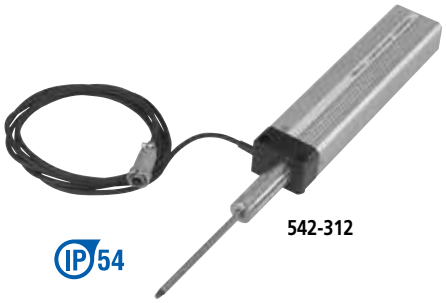

542-312

SPECIFICATIONS

Type		Standard spar type	Low measuring force	Rubber boot type	Standard spar type	Low measuring force	Rubber boot type
Order No.		**542-312**	**542-316**	**542-314**	**542-332**	**542-336**	**542-334**
Measuring range		100mm (4")					
Resolution		0.1µm (.000005")			1µm (.000050")		
Measuring accuracy (20°C)		(2+L/100)µm≤2.5µm L= measuring length (mm)			(2+L/100)µm≤2.5µm L= measuring length (mm)		
Quantizing error		±1 count					
Measuring force	Contact point downward	Approx. 8.0N or less	Approx. 3.0N or less	Approx. 8.0N or less	Approx. 8.0N or less	Approx. 3.0N or less	Approx. 8.0N or less
	Contact point horizontal	Approx. 6.5N or less	—	Approx. 6.5N or less	Approx. 6.5N or less	—	Approx. 6.5N or less
	Contact point upward	Approx. 5.0N or less	—	Approx. 5.0N or less	Approx. 5.0N or less	—	Approx. 5.0N or less
Position detection method		Photoelectric linear encoder					
Response speed*1 (max. electrical response speed)		Approx. 400mm/s			Approx. 800mm/s		
Output signal		90° phase difference, differential squarewave (RS-422A equivalent)					
Spindle drive		Helical extension spring					
Spindle guide		Bearing guide					
Stem diameter		ø20mm					
Contact point		ø3mm carbide-tipped (fixing screw: M2.5 (P=0.45)×5) Standard contact point No.901312					
Shock resistance		60g (in-house testing)					
Cable length		Approx. 2m (directly extended from the gage unit)					
Spindle sealing method		Scraper type		Rubber boot type	Scraper type		Rubber boot type
Dust/water resistance*2		Equivalent to IP54		Equivalent to IP66	Equivalent to IP54		Equivalent to IP66
Operating temperature (humidity) range		0 to 40°C (RH 20 to 80%, no condensation)					
Storage temperature (humidity) range		–10 to 60°C (RH 20 to 80%, no condensation)					
Input/output connector		For calculation: RM12BPE-6PH (HIROSE) Compatible receptacle: RM12BRD-6S (HIROSE)					
Mass (including cables)		Approx. 750g		Approx. 780g	Approx. 750g		Approx. 780g
Standard accessories		Wrench for contact point: **No.04GAA857** Hexagon socket head cap screw, M4×0.7×35, 2 pcs. (for gage fixing) Round flat washer, nominal 4, 2 pcs. (for gage fixing) Lifting clip: **No.137693** Fixing holder: **02ADG181** (for fixing lifting lever)					
Remarks		Standard	Low measuring force	w/ rubber boot	Standard	Low measuring force	w/ rubber boot

*1: Note that over-speed error may occur depending on the indentation amount when releasing the contact point freely after indentation.
*2: IP code is a standard which classifies and rates the degree of protection provided against the intrusion of solid objects and water. This may not be applicable depending on the kind of liquid. (Only gage head)

DIMENSIONS

Unit: mm

542-312, -316, -332, -336

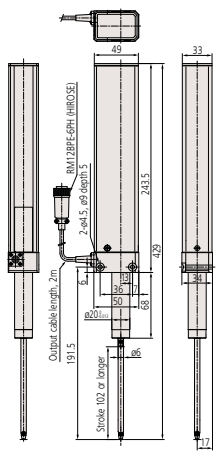

542-314, -334

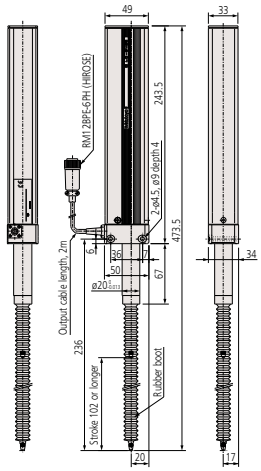

Lifting clip attachment

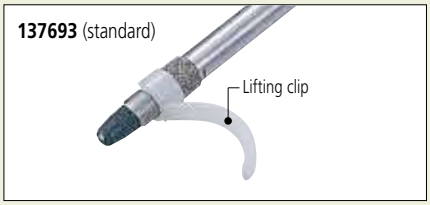

Optional Accessories

- Rubber boot: **02ADA004** (for rubber boot type)

Extension cable (5m): **902434**
Extension cable (10m): **902433**
Extension cable (20m): **902432**

Applicable Counters

For **542-312, 542-316, 542-314**

542-075A	EH-101P
542-071A	EH-102P
64PKA131	EG-101P
64PKA134*	EB-11P

For **542-332, 542-336, 542-334**

542-075A	EH-101P
542-071A	EH-102P
64PKA131	EG-101P
64PKA134*	EB-11P
64PKA137*	EV-16P

* Not for use with 0.1µm resolution gages.

Linear Gage LG – Long Range, Motorized

Series 542 — Resolutions: 0.1µm, 1µm

- Long stroke (100mm), motor-driven spindle.
- Rubber boot type (made-to-order) is also available.
- Resolutions are available in 0.1µm and 1µm.



542-313

Motor drive unit
No.02ADG400
(standard accessory for LGM series main unit)



- A unit to move the spindle of the LGM series forward and backward.

Measuring force
Can be set with the rotary switch of the main unit (to one of the combinations of H/L and a number between 0 and 9) depending on the mounting position.

External dimensions
90 (W)×175 (D)×74 (H)mm (rubber boot excluded)

External input signal
Spindle retract
Spindle extend

External output signal
Spindle stop signal at upper limit

Mass
Approx. 700g

Power supply
120V AC

Optional Accessories
- Rubber boot: **02ADA004** (for rubber boot type)

Extension cable (5m): **902434**
Extension cable (10m): **902433**
Extension cable (20m): **902432**

Applicable Counters
For **542-313**, and **542-315**

542-075A	EH-101P
542-071A	EH-102P
64PKA131	EG-101P
64PKA134*	EB-11P

For **542-333,** and **542-335**

542-075A	EH-101P
542-071A	EH-102P
64PKA131	EG-101P
64PKA134*	EB-11P
64PKA137*	EV-16P

* Not for use with 0.1µm resolution gages.

SPECIFICATIONS

Type		Standard spar type	Rubber boot type	Standard spar type	Rubber boot type
Order No.		**542-313**	**542-315**	**542-333**	**542-335**
Measuring range		100mm (4")			
Resolution		0.1µm (.000005")		1µm (.000050")	
Measuring accuracy (20°C)		(2+L/100) µm ≤ 2.5µm L=arbitrary measuring length (mm)		(2.5+L/100) µm ≤ 3µm L=arbitrary measuring length (mm)	
Quantizing error		±1 count			
Measuring force	Contact point downward	H4 (9.5N)	L9 (6.0N)	H4 (9.5N)	L9 (6.0N)
	Contact point horizontal	L7 (6.5N)	—	L7 (6.5N)	—
	Contact point upward	L3 (3.0N)	L4 (4.5N)	L3 (3.0N)	L4 (4.5N)
Position detection method		Reflection-type photoelectric linear encoder			
Response speed*1 (max. electrical response speed)		Approx. 400mm/s		Approx. 800mm/s	
Output signal		90° phase difference, differential squarewave (RS-422A equivalent)			
Spindle drive		Motor drive			
Spindle guide		Bearing guide			
Stem diameter		ø20mm			
Contact point		ø3mm carbide-tipped (fixing screw: M2.5 (P=0.45)×5) Standard contact point: **No.901312**			
Shock resistance		60g (in-house testing)			
Cable length		Approx. 2m (directly extended from the gage unit)			
Spindle sealing method		Scraper type	Rubber boot type	Scraper type	Rubber boot type
Dust/water resistance*2		Equivalent to IP54	Equivalent to IP66	Equivalent to IP54	Equivalent to IP66
Operating temperature (humidity) range		0 to 40°C (RH 20 to 80%, no condensation)			
Storage temperature (humidity) range		–10 to 60°C (RH 20 to 80%, no condensation)			
Input/ output connector	Gage (counter output)	Connector for counter: RM12BPE-6PH (HIROSE) Compatible receptacle: RM12BRD-6S (HIROSE)			
	Gage (I/O for driving)	Gage side plug: HR10A-7P-6P (HIROSE) Receptacle on motor drive unit: HR10A-7R-6S (HIROSE)			
	Motor drive unit (for external control)	Receptacle on motor drive unit: HR10A-10R-10S (HIROSE) Motor drive unit plug: HR10A-10P-10P (HIROSE)			
Mass (including cables)		Approx. 940g	Approx. 970g	Approx. 940g	Approx. 970g
Standard accessories		Wrench for contact point: **No.04GAA857** Hexagon socket head cap screw, M4×0.7×35, 2 pcs. (for gage fixing) Round flat washer, nominal 4, 2 pcs. (for gage fixing) Motor drive unit: **No.02ADG400**			
Remarks		Motor-driven type			

*1: The speed and measuring force are adjustable on the motor drive unit. Note that the rubber boot type cannot be used in the horizontal position.
*2: IP code is a standard which classifies and rates the degree of protection provided against the intrusion of solid objects and water. This may not be applicable depending on the type of liquid.

DIMENSIONS

Unit: mm

542-313, -333

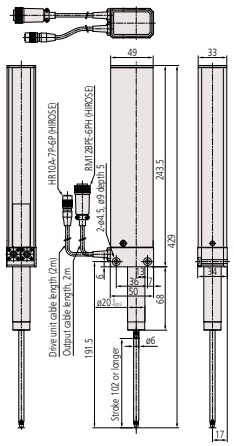

542-315, -335

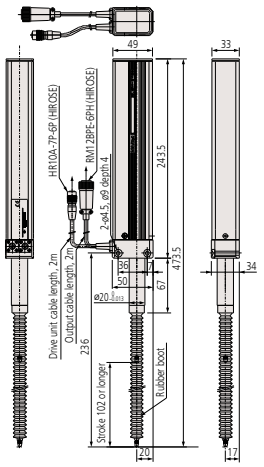

Mitutoyo

Linear Gage LGD – Absolute, Standard Dimensions, Robust

Series 575 — Resolution: 10µm

- Absolute position detection makes it possible to maintain the reference point even when the power is switched off.
- Excellent protection against dust and splashing water (IP66) on the factory floor.
- Ultra-compact design enables installation in very tight spaces.
- The spindle guide uses high-precision linear ball bearings for extremely smooth movement and exceptional durability.
- Sliding durability improved to remain serviceable for at least 15 million cycles (in-house testing).
- Shock resistance, 100g/11ms (IEC 60068-2-27)

575-326 IP66



575-327 IP66



575-328 IP66



SPECIFICATIONS

Order No.*1		575-326	575-327	575-328
Measuring range		.4" / 10mm	1" / 25mm	2" / 50mm
Resolution		.0005" / 10µm		
Measuring accuracy (20°C)		.001" / 20µm		30µm
Quantizing error		±1 count		
Measuring force	Contact point upward	1.0N or less	4.0N or less	4.9N or less
	Contact point horizontal	1.1N or less	4.3N or less	5.3N or less
	Contact point downward	1.2N or less	4.6N or less	5.7N or less
Position detection method		ABSOLUTE electrostatic capacitance-type linear encoder		
Response speed		Unlimited (not applicable to scanning measurement)		
Output		Digimatic output		
External input		Reference-setting signal (Absolute reference position*2) can be changed externally.		
Mass*3		Approx. 260g	Approx. 300g	Approx. 400g
Contact point		ø3mm carbide-tipped (fixing screw: M2.5 (P=0.45)×5), standard contact point No.901312		
Stem dia.		ø8	ø15	
Bearing type		Linear ball bearing		
Dust/water resistance*4		Equivalent to IP66 (only gage head)		
Output cable length (directly extended from the main unit)		2m, 3m, 5m, 7m		
Operating temperature (humidity) range		0 to 40°C (RH 20 to 80%, no condensation)		
Storage temperature(humidity) range		–10 to 60°C (RH 20 to 80%, no condensation)		
Standard Accessories		Wrench for contact point: **No.538610**	Wrench for contact point: **No.04GAA857**	

*1: The last number of the Code No. represents special cable length. (meters)
*2: The absolute reference point is near the lowest rest point at shipment.
*3: Mass including 2m cable.
*4: IP code is a standard which classifies and rates the degree of protection provided against the intrusion of solid objects and water. This may not be applicable depending on the type of liquid.

ABSOLUTE™

Connector

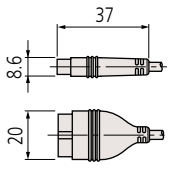

Unit: mm

Optional Accessories

- Air drive unit
  For 10mm range models: **No.02ADE230**
  For 25mm range models: **No.02ADE250**
  For 50mm range models: **No.02ADE270**
  * Required air pressure: 0.2 to 0.4MPa
  * Spindle extends when air is supplied.
- Rubber boot (spare)
  For 10mm range models: **No.238772**
  For 25mm range models: **No.962504**
  For 50mm range models: **No.962505**
- Thrust stem set
  For 10mm range models: **No.02ADB680**
  Thrust stem: **No.02ADB681**
  Clamp nut: **No.02ADB682**
  For 25/50mm range models: **No.02ADN370**
  Thrust stem: **No.02ADN371**
  Clamp nut: **No.02ADB692**
  * External dimensions are described in the dimensional drawing of the product.
  * Thrust stem set is a combination of thrust stem and a clamp nut. A special spanner is required for tightening. If using multiple gages, a thrust stem set for each gage and one special spanner are required.
- Spanner wrench
  For 10mm range models: **No.02ADB683**
  For 25/50mm range models: **No.02ADB693**

SPC cable extension adapter: **02ADF640**
Extension cable (0.5m): **02ADD950**
Extension cable (1m): **936937**
Extension cable (2m): **965014**
*when connecting an extension cable, an SPC cable extension adapter is required (02ADF640)

Digimatic cable extension adapter 02ADF640



Applicable Counters

542-007A	EC-101D Counter, 120V
64PKA132	EG-101D
64PKA135	EB-11D
542-072A	EH-102D
542-064	EV-16D COUNTER

Linear Gage LGD – Absolute, Standard Dimensions, Robust

Series 575 — Resolution: 10µm

DIMENSIONS

Unit: mm

575-326

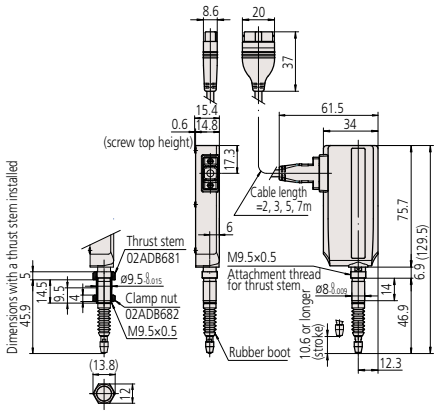

575-328

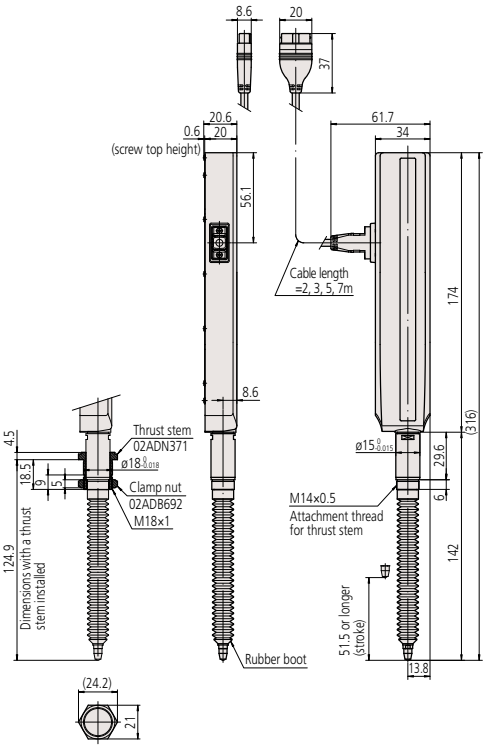

575-327
LGD®-1025L-B, -1025L/3-B, -1025L/5-B, -1025L/7-B

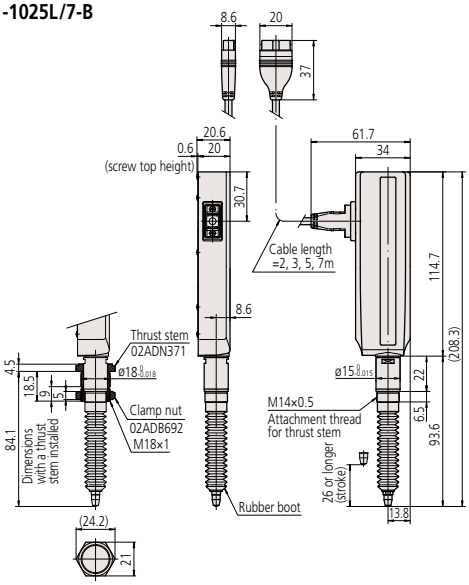

Applicable Counters

542-007A	EC-101D Counter, 120V
64PKA132	EG-101D
64PKA135	EB-11D
542-072A	EH-102D
64PKA138	EV-16D COUNTER

3D models available on request.

Mitutoyo

Linear Gage LGS – Absolute

Series 575 — Resolution: 10µm



- ABSOLUTE electrostatic capacitance-type encoder makes it possible to maintain the reference point even when the power is switched off.
- Excellent protection against dust and splashing water (IP66) on the factory floor.

ABSOLUTE™

SPECIFICATIONS

Metric

Order No.		**575-303**
Measuring range		12.7mm
Resolution		10µm
Measuring accuracy (20°C)		15µm
Quantizing error		±1 count
Measuring force	Contact point upward	1.6N or less
	Contact point horizontal	1.8N or less
	Contact point downward	2N or less
Position detection method		ABSOLUTE electrostatic capacitance-type linear encoder
Response speed		Unlimited (not applicable to scanning measurement)
Output		Digimatic output
Mass		Approx. 190g
Contact point		ø3mm carbide-tipped (fixing screw: M2.5 (P=0.45)×5) Standard contact point **No.901312**
Stem dia.		ø8mm
Bearing type		Slide bearing
Dust/water resistance		Equivalent to IP66 (only gage head)
Output cable length		2m (directly extended from the main unit)
Operating temperature (humidity) range		0 to 40°C (RH 20 to 80%, no condensation)
Storage temperature (humidity) range		–10 to 60°C (RH 20 to 80%, no condensation)

* IP code is a standard which classifies and rates the degree of protection provided against the intrusion of solid objects and water. This may not be applicable depending on the type of liquid.

Inch

Order No.		**575-313**
Measuring range		.5"
Resolution		.0005"
Measuring accuracy (20°C)		.0008"
Quantizing error		±1 count
Measuring force	Contact point upward	1.6N or less
	Contact point horizontal	1.8N or less
	Contact point downward	2N or less
Position detection method		ABSOLUTE electrostatic capacitance-type linear encoder
Response speed		Unlimited (not applicable to scanning measurement)
Output		Digimatic output
Mass		Approx. 190g
Contact point		ø3mm carbide-tipped (fixing screw: M2.5 (P=0.45)×5) Standard contact point **No.901312**
Stem dia.		ø9.52=3/8"
Bearing type		Slide bearing
Dust/water resistance		Equivalent to IP66 (only gage head)
Output cable length		2m (directly extended from the main unit)
Operating temperature (humidity) range		0 to 40°C (RH 20 to 80%, no condensation)
Storage temperature (humidity) range		–10 to 60°C (RH 20 to 80%, no condensation)

* IP code is a standard which classifies and rates the degree of protection provided against the intrusion of solid objects and water. This may not be applicable depending on the type of liquid.

Connector

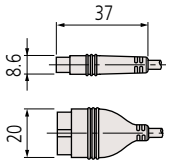

Unit: mm

Optional Accessories

- Rubber boot: **No.238774** (spare)
- Air drive unit (metric): **No.903594**
- Air drive unit (inch): **No.903598**
- SPC cable extension adapter: **No.02ADF640**
- Extension cable (0.5m): **No.02ADD950**
- Extension cable (1m): **No.936937**
- Extension cable (2m): **No.965014**

* When connecting an extension cable, an SPC cable extension adapter is required. **(0ZADF640)**

Digimatic cable extension adapter 02ADF640



Applicable Counters

542-007A	EC-101D Counter, 120V
64PKA132	EG-101D
64PKA135	EB-11D
542-072A	EH-102D
64PKA138	EV-16D COUNTER

DIMENSIONS

Unit: mm

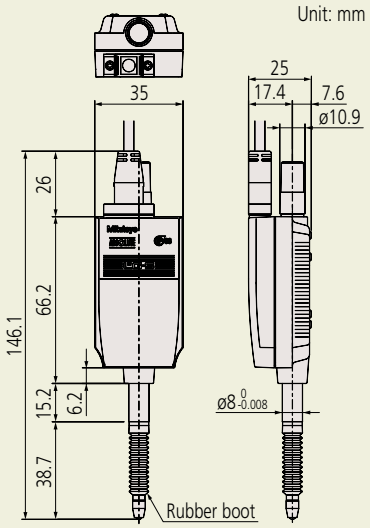

Linear Gage LGF – High Resolution, Standard Dimensions, Robust

Series 542 — Resolution: 0.1 µm

- 0.1µm resolution type of reliable LGF series gage.
- Excellent protection against dust and splashing water (IP66) on the factory floor.

542-181

IP66



542-182

IP66



Connector

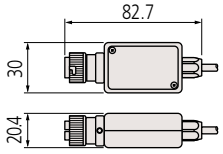

RM12BPE-6PH (HIROSE)

Unit: mm

Optional Accessories

- Rubber boot (spare)
  For 10mm range models: **No.238772**
  For 25mm range models: **No.962504**
  For 50mm range models: **No.962505**
- Thrust stem set
  For 10mm range models: **No.02ADB680**
  Thrust stem: **No.02ADB681**
  Clamp nut: **No.02ADB682**
  For 25mm range models: **No.02ADN370**
  Thrust stem: **No.02ADN371**
  Clamp nut: **No.02ADB692**

* External dimensions are described in the dimensional drawing of the product.

* Thrust stem set is a combination of thrust stem and a clamp nut. A special spanner is required for tightening. If using multiple gages, a thrust stem set for each gage and one special spanner are required.

- Wrench
  For 10mm range models: **No.02ADB683**
  For 25mm range models: **No.02ADB693**
- Extension cable (5m): **902434**
- Extension cable (10m): **902433**
- Extension cable (20m): **902432**
- Air drive unit
  For 10mm range models: **No.02ADE230**
  For 25mm range models: **No.02ADE250**
  For 50mm range models: **No.02ADE270**

* Required air pressure: 0.2 to 0.4MPa

* Spindle extends when air is supplied.

Applicable Counters

542-075A EH-101P
542-071A EH-102P

SPECIFICATIONS

Order No.		542-181	542-182
Measuring range		10mm (.4")	25mm (1")
Resolution		0.1µm (.000005")	
Measuring accuracy (20°C)		(0.8+L/50) µm (L=arbitrary measuring length (mm))	
Quantizing error		±1 count	
Measuring force	Contact point upward	1.0N or less	4.0N or less
	Contact point horizontal	1.1N or less	4.3N or less
	Contact point downward	1.2N or less	4.6N or less
Position detection method		Photoelectric linear encoder	
Response speed*1		400mm/s	
Output signal		90° phase difference, differential squarewave (RS-422A equivalent) Minimum edge-to-edge interval, 200ns	
Output signal pitch		0.4µm	
Mass		Approx. 310g	Approx. 350g
Dust/water resistance*2		Equivalent to IP66 (only gage head)	
Stylus		ø3mm carbide-tipped (fixing screw: M2.5 (P=0.45)×5), standard contact point **No.901312**	
Stem dia.		ø8	ø15
Bearing type		Linear ball bearing	
Output cable length		2m (directly extended from the main unit)	
Connector		Plug: RM12BPE-6PH (HIROSE), Compatible receptacle: RM12BRD-6S (HIROSE)	
Operating temperature (humidity) range		0 to 40°C (RH 20 to 80%, no condensation)	
Storage temperature (humidity) range		–10 to 60°C (RH 20 to 80%, no condensation)	
Standard accessories		Wrench for contact point: **No.538610**	Wrench for contact point: **No.04GAA857**

*1: When the spindle speed exceeds 400mm/s, an alarm will signal. Also, if using a Mitutoyo counter, an error message will be displayed. If using counters made by other companies, please consult your local Mitutoyo office. Note that over-speed error may occur depending on the impact amount when releasing the contact point freely.

*2: IP code is a standard which classifies and rates the degree of protection provided against the intrusion of solid objects and water. This may not be applicable depending on the type of liquid.

DIMENSIONS

Unit: mm

542-181

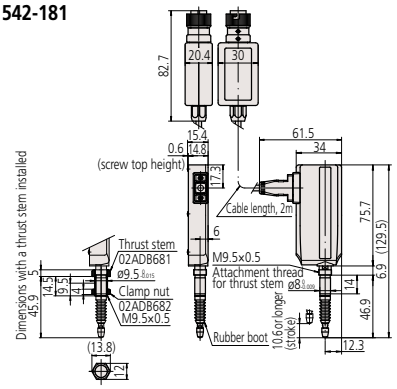

542-182

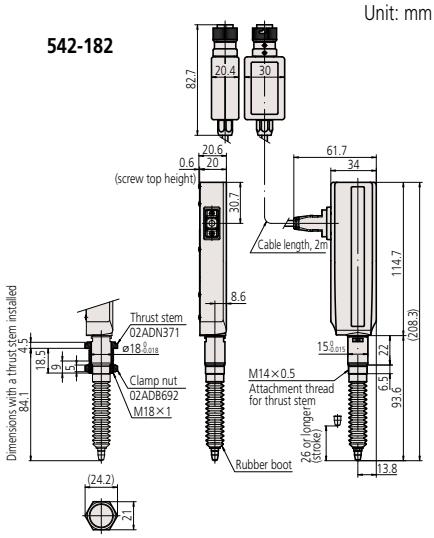

Mitutoyo

Linear Gage LGB2 – High Resolution, Slim, with Clamp Nut

Series 542 (0.1µm resolution)

- Slim type high-precision linear gage with resolution of 0.1µm. It is an optimal choice as a built-in type sensor.
- High-precision linear ball bearings are used in the spindle guide for extremely smooth movement and exceptional durability.

542-246

IP54



Optional Accessories

- Rubber boot: **No.238773** (spare)
- Extension cable (5m): **902434**
- Extension cable (10m): **902433**
- Extension cable (20m): **902432**

Applicable Counters

542-075A	EH-101P
542-071A	EH-102P

SPECIFICATIONS

Order No.		**542-246**	
Measuring range		5mm (.2")	
Resolution		0.1µm (.000005")	
Measuring accuracy (20°C)		0.8µm	
Measuring force	Contact point upward	Approx. 0.55 or less	
	Contact point horizontal	Approx. 0.6N or less	
	Contact point downward	Approx. 0.65 or less	
Output signal		90° phase difference, differential square wave (RS-422A equivalent)	
Position detection method		Photoelectric linear encoder	
Response speed		380mm/s	
Mass		160g	
Dust/water resistance*		Equivalent to IP54 (only gage head)	
Contact point		Carbide ball (M2.5x0.45)	Steel ball (4-48UNF)
Stem dia.		ø9.5mm	
Bearing type		Linear ball bearing	
Output cable length		2m	
Connector		Plug: RM12BPE-6PH (HIROSE), Compatible receptacle: RM12BRD-6S (HIROSE)	
Operating temperature (humidity) range		10 to 30°C (RH 20 to 80%, no condensation)	
Standard accessories		Wrench for contact point: **No.538610**	Wrench for contact point: **No.538610**, Stem bushing

*1: IP code is a standard which classifies and rates the degree of protection provided against the intrusion of solid objects and water. This may not be applicable depending on the type of liquid.

DIMENSIONS

Unit: mm

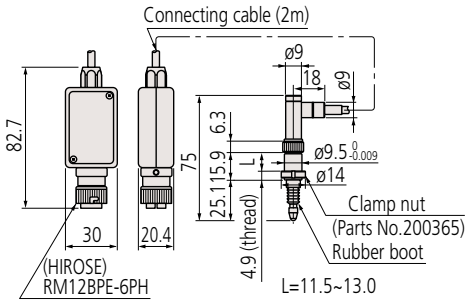

Linear Gage LGH – High Resolution, High Accuracy

SERIES 542 (0.01µm resolution)

- A gage head featuring a very accurate, ultra-high-resolution photoelectric linear encoder that approaches laser interferometer performance over its measuring range of 10mm. This head is suitable for measuring high-precision components and inclusion in high-accuracy positioning applications.
- Relatively long range, very high accuracy and extreme resolution enable the head to act as a master gage for measuring-instrument calibration in many instances.
- The compact design contributes to reducing measuring system costs and permits downsizing entire system configurations.
- Linear encoder is highly resistant to being affected by unfavorable environmental conditions, such as drafts and rapid atmospheric pressure, temperature and humidity changes.
- A low measuring force model is available (**542-716A**). As low as 0.12N can be selected, which enables measurement of easily-deformed workpieces or thickness of delicate films.
- Responsivity has been improved by 2.8 times (250mm/s => 700mm/s) compared to the previous model.
- Every **LGH** series gage is bundled with a dedicated counter.



Gage Head

542-715A



Dedicated Counter

Optional Accessories

- LGH stand: **971750**
- Stem fixture for fixing to top surface: **971751**
- Stem fixture for fixing to bottom surface: **971752**
- Spindle lifting cable: **971753**
- Rubber boot: **238772** (spare for **542-715**)
- I/O output connector (with cover): **02ADB440**

DIMENSIONS

Unit: mm

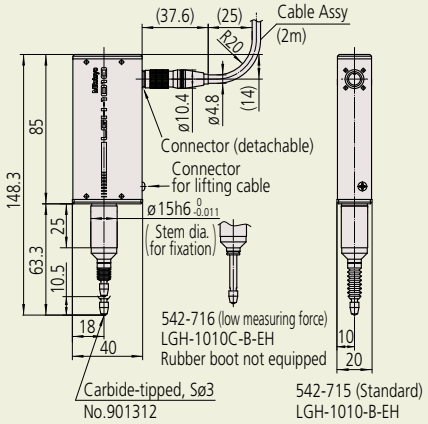

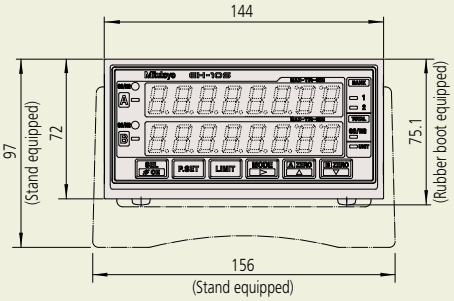

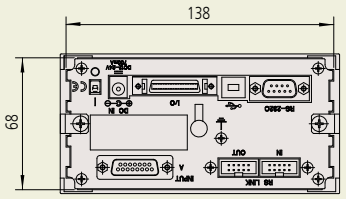

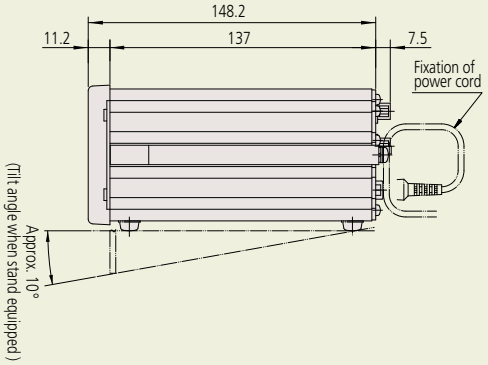

SPECIFICATIONS

Linear gage		Standard	Low measuring force
Order No.		**542-715A**	**542-716A**
Measuring range		10mm	
Resolution		0.01µm (0.05µm, 0.1µm, 0.5µm, 1µm can be selected from the counter)	
Measuring accuracy (20°C)*		0.2µm	
Repeatability (20°C)*		0.1µm (2σ)	
Retrace error (20°C)*		0.1µm	
Measuring force	Contact point downwards	0.65N or less	Approx. 0.12N
	Contact point horizontal	0.55N or less	Not applicable
	Contact point upwards	0.45N or less	Not applicable
Position detection method		Photoelectric reflection type linear encoder	
Detectable operation speed		In normal measurement: 700mm/sec; for peak detection: 120mm/sec	
Mass of gage head		220g (excluding cable of approx. 150g)	
Contact point		ø3mm carbide-tipped (fixing screw: M2.5 (P=0.45)×5)	
Stem		ø15mm	
Bearing		Linear ball type	
Output cable length		Approx. 2m	
Operating temperature/humidity		0 to 40°C/RH 20 to 80% (no condensation)	
Storage temperature		-10 to 60°C/RH 20 to 80% (no condensation)	
Counter			
Quantizing error		±1 count	
Display range		±999.99999mm	
Functions		Presetting, tolerance judgment, peak measurement, analog output	
Interface		RS-232C/Digimatic/USB (only for SENSORPAK)	
Power supply		Supplied AC Adapter, or +12 to 24 V DC, max. 700mA	
Current Consumption		8.4W (MAX 700mA) (Ensure at least 1A power supply per unit.)	
External dimensions		144(W)×157(D)×75(H)	
Mass		Approx. 900g (AC Adapter excluded)	
Standard accessories		Wrench for contact point, rubber boot, stand, washer (for counter), AC Adapter, AC cord, DC plug, user's manual, inspection certificate	

*Indication accuracy applies when used with counters.

Laser Hologage LGH – High Resolution, High Accuracy

Series 542 — Resolution: 0.01µm

- The Mitutoyo Laser Hologage is a high-end digital gaging system that employs laser beam interference to make highly accurate and repeatable measurements.
- The compact gage head reduces the cost required for assembling the laser scale unit for each device. The head can also contribute to downsizing the entire system. The master gage is the best tool available for measuring tools or for a length measurement sensor of the control unit, as well as for measuring high-precision components.
- High resolution and high accuracy.
  Highly accurate measurement due to an ultra-high resolution of 0.00001mm (0.01µm), which is close to the performance of laser interferometers.
- Excellent measuring stability.
  The design is also highly resistant to unfavorable environmental conditions such as air movement and atmospheric pressure changes.
- Low measuring force models are also available.
  Low measuring force models are available for easily deformed precision workpieces.
- High reliability and excellent durability.
  High-precision linear ball bearings are used in the spindle guide for extremely smooth movement and exceptional durability.
- 0.01µm resolution LGH is for use with counter EH-102S.



LGH-110



EH-102S

SPECIFICATIONS

Code No.		542-925A	542-927A	542-926A	542-928A
Configuration		Set of 1-axis gage head and display unit	Set of 2-axis gage head and display unit	Set of 1-axis gage head and display unit	Set of 2-axis gage head and display unit
Measuring range		10mm			
Resolution		0.01µm (.5 microinch)			
Measuring accuracy (20°C)		0.1µm*1			
Repeatability (2σ)		0.02µm			
Retrace error		0.05µm			
Measuring force	Contact point upward	Approx. 0.35N or less		Approx. 0.1N	
	Contact point horizontal	Approx. 0.45N or less		—	
	Contact point downward	Approx. 0.55N or less		—	
Stylus		ø3mm carbide-tipped (fixing screw: M2.5 (P=0.45)×5), standard contact point No.120058			
Output cable length		2m			
Display range		±999.99999mm			
Minimum reading		0.01µm			
Operating temperature (humidity) range		10 to 30°C (RH 30 to 70%, no condensation)			
Storage temperature (humidity) range		–10 to 50°C (RH 30 to 70%, no condensation) The temperature and humidity range for storage after unpacking is the same as that for operation.			
Standard accessories		Wrench for contact point: **No.538610** AC adapter: **No.02ADN460** AC cable (USA): **No.02ZAA010***			
Mass (gage head + display unit)		1400g			

*1: Indication accuracy applies when used with counters.

Laser Beam Safety Precautions

This system uses a low-power invisible laser beam (780nm) which corresponds to a CLASS 1 (invisible radiation) of IEC60825-1 for measurement. The CLASS 1 laser warning label as shown below is attached to the main unit.

CLASS 1 LASER PRODUCT

PROPRIETARY INSPECTION CERTIFICATE

Mitutoyo guarantees the product specifications. Mitutoyo guarantees the product specifications.

Optional Accessories

- Laser hologage stand: **No.971750**
- Stem fixture for fixing to top surface: **No.971751**
- Stem fixture for fixing to bottom surface: **No.971752**
- Spindle lifting cable: **No.971753**
- Rubber boot: **No.238772** (spare)

DIMENSIONS

Unit: mm

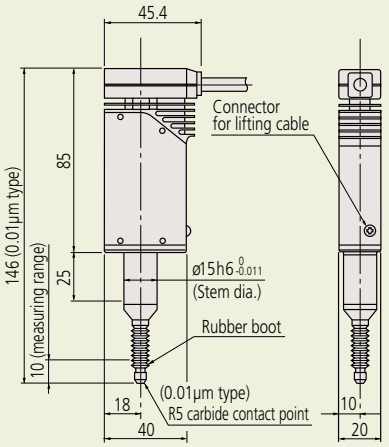

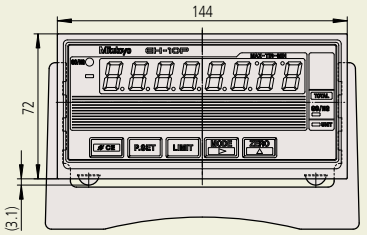

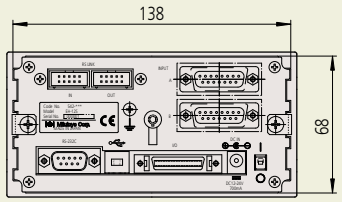

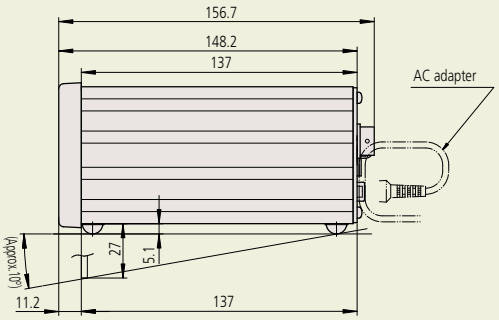

EH Counter – Multi-function Type

Series 542 — Versatile, Multi-function Displays for all Linear Gage Formats

Optional Accessories

• I/O output connector (with cover): **No.02ADB440**

- Two types are available for this model: a 1-axis display and a 2-axis display, which enables addition or subtraction calculations between two gages.
- Multifunctional counter equipped with zero-setting, presetting and tolerance judgment.
- RS-232C and USB are equipped as standard. Data transfer to a PC is possible. (*USB is supported only by Mitutoyo SENSORPAK.)
- A multi-point (max. 12 points) measuring system can easily be configured with the built-in RS link networking function. Refer to "Quick Guide to Precision Measuring Instruments" on page G-32 for details of the RS link.
- Employs DIN size (144x72mm) and mount-on-panel configuration to facilitate system integration.



SPECIFICATIONS

Order No.		542-075A	542-071A	542-073A	542-074A	542-072A
Applicable gage head		**LGE**, **LGF**, **LGK**, **LGB**, **LGM**, **LG**, **LGH** (not compatible with LGH-110, reference point, or sine wave models)		**LGF** with reference point mark	**LGB** sine wave output / Linear scale sine wave output	**LGD**, **LGS**, **ID**, **SD**
Number of gage inputs		1	2			
Number of axes to be displayed		1 axis	2 axes			
Quantizing error		±1 count				
Maximum input frequency		2.5MHz (2-phase square wave)			1MHz (2-phase sine wave)	—
Resolution		0.01mm (±9999.99mm) / .0005" (±99.9995") 0.001mm (±999.999mm) / .00005" (±9.99995") 0.0001mm (±99.9999mm) / .000005" (±.999995") [Parameter set]				Automatic setting by gage
		—			0.01 / 0.001µm	
Display		Sign plus 8 digits (Green LED)				
Tolerance judgment display		LED display (3 steps: Amber, Green, Red/ 5 steps: Amber, Amber flashing, Green, Red flashing, Red)				
Interface		RS-232C/USB/parameter selection via digimatic (only DP-1VR, digimatic mini-processor can be connected) (USB used only with SENSORPAK.) Selection by parameter from 3-step, 5-step, or digit BCD Total tolerance judgment output (when tolerance function is enabled) Analog output (1V-4V)				
Input/output	Control output	Normal operation signal (NOM): open collector				
	Control input	Display BANK switching, peak mode, presetting, display hold, hold per axis: open-collector or no-voltage contact signal (with/without contact point)				
Rating	Power supply voltage	Supplied AC adapter, or 12 - 24V DC				
	Power consumption	8.4W (max. 700mA) Ensure at least 1A is available per unit.				
Operating temperature (humidity) range		0 to 40°C (RH 20 to 80%, no condensation)				
Storage temperature (humidity) range		–10 to 50°C (RH 20 to 80%, no condensation)				
External dimensions		144 (W) ×72 (H) ×156.7 (D) mm				
AC adapter / AC cable (standard accessory)		AC adapter: **No.02ADN460** / AC cable (USA): **No.02ZAA010***,				
Applicable input		Differential square-wave			Differential sine-wave	Digimatic code output
Mass		Approx. 760g	Approx. 800g	Approx. 800g	Approx. 900g	Approx. 800g

DIMENSIONS

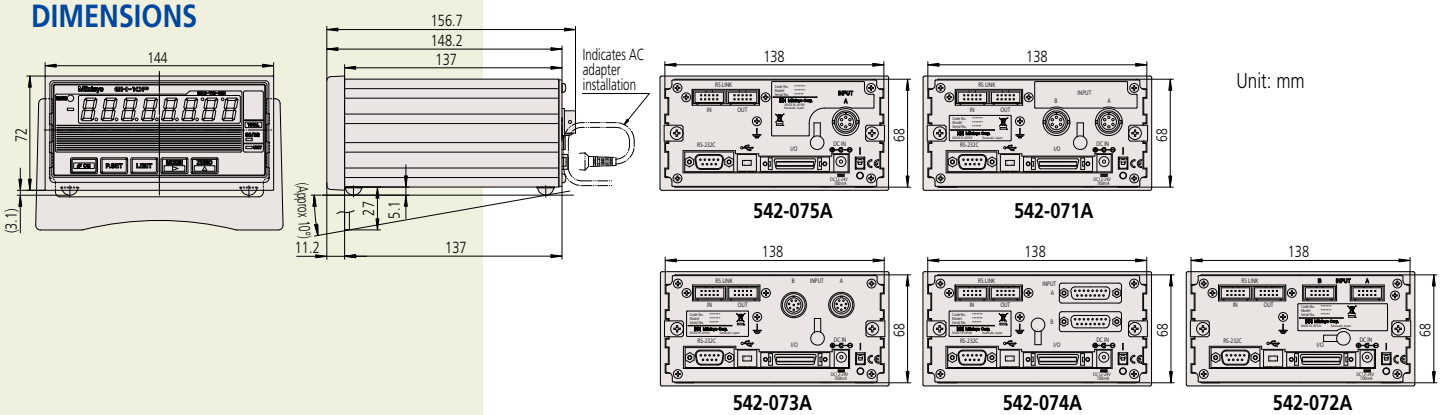

Unit: mm

Mitutoyo

EC Counter – Single-function Type

Series 542 — Simple Display for LGD, LGS, or other Digimatic Gages, Go/NG Judgment and Output

- Produces 3-step/5-step, 3 types of tolerance output and BCD output.
- Employs DIN size (96×48mm) and mount-on-panel configuration to facilitate system integration.



542-007A



Function

- Preset
- Tolerance judgment (3/5-step, 3 types)
- Zero

Optional Accessories

- Connecting cable for digimatic mini-processor: **No.936937** (1m), **No.965014** (2m)
- DC plug PJ-2: **No.214938**
- I/O cable (2m): **No.C162-155**

SPECIFICATIONS

Order No.		**542-007A**
Applicable head/input		**LGD**, **LGS**, **ID**, **SD,** Digimatic code (SPC)
Number of gage inputs		1
Resolution		0.01mm (±9999.99) / .0005" (±99.9995") / .001" (±999.999") 0.001mm (±9999.999) / .00005" (±9.99995") / .0001" (±99.999") [automatic setting by gage]
Display		Sign plus 6 digits (Green LED)
Tolerance judgment display		LED display (3 steps: Amber, Green, Red)
External output (switching type)	Tolerance judgment output	Go/No-Go (open-collector)
	Data output	Digimatic output
Control input		External PRESET, external HOLD
Rating	Power supply voltage	Supplied AC adapter, or 9 - 12V DC
	Power consumption	4.8W (max. 400mA) Ensure at least 1A is available per unit.
Operation/storage temperature range		Operation: 0 - 40°C / Storage: –10 to 50°C
External dimensions		96 (W) x 48 (H) x 84.6 (D) mm
Standard accessories		AC adapter: **No.06AEG302JA**
Mass		220g

DIMENSIONS

Unit: mm

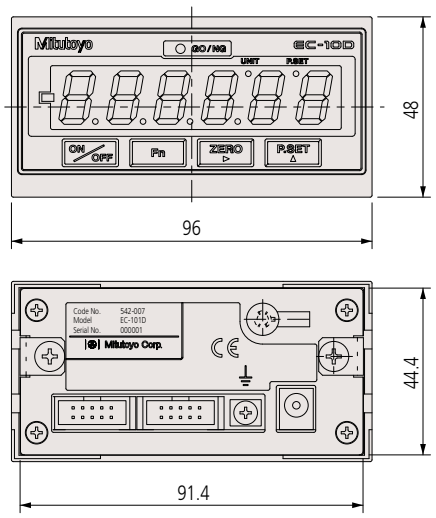

EG Counter – Single-function Type

Series 542 — Simple Display, Multi-Step Go/No Go Judgment and Output, BCD Output, Open Collector

Function

- Preset
- Direction switch
- Tolerance judgment (3/5-step, 3 kinds)
- Peak (max., min., runout) measurement
- Constant number
- Smoothing
- Error display/output
- Key protection

Optional Accessories

- I/O output connector (with cover): **No.02ADB440**
- AC adapter: **No.02ADN460***
- AC cable (USA): **02ZAA010***
- Terminal connecting cable: **No.02ADD930***

* Included in package Order No.

- Produces 3-step/5-step, 7 types of tolerance output and limit value output independently for each of 7 channels.
- Comes with serial BCD output capability, for connection to a programmable controller or personal computer, etc.
- Employs DIN size (96×48mm) and mount-on-panel configuration to facilitate system integration.



542-015



542-017



542-016

SPECIFICATIONS

Order No. (counter only)		542-015	542-017	542-016
Package No. (counter w/AC adapter)		64PKA131	64PKA133	64PKA132
Applicable gage head		**LGE**, **LGF**, **LGK**, **LGB**, **LGM**, **LG**, **LGH** (Not compatible with LGH110, reference point or sine wave models)	**LGF** with reference point mark **(LGF-Z)**	**LGD**, **LGS**, **ID**, **SD**
Number of gage inputs		1		
Quantizing error		±1 count		
Maximum input frequency		1.25MHz, response speed depends on gage specification.		—
Resolution		0.01mm (±9999.99mm) / .0005" (±99.9995") / .001" (±999.999") 0.005mm (±9999.995mm) / .00005" (±9.99995") / .0001" (±99.999") 0.001mm (±999.999mm) / .00005" (±9.99995") / .0001"(±99.999") 0.0005mm (±99.9995mm) / .000005" (±.999995") / .00001" (±9.99999") 0.0001mm (±99.9999mm) / .000005" (±.999995") / .00001" (±9.99999")		0.01mm (±9999.99mm) / .0005" (±99.9995") / .001" (±999.999") 0.001mm (±999.999mm) / .00005" (±9.99995") / .0001" (±99.999") [Automatic setting by gage]
Display		Sign plus 6 digits (Green LED)		
Tolerance judgment display		LED display (3 steps: Amber, Green, Red/ 5 steps: Amber, Amber flashing, Green, Red flashing, Red)		
Tolerance judgment output		L1 to L5 (Open-collector / Switchover between L1 to L5 and BCD output with parameter)		
Control output		Normal operation signal (NOM): open-collector		
BCD output		Open-collector / Switchover between 6-digit (positive/negative-true logic) and tolerance judgment output with parameter		
Control input		Presetting, display hold, peak value clear, tolerance judgment BANK switch		
Rating	Power supply voltage	12 - 24V DC		
	Power consumption	6W or less (500mA max.) Ensure at least 1A is available per unit.		
Operating temperature range		0 to 40°C (RH 20 to 80%, no condensation)		
Storage temperature range		–10 to 50°C (RH 20 to 80%, no condensation)		
External dimensions		96 (W) × 48 (H) × 156 (D) mm		
Applicable input		Differential square-wave	Differential square-wave with origin point mark	Digimatic code (SPC)
Number of gage inputs		1		
Mass		Approx. 400g		

DIMENSIONS

Unit: mm

542-015
EG-101P

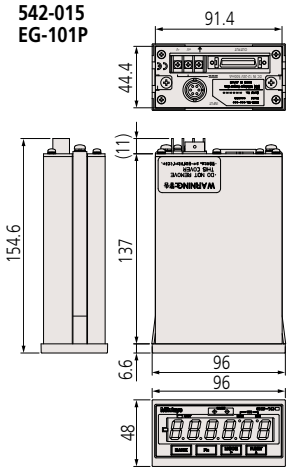

542-017
EG-101Z

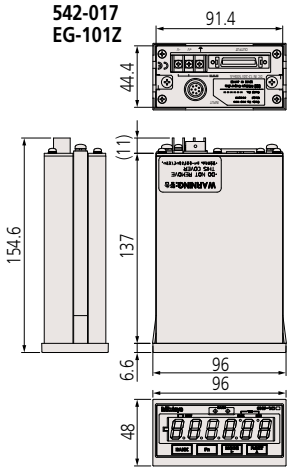

542-016
EG-101D

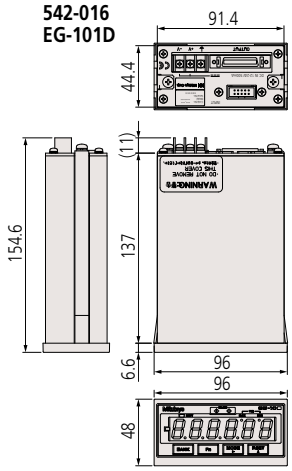

Mitutoyo

EB Counter – Single-function Type

Series 542 — Simple Display, Multi-Step Go/No-Go Judgment, BCD Output and Analog Output

- Produces 3-step/5-step, 7 types of tolerance output and limit value output independently for each of 7 channels.
- Comes with serial BCD output capability, for connection to a programmable controller or personal computer, etc.
- Dynamic measurement possible with simplified analog output.
- Employs DIN size (96×48mm) and mount-on-panel configuration to facilitate system integration.



542-092-2



542-094-2



542-093-2

SPECIFICATIONS

Order No. (counter only)		542-092-2	542-094-2	542-093-2
Package No. (counter w/AC Adapter)		64PKA134	64PKA136	64PKA135
Applicable gage head		**LGF**, **LGK**, **LGE**, **LGB** (not compatible with reference point or sine wave output type models)	**LGF** with reference point mark **(LGF-Z)**	**LGS**, **LGD**, **LGD-M**
Number of gage inputs		1		
Quantizing error		±1 count		
Maximum input frequency		1.25MHz (2-phase square wave), response speed depends on gage specification.		Response speed depends on gage specification.
Resolution		0.01mm (±9999.99mm) / .0005" (±99.9995") 0.005mm (±9999.995mm) / .00005" (±9.99995") 0.001mm (±999.999mm) / .00005" (±9.99995") 0.0005mm (±99.9995mm) / .000005" (±.999995") 0.0001mm (±99.9999mm) / .000005" (±.999995")		0.01mm (±9999.99mm) / .0005" (±99.9995") 0.005mm (±9999.995mm) / .00005" (±9.99995") 0.001mm (±999.999mm) / .00005" (±9.99995") 0.0005mm (±99.9995mm) / .000005" (±.999995") 0.0001mm (±99.9999 mm) / .000005" (±.999995")
Display		Sign plus 6 digits (Green LED)		
Tolerance judgment display		LED display (3 steps: Amber, Green, Red / 5 steps: Amber, Amber flashing, Green, Red flashing, Red)		
Input/ output	Tolerance judgment output	L1 to L5, open-collector		
	Control output	Normal operation signal (NOM), open-collector		
	Control input	Presetting, display hold, peak value clear, tolerance judgment BANK switch, open-collector or no-voltage contact signal (with/without contact point)		
Interface	Serial BCD	Bit serial format, open-collector		
	Analog output	2.5V+Counting value× Voltage resolution (25mV/2.5mV): Full-scale 0 to 5V		
	Digimatic input/output	• Connecting to the external switch box (**No.02ADF180**) makes it easy to enter tolerance limits and preset values. Note: This function is not available when the gage is connected to **DP-1VR**, Digimatic Mini-Processor. • It can only be connected to **DP-1VR** Digimatic Mini-Processor (**No.264-504-5A**). • Number of tolerance steps can be expanded by assembling **EB-D** counters.		
Rating	Power supply voltage	12 - 24V DC		
	Power consumption	6W or less (50mA max.) Ensure at least 1A is available per unit.		
Operating temperature range		0 to 40°C (RH 20 to 80%, no condensation)/ –10 to 50°C (RH 20 to 80%, no condensation)		
External dimensions		96(W)×48(H)×156(D)mm		
Applicable input		Differential square-wave	Differential square-wave with origin point mark	Digimatic code (SPC)
Mass		Approx. 400g	Approx. 400g	Approx. 400g

DIMENSIONS

Unit: mm

542-092-2
EB-11P

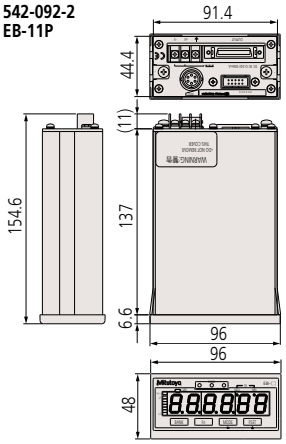

542-094-2
EB-11Z

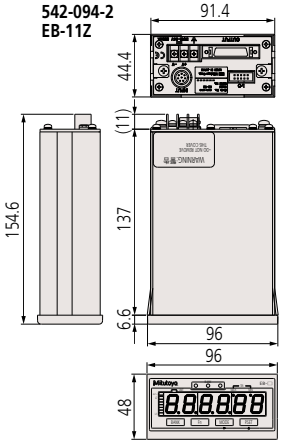

542-093-2
EB-11D

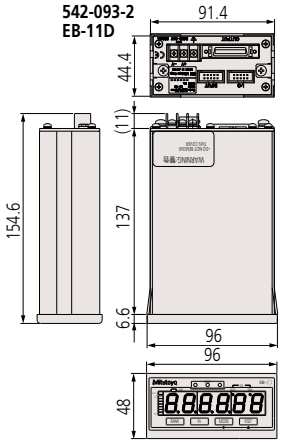

Function

- Preset
- Tolerance judgment output (3/5-step, 7 types)
- Limit value output (2 types independently for each of the 7 channels)
- Peak (max., min., runout) measurement
- Diverse data output

(Serial BCD, Simplified analog, Digimatic)

Optional Accessories

- I/O output connector (with cover): **No.02ADB440**
- AC adapter: **No.02ADN460***
- AC cable (USA): **02ZAA010***
- Terminal connecting cable: **No.02ADD930***

* Included in package Order No.

The tolerance values or preset values can be easily input.
No.02ADF180 (with 2m cable)



EV Counter – Multi-function, Multiple Input Type

Series 542 — Processor (Optional Display), Multi-function/output

- Up to six gages can be connected to one unit, extendable up to 10 units (60 gages at maximum) using the RS Link function* to facilitate the configuration of a multi-point measurement system.

* Refer to "Quick Guide to Precision Measuring Instruments" on page G-32 for details of the RS link.

- A range of output modes to choose from: I/O output for tolerance judgment and segment output, BCD data output and RS-232C output are available.
- Other than normal measurement, peak measurement or differential measurement between gages are available.



542-063



542-067



542-064

Function

- External Control (Zero-set, Preset etc.)
- Direction switch
- Error display
- Tolerance judgment output
- Diverse data output (RS-232C, BCD, Segment)
- Peak measurement

Maximum value, minimum value, runout, and differential measurement between two gages
Addition, averaging, maximum value, minimum value, and maximum width

Optional Accessories

- D-EV External display unit: **No.02ADD400**
- SPC cable (0.5m): **No.02ADD950**
- SPC cable (1m): **No.936937**
- SPC cable (2m): **No.965014**
- AC adapter: **No.02ADN460***
- AC cable (USA): **02ZAA010***
- Terminal connecting cable: **No.02ADD930***

* Included in package Order No.

SPECIFICATIONS

Order No.		**542-063**	**542-067**	**542-064**
Pkg No.(counter w/AC adapter)		**64PKA137**	**64PKA139**	**64PKA138**
Applicable gage head		**LGE**, **LGF**, **LGK**, **LGB**, **LGM**, **LG** not compatible with reference point mark, sine wave output type or 0.1µm resolution models.	**LGF** with reference point mark **(LGF-Z)**	**LGD**, **LGS**
Number of input channels		6		
Maximum input frequency		1.25MHz (2-phase square wave), response speed depends on gage specification. Max. counting speed: 5MHz	1.25MHz (2-phase square wave), response speed depends on gage specification. Max. counting speed: 5MHz	Response speed depends on gage specification.
Quantizing error		±1 count		
Resolution		10µm (±999999.99mm) / .0005" (±9999.9995") 5µm (±999999.995mm) / .00005" (±999.99995") 0.5µm (±9999.9995mm) / .000005" (±.99.999995")*1 [Parameter set]	10µm (±999999.99mm) / .0005" (±9999.9995") 5µm (±999999.995mm) / .00005" (±999.99995") 1µm (±99999.999mm) / .00005" (±999.99995") 0.5µm (±9999.9995mm) / .000005" (±.99.999995") [Parameter set]	Depends on gage specification.
LED display		8 digits for parameter display (displays settings), 1 for error display		
Error message		Overspeed, gage error etc.		
External display		Dedicated external display unit D-EV (optional) can be connected.		
Number of input switches		4		
Function of input switches		Measurement mode switching, parameter setting		
Input/ output	Tolerance judgment output	1 to 6 channels (L1, L2, L3), open-collector		
	BCD output	Parallel BCD output (positive/negative-true logic), open-collector		
	Segment output	Function to set on only the terminals corresponding to the counting values, open-collector		
	Control output	Normal operation signal (NOM), open-collector		
	Control input	Output channel designation (segment, in the BCD mode), presetting, peak value clear, range changeover (at segment output), holding counting value open-collector or no-voltage contact signal (with/without contact point)		
Interface	RS-232C	Measurement data output and control input EIA RS-232C-compatible Use cross cables for home position, DTE (terminal definition).		
	RS link	Max. connecting unit: 10 (6 when using EF counter) Connecting cable length: Max. 10m (sum of link cable length) Data transfer time: 1sec./60ch (when transmission rate is 19200bps)		
Rating	Power supply voltage	12 - 24V DC, terminal block (M3 screw)		
	Power consumption	8.4W or less (700mA max.) Ensure at least 1A is available per unit.		
Operating temperature (humidity) range		0 to 40°C (RH 20 to 80%, no condensation)		
Storage temperature (humidity) range		–10 to 50°C (RH 20 to 80%, no condensation)		
External dimensions		144 (W) x 72 (H) x139 (D) mm		
Mass		Approx. 910g	Approx. 910g	Approx. 830g
Standard accessories		Fixing foot (4), connecting bracket (4), fixing screw M4×12 (8)		
Applicable input		Differential square-wave		Digimatic code (SPC)

*1: Available when using D-EV.
*2: D-EV is required when selecting 0.1µm resolution.

Mitutoyo

EV Counter System Configuration

Series 542 — Processor (Optional Display), Multi-function/output

System Configuration

A counter system performs output and display for connected Mitutoyo linear gages.

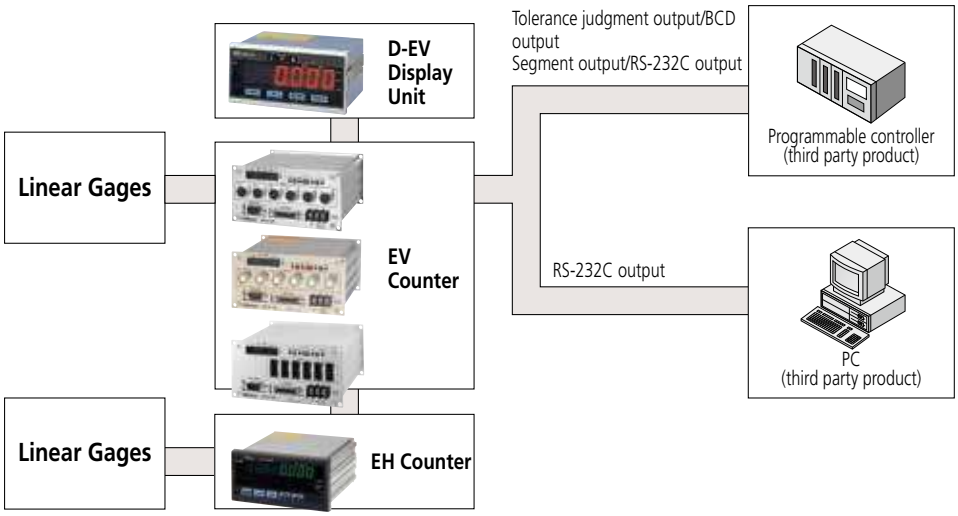

DIMENSIONS

Unit: mm

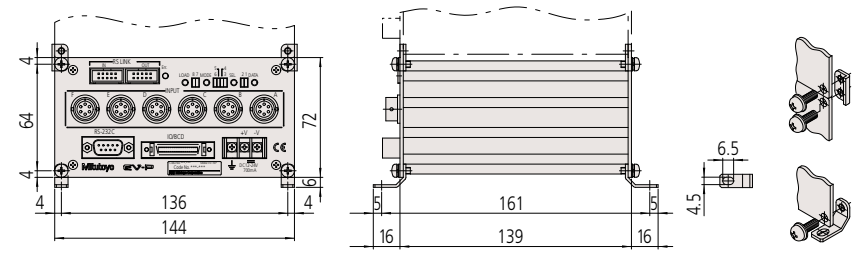

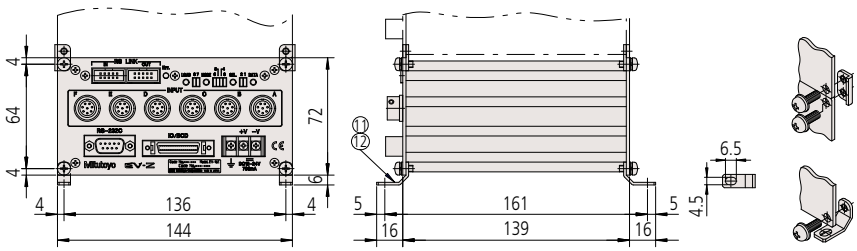

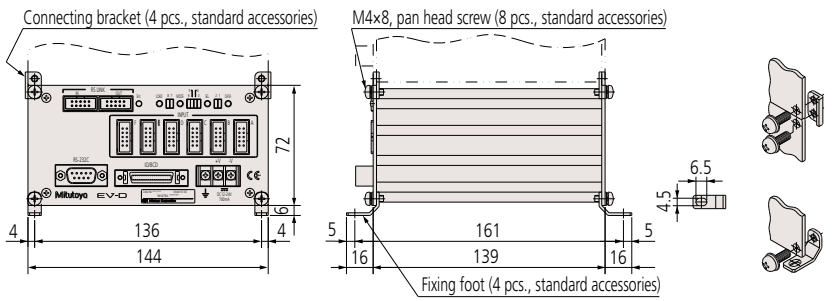

D-EV Display Unit for EV Counter

- Display unit for the EV counter.
- Allows set up of EV counter without a personal computer or other equipment.
- Able to display each gage measurement value and go/no-go judgment result, total go/no-go judgment result for all gages, setting details and errors.



02ADD400

Function

- External Control (Zero-set, Preset etc.)
- Direction switch
- Error display
- Tolerance judgment output
- Data output
  (RS-232C, BCD, Segment)
- Peak measurement

Maximum value, minimum value, runout, and differential measurement between two gages
Addition, averaging, maximum value, minimum value, and maximum width

Optional Accessories

- SPC cable (0.5m): **No.02ADD950***1
- SPC cable (1mm): **No.936937***1
- SPC cable (2m): **No.965014***1
- AC adapter: **No.02ADN460**
- AC cable (USA): **02ZAA010***2
- Terminal connecting cable: **02ADD930***2

*1: Required when connecting with **EV-16P/D/Z**.
*2: Required when using AC adapter.
Note: AC adapters may not be needed if using power from EV counter to power the D-EV.

SPECIFICATIONS

Order No.	**02ADD400**
Number of connections	1 EV counter per unit
Number of digits	Sign plus 6 digits (8 digits internal to EV counter)
LED	Channel display (also for judgment result display): 3 (3-color LED) Measurement mode display (current data, maximum value, minimum value, runout): 2 Status display: 1 (2 colors)
Operation switches	4
Function of operation switch	Channel switching, measurement mode switching (current data, maximum value, minimum value, runout), parameter setting, presetting, tolerance setting
Input/output	RS Link connectors: 1 each for IN, OUT
Error message	Overspeed, gage error etc.
Power supply	Terminal block (M3 screw), 12 - 24V DC, 200mA
Operating temperature (humidity) range	0 to 40°C (RH 20 to 80%, no condensation)
Storage temperature(humidity) range	–10 to 50°C (RH 20 to 80%, no condensation)
External dimensions	96(W)×48(H)×84.6(D)mm

DIMENSIONS

Unit: mm

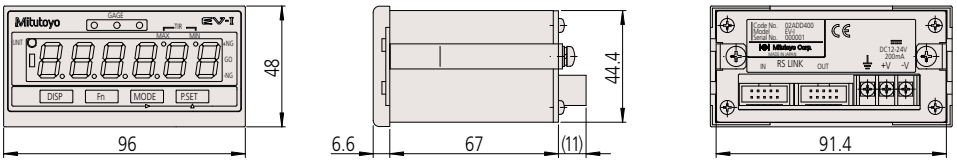

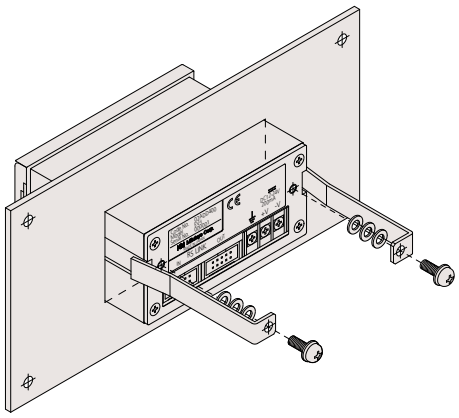

Sensorpak Software

Dynamically Displays Positions, Tolerances and Calculations, and Acquires Basic Data from EH, EV Counters and Litematics

- This software facilitates loading measurement data onto a personal computer from a linear gage counter with RS-232C output (EH, EV), with USB output (EH), or from a Litematic display (VL).
- 60 channels (max.) of measurement data can be processed.
- Arithmetical calculations and maximum width calculations can be performed using the measurement data.
- Exporting measurement data into MS-Excel format is supported.
- Real-time graphical display by means of bar-graph or meter is provided.
- Any gage that can be connected to an EH or EV counter can be used in Sensorpak.

MiCAT
Mitutoyo Intelligent Computer Aided Technology
the standard in world metrology software
SENSOR

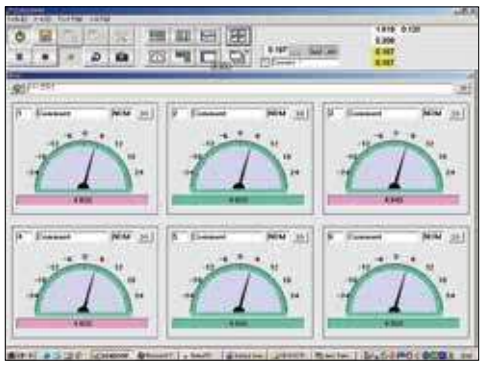

Meter screen

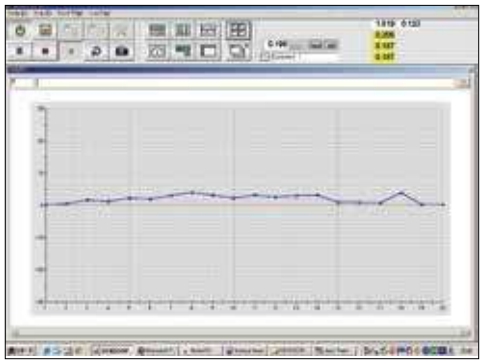

Chart screen

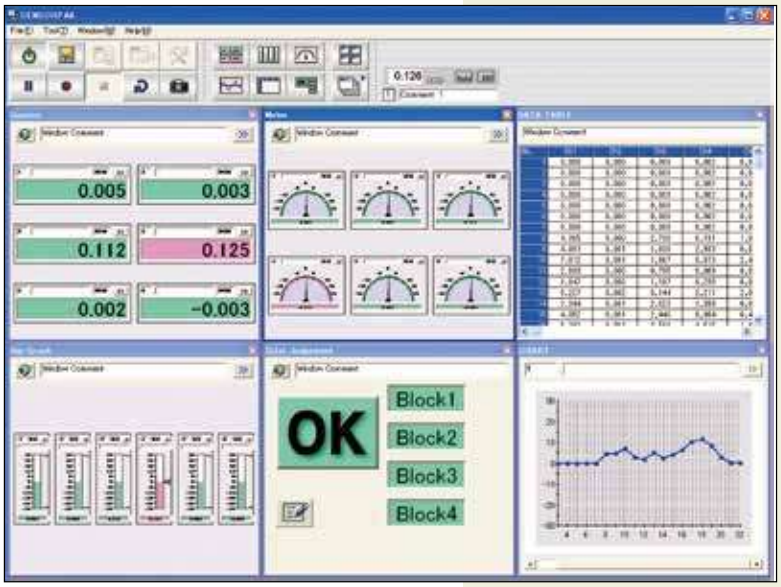

Measurement screen

SPECIFICATIONS

Order No.	**02NGB073** (Software v 3.0 plus I/O cable)
Display function	Display type: Counter, bar graph, meter, chart (capable of simultaneous display) Tolerance judgment result: Color display (green/red) Connectable gages: max. 60 gages
Calculation functions	Calculation items: Sum, difference, total, average, maximum, minimum, range (maximum–minimum), calculation with a constant Connectable gages: Max. 30 calculation functions (between two gages)
Total tolerance judgment	Go/No-go judgment (by specifying gages to be used for total tolerance judgment) Go/No-go signal output with optional I/O cable
Input function	Trigger function: by means of key, timer or external TRG (with optional I/O cable) Data input frequency: Max. 9999 times (with 60 gages connected) to 60000 times (with 6 gages connected)
Output function	Direct output to EXCEL spreadsheet, CSV file output (compatible with MeasurLink)
Connectable items	EF, EH, EV, Litematic (RS Link ready products)
System requirements	CPU: DOS/V PC, 2GHZ or more OS: Windows 7 (32/64 bit), 8.1 (32/64 bit) Memory: 2 GB or more Display: 1024 x 786 or more Excel: 2007, 2010, 2013

Currently supported languages: English, German, French, Spanish
User's manual: English

Optional Stand for VL-50S-B

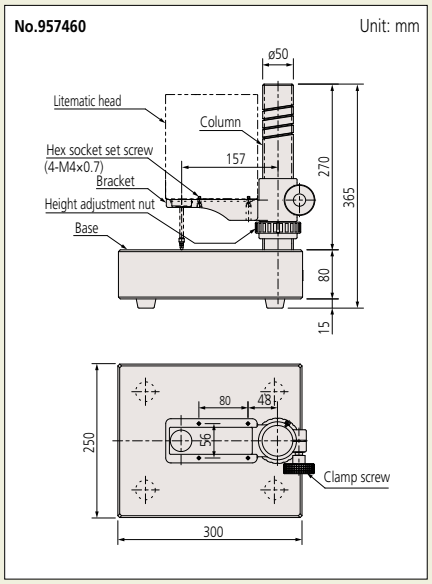

Optional Accessories

- Foot switch: **No.937179T**
- Dedicated stand: **No.957460***4
- SPC cable (1m): **No.936937***5
- SPC cable (2m): **No.965014***5
- Weight set: **No.02AZE375***6
- Recommended contact point:
  Shell type
  Carbide-tipped spherical contact point, ø7.5
  Carbide-tipped spherical contact point, ø10.5
  Carbide-tipped needle contact point, ø0.45

*4: Only available for **VL-50S** models
*5: Refer to page G-32 for details of the RS link.
*6: Not applicable to **VL-50-100-B**, **VL-50S-100-B**.

Measurement Examples



Glass dimensional measurement



Thin sheet metal thickness

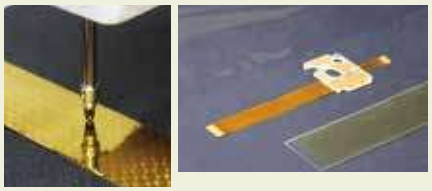

Thickness measurement of non-metallic sheet

Laser Beam Safety Precautions

This system uses a low-power invisible laser beam (780nm) which corresponds to a CLASS 1 (invisible radiation) of IEC60825-1 for measurement. The CLASS 1 laser warning label as shown below is attached to the main unit.

CLASS 1 LASER PRODUCT

Litematic – Low-Force Measurement

Series 318 — Low Force, High-resolution, Motorized Measurement of Easily-deformed Parts

- The Litematic is designed for measuring easily deformed workpieces and high-precision parts, with extra-low measuring force of 0.01N.
- 0.15N and 1N types are capable of measuring at a certain measuring force by using a Litematic feature, while the 0.01N type is suitable for measuring delicate workpieces.

*0.15N, 1N types are factory-installed option.

- The motor-driven spindle moves up/down and stops when the contact point touches the workpiece. Then the maximum, minimum values and runout value are measured under a constant force.
- High resolution of 0.01µm, and wide measuring range of 50mm.
- Measuring system VL-50-B, integrated display type, and VL-50S-B, a separate display type, are available.
- The measuring table supplied with VL-50-B is ceramic and corrosion-free for easier maintenance and storage.
- The spindle is made of low thermal-expansion material.



318-221A



318-226A

SPECIFICATIONS

Order No.		318-221A	318-222A	318-223A	318-226A	318-227A	318-228A
Model		VL-50-B	VL-50-15-B	VL-50-100-B	VL-50S-B	VL-50S-15-B	VL-50S-100-B
Measuring range		0 to 50mm (0-2")					
Resolution		0.01/0.1/1.0µm (.0000005"/.000005"/.00005")					
Display unit		8 digits/14mm (.6") character height (without signs)					
Detection method		Reflection-type linear encoder					
Stroke		51.5mm (.2") (when using a standard contact point)					
Indication accuracy (20°C)*1		(0.5+L/100)µm L=arbitrary measuring length (mm)					
Accuracy guaranteed temperature*2		20 ± 1°C					
Repeatability*1		σ=0.05µm					
Measuring force*1		0.01	0.15N*3	1N*3	0.01N	0.15N*3	1N*3
Feed speed	Measurement	Approx. 2mm/s (.08"/s) or 4mm/s (.16"/s) (changeable by parameter)					
	Fast feed	Approx. 8mm/s (.3"/s)					
Standard contact point		ø3mm carbide tipped (fixing screw: M2.5 (P=0.45)x5) **No.901312**					
Measuring table		ø100 (ceramic, grooved, removable)			—		
Input		Foot switch input (when optional foot switch is used) External control					
Output		Digimatic output/RS-232C output (changeable by parameter)					
Rating	Power supply	85 - 264V AC (depends on AC adapter)					
	Power consumption	Max. 12 W (12V, 1A)					
Standard accessories		AC adapter: **No.357651**, Power cable/grounding wire: **No.02ZAA000**, AC cable (USA): **No.02ZAA010*** Hex wrench (2 pcs, for fixing contact point and for removing fixing bracket)					

*1: Normal measurement using standard contact point.
*2: Or less temperature change. Hot or cold direct air flow should be avoided.
*3: 0.15N, 1N types are factory-installed option.

DIMENSIONS

Unit: mm

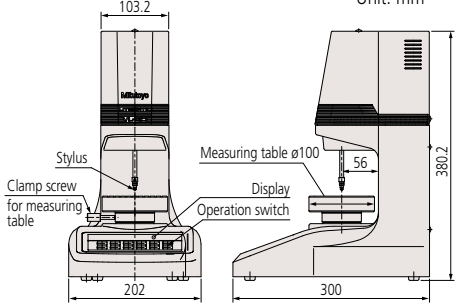

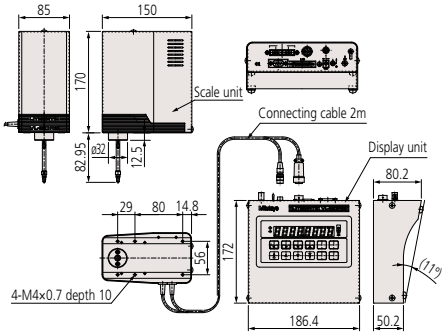

Mitutoyo

Head

Plain Stem and Stem with Clamp Nut

The stem used to mount a linear gage head is classified as a plain type or clamp nut type as illustrated below. The clamp nut stem allows fast and secure clamping of the linear gage head. The plain stem has the advantage of wider application and slight positional adjustment in the axial direction on final installation, although it does requires a split-fixture clamping arrangement or adhesive fixing. However, take care so as not to exert excessive force on the stem.

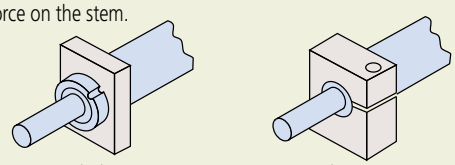

Stem locknut type　　Plain stem

Measuring Force

This is the force exerted on a workpiece during measurement by the contact point of a linear gage head, at its stroke end, expressed in newtons.

Comparative Measurement

A measurement method where a workpiece dimension is found by measuring the difference in size between the workpiece and a master gage representing the nominal workpiece dimension.

Ingress Protection Code

IP54 protection code

Type	Level	Description
Protects the human body and protects against foreign objects	5: Dust protected	Protection against harmful dust
Protects against exposure to water	4: Splash-proof type	Water splashing against the enclosure from any direction shall have no harmful effect.

IP66 protection code

Type	Level	Description
Protection against contact with the human body and foreign objects	6: Dust tight	Protection from dust ingress Complete protection against contact
Protects against exposure to water	6: Water-resistant type	Water jets directed against the enclosure from any direction shall have no harmful effect.

Precautions in Mounting a Gage Head

- Insert the stem of the gage into the mounting clamp of a measuring unit or a stand and tighten the clamp screw.
- Notice that excessively tightening the stem can cause problems with spindle operation.
- Never use a mounting method in which the stem is clamped by direct contact with a screw.
- Never mount a linear gage by any part other than the stem.
- Mount the gage head so that it is in line with the intended direction of measurement. Mounting the head at an angle to this direction will cause an error in measurement.
- Exercise care so as not to exert a force on the gage through the cable.

Precautions in Mounting a Laser Hologage

To fix the Laser Hologage, insert the stem into the dedicated stand or fixture.

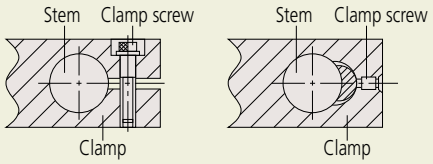

Recommended hole diameter on the fixing side: 15mm +0.034/-0.014

- Machine the clamping hole so that its axis is parallel with the measuring direction. Mounting the gage at an angle will cause a measuring error.
- When fixing the Laser Hologage, do not clamp the stem too tightly. Over-tightening the stem may impair the sliding ability of the spindle.
- If measurement is performed while moving the Laser Hologage, mount it so that the cable will not be strained and no undue force will be exerted on the gage head.

Display Unit

Zero-setting

A display value can be set to 0 (zero) at any position of the spindle.

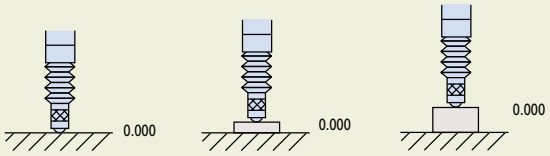

Presetting

Any numeric value can be set on the display unit for starting the count from this value.

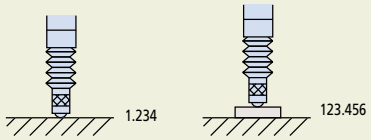

Direction Changeover

The measuring direction of the gage spindle can be set to either plus (+) or minus (-) of count.

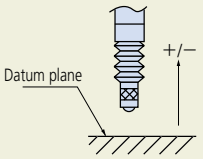

MAX, MIN, TIR Settings

The display unit can hold the maximum (MAX) and minimum (MIN) values, and MAX - MIN value during measurement.

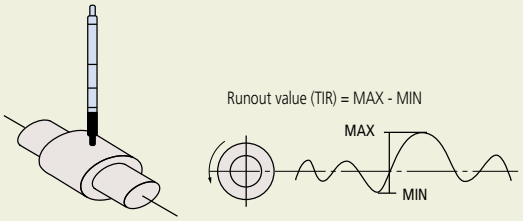

Tolerance Setting

Tolerance limits can be set in various display units for automatically indicating if a measurement falls within those limits.

Open Collector Output

An external load, such as a relay or a logic circuit, can be driven from the collector output of an internal transistor which is itself controlled by a tolerance judgement result, etc.

Relay output

Contact signal that outputs the open/closed status.

Digimatic Code

A communication protocol for connecting the output of measuring tools with various Mitutoyo data processing units. This allows output connection to a Digimatic Mini Processor DP-1VR for performing various statistical calculations and creating histograms, etc.

BCD Output

A system for outputting data in binary-coded decimal notation.

RS-232C Output

A serial communication interface in which data can be transmitted bi-directionally under the EIA Standards.
For the transmission procedure, refer to the specifications of each measuring instrument.

RS Link Function Multi-point measurement can be performed by connecting multiple EH or EV counters with RS Link cables.

RS Link for EH Counter

It is possible to connect a maximum of 10 counter units and handle up to 20 channels of multi-point measurement at a time.
For this connection use a dedicated RS Link cable **No.02ADD950** (0.5m), **No.936937** (1m) or **No.965014** (2m).
(The total length of RS Link cables permitted for the entire system is up to 10m.)

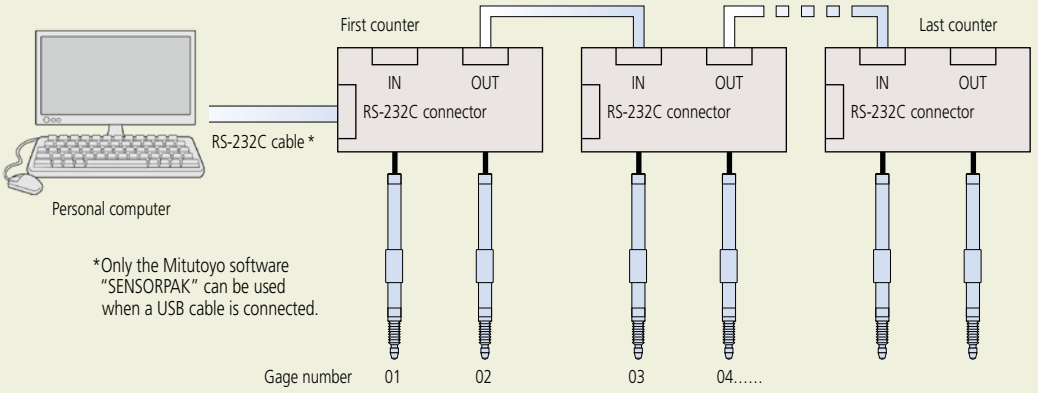

RS Link for EV Counter

It is possible to connect a maximum of 10* counter units and handle up to 60 channels of multi-point measurement at a time.
For this connection use a dedicated RS Link cable **No.02ADD950** (0.5m), **No.936937** (1m) or **No.965014** (2m).
(The total length of RS Link cables permitted for the entire system is up to 10m.)

* The maximum number of counter units that can be connected is limited to 6 (six) if an EH counter is included in the chain.

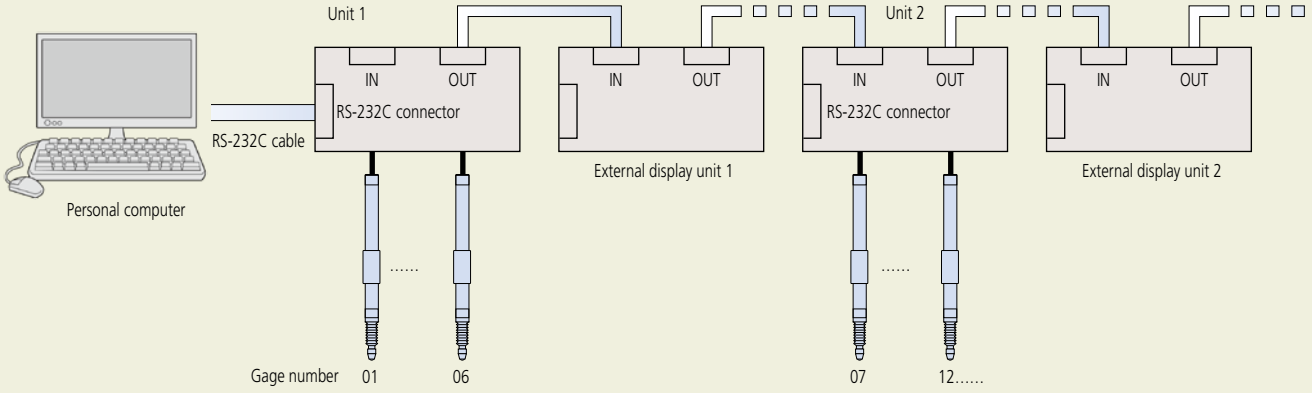

Mu-checker

To support building the system with automatic measuring unit or dedicated gages

SERIES 519 Mu-checker (Electronic micrometer)
Probes (Lever head)

Common specifications

- Connection: Half-bridge
- Cable length: 2m
- Connector type: **MAS-5100** (DIN5P) or equivalent

SPECIFICATIONS

Lever heads

Order No.	519-521	519-522	519-326*	519-327
Measuring range (mm)	±0.5			
Stroke (mm)	±0.6			±0.65
Measuring force (N)	Approx. 0.2	Approx. 0.02	Approx. 0.15	
Linearity (%)	±0.3			±0.5
Stylus support	Pivot bearing	Pivot bearing	Parallel-leaf spring	Pivot bearing

Note: A ø2mm ball-ended stylus is supplied as standard with all probes.
* This model is immune to cosine error.

519-521

- Interchangeable styli:
ø1: **520940** (Standard)
ø2: **520939** (Standard)
ø3: **520938** (Standard)

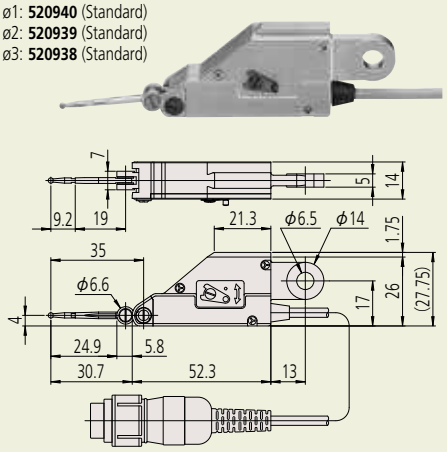

519-522

- Interchangeable styli:
ø1: **520940** (Standard)
ø2: **520939** (Standard)
ø3: **520938** (Standard)

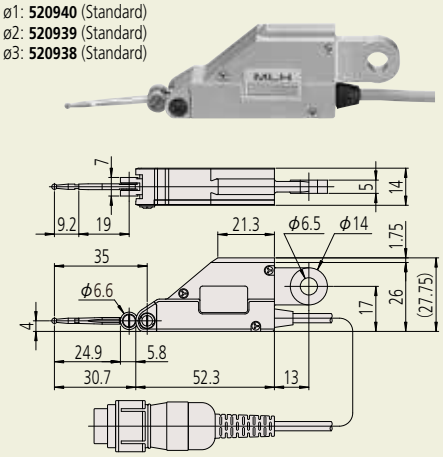

519-326

- Interchangeable styli:
ø1: **102824** (Option)
ø2: **102825** (Standard)
ø3: **102826** (Option)

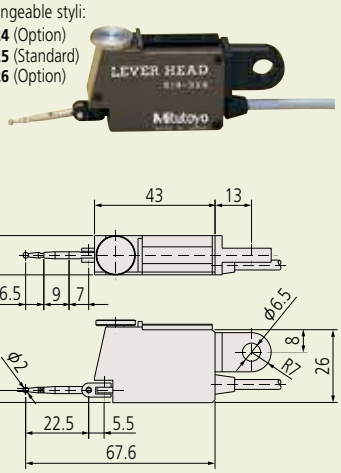

519-327

- Interchangeable styli:
ø1: **102824** (Option)
ø2: **102825** (Standard)
ø3: **102826** (Option)

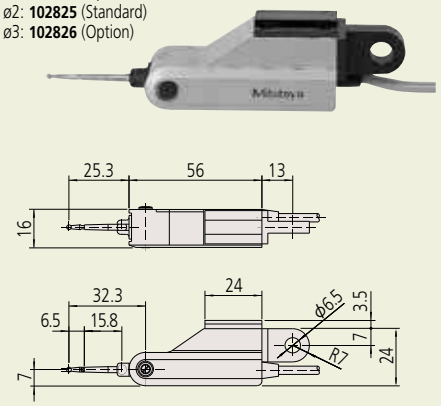

Lever probes

Lever probes are available in two types. The most common type uses a pivoted stylus so the contact point moves in a circular arc; this type is subject to cosine effect and, therefore, measurements may require linearity correction if the direction of measurement is much different to the direction of movement of the contact point. The less common type uses a parallel translation leaf-spring mechanism so contact point movement is linear; this type requires no correction.

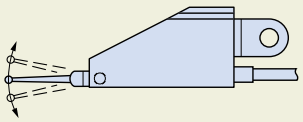

Pivoted stylus type
519-521 (measuring direction can be switched with the up/down lever)
519-522 (measuring direction is not switchable, low force)
519-327 (Clutchless)

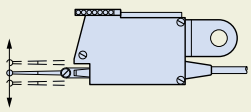

Parallel translation type
519-326 (measuring direction can be switched with the upper dial)

Lever-head mounting brackets (optional)

Optional accessories for Mitutoyo test indicators can be used.

Stems



ø4 dovetail-grooved stem
902802



ø6 dovetail-grooved stem
902803



ø8 dovetail-grooved stem
902804

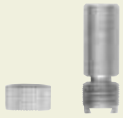

ø3/8" dovetail-grooved stem
902805

Clamp



Clamp for ø6mm, 8 dovetail-grooved stem
902053



Clamp for ø6mm, 3/8" dovetail-grooved stem
900320

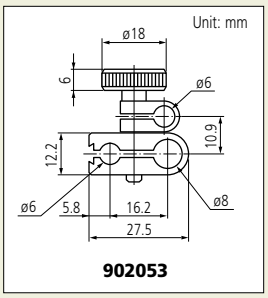

902053

Holder



Holding arm (Square 9x9, Length 100)
900209



Holding arm (ø8, Length 115)
900211



Holding arm (.25" x .5", Length 4")
900306

SERIES 519 Mu-checker (Electronic micrometer)
Probes (Cartridge head)

SPECIFICATIONS

Cartridge heads (special order only)

Order No.	519-331	519-332	519-346	519-347	519-385	519-341	519-348
Measuring range (mm)	±0.5	±0.5	±0.25	±0.5	±1.5	±2.5	±1.0
Stroke (mm)	±0.65	±0.65	+0.34 −0.26	+0.85 −0.65	+2.35 −1.65	+3.2 −2.8	+1.35 −1.15
Measuring force (N)	Approx. 0.25	Approx. 0.25	Approx. 0.7	Approx. 0.7	Approx. 0.7	Approx. 0.9	Approx. 0.7
Stem Dia. (mm)	ø8	ø3/8"	ø8	ø8	ø8	ø8	ø8
Linearity (%)	±0.5	±0.5	±0.3	±0.3	±0.3	±0.5	±0.3
Plunger support	Plain bearing		Linear ball-bearing				

519-331/(519-332)

• M2.5×5 (4-48 UNF) interchangeable contact points for dial indicators can be used.



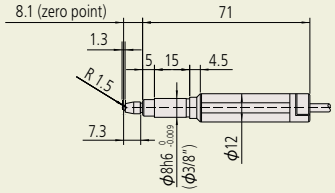

519-346



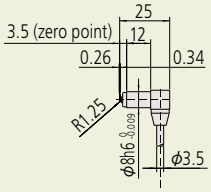

519-347



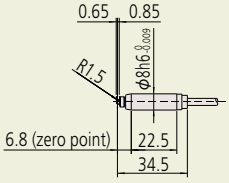

519-385

• M2.5×5 interchangeable contact points for dial indicators can be used.



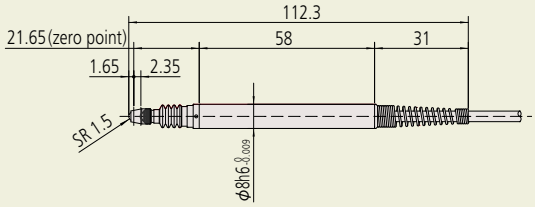

519-341

• M2.5×5 interchangeable contact points for dial indicators can be used.



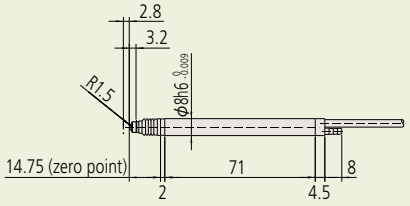

519-348

• M2.5×5 interchangeable contact points for dial indicators can be used.



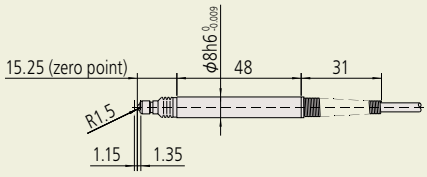

Mitutoyo

Mu-checker

SERIES 519 Mu-checker
(Analog/Digital electronic micrometer)

- Single touch zero-set function is standard.
- Switchable measurement ranges make the Mu-checker suitable for a range of applications.

Analog Mu-checker



Standard type
519-552A



Differential type
519-554A

SPECIFICATIONS

Order No.	519-552A	519-554A
Type	Standard type (one probe required)	Differential type (one/two probes required)
Display range	±5µm/±15µm/±50µm/±150µm/±500µm/±1500µm ±.00015"/±.0005"/±.0015"/±.005"/±.015"/±.05"	
Resolution	0.1µm/0.5µm/1µm/5µm/10µm/50µm .000005"/.00001"/.00005"/.0001"/.0005"/.001"	
Differential mode	±A	±A, ±B, ±A±B
Display accuracy (linearity)	±1% / ±full scale	
Analog output	±1V ±full scale	
Analog output accuracy	±0.1% Within ±full scale (excluding probe)	
Zero-setting adjustment range	Manual Instant zero setting: 1/3 of full scale for each range	
External dimensions	134(W) × 183(D) × 208(H) mm	
Mass	2.4kg	
Power input	AC adapter 100, 120, 220, 240VAC 50/60Hz	
Probe	Various probes (refer to page G-33 and G-34)	

Digital Mu-checker

- Single touch zero-set function is standard.
- Switchable measurement ranges make the Mu-checker suitable for a range of applications.
- Dual input.



Digital Mu-checker
519-562A

SPECIFICATIONS

Order No.	519-562A
Type	Differential type digital Mu-Checker (2 connecting heads)
Display range	±2.000mm/±0.2000mm/±.08"/±.008"
Resolution	0.001mm/0.0001mm/.00005"/.000005"
Differential mode	±A, ±B, ±A±B
Measurement mode	ABS/CMP
Analog output	±1V ±Full scale
Digital output	Digimatic code out
External dimension	134(W) × 183(D) × 208(H) mm
Mass	Approx. 2.6kg
Power input	AC adapter 100, 120, 220, 240VAC 50/60Hz
Probe	Various probes (refer to page G-33 and G-34)

Optional Accessories

- SPC Cable for connecting digital Mu-checker (**936937**)
  Used for connecting to the digimatic mini-processor.
- Output cable A (**934795**)
  Used for connecting to external devices, such as data recorders, etc.

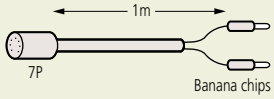

- Analog, limit out (7P) connector (**529035**)
  Used for output to external data recorders, sequencers, etc.

SERIES 519 6CH Mu-checker Counter EV-16A

Main features

- External control (Zero-set, Preset etc.)
- Direction switching
- Error messaging
- Tolerance judgment output
- Each data output (RS-232C, BCD, segment)
- Peak measurement (maximum value, minimum value, runout) and arithmetic operation (addition, average, maximum value, minimum value, maximum width) between axes

Optional Accessories

- I/O output connector: **02ADB440**
- D-EV external unit: **02ADB400**
- SPC cable, 0.5m: **02ADD950**
- SPC cable, 1m: **936937**
- SPC cable, 2m: **965014**

Note 1: To perform calibration a **D-EV (02ADB400)** display unit is required.
At least one **D-EV (02ADB400)** unit is required when using multiple **EV-16A (519-355)**.

Note 2: As a power supply is not supplied as standard. An appropriate power supply with a current capacity of 1A or more must be provided for each **EV-16A (519-355)**.

- The EV-16A counter unit provides multi-channel electronic micrometer functionality but without a display of the measurement results, which must be purchased separately. (See below.)
- Up to six probes can be connected to one unit. Up to ten counters can be connected to one personal computer using the RS Link function to enable the configuration of a multi-point measurement system comprising a maximum of 60 gages.
- I/O outputs for RS-232C, BCD, tolerance judgment and segment output are available.
- Maximum, minimum and runout measurement between channels (in the same unit) is possible in addition to normal measurement on individual channels.



SYSTEM CONFIGURATION

Mitutoyo probes, EV-16A counters and D-EV display units combined with commercial controllers and personal computers enable construction of a powerful, multi-channel system that can be built to meet the needs of almost any measurement application.

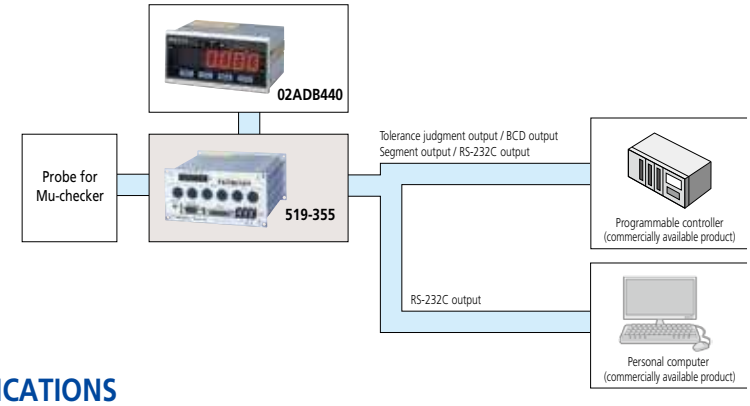

DIMENSIONS

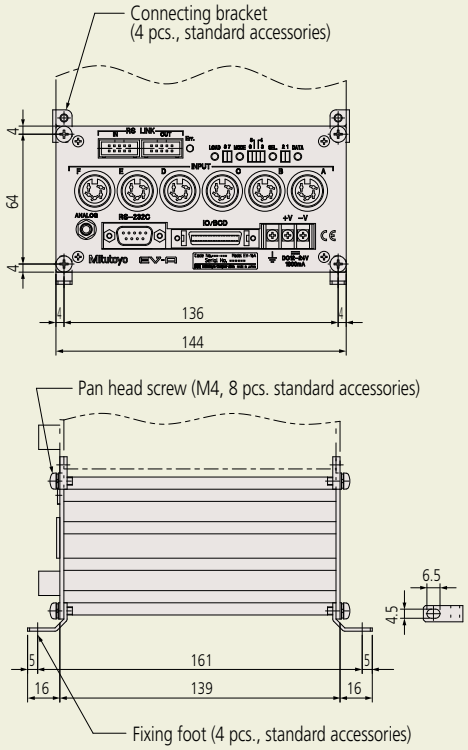

SPECIFICATIONS

Order No.		519-355
Number of gage inputs		Six
Display range (mm)		±2.000, ±0.200
Resolution (mm)		0.001, 0.0001
Display processing		8 digits for parameters (display setting), 1 for error display
Error messaging		Power supply voltage error, Gage error, etc.
External display		Dedicated external display unit D-EV (optional) can be connected
Number of input switches		4
Input switch function		Measurement mode switching, Parameter settings
I/O	Tolerance judgment output	1 to 6 gages (L1, L2, L3), open-collector
	BCD output	Parallel BCD output (positive/negative-true logic), open-collector
	Segment output	A function to enable only output from the terminal corresponding to the counting values, open-collector
	Control output	Normal operation signal (NOM), open-collector
	Control input	Output channel designation (segment, in BCD mode), presetting, peak value clear, range changeover (at segment output), holding counting value, open-collector or no-voltage contact signal (with/without contact point)
Interface	RS-232C	Measurement data output and control input, EIA RS-232C-compatible Use cross cables for home position DTE (terminal definition)
	RS link	Max. connected units: 10 (6 when using EF counter) Connecting cable length: Max. 10m (sum of link cable length) Data transfer time: 1.1 sec./60ch (when transmission rate is 19200 bps)
Rating	Power supply voltage	Terminal (M3 screw), 12-24VDC
	Current consumption	1A
Operating temperature (humidity) range		0 to 40 °C (RH 20 to 80%, no condensation)
Storage temperature (humidity) range		-10 to 50 °C (RH 20 to 80%, no condensation)
External dimensions		144(W) × 72(H) × 139(D) mm
Mass		Approx. 1000 g
Standard accessories		Fixing foot (4), connecting bracket (4), fixing screw M4 × 8 (8)
Applicable probes		For probes, refer to 519 series Mu-checker probes

Laser Scan Micrometer Selection Guide

MEASURING UNITS

Appearance	Model	Laser Classification	Measuring Range	Resolution (Selectable)
	**LSM-902***	**Visible** (650nm), IEC Class 2/ FDA Class II	0.1 - 25mm (.004" - 1.0")	0.01µm - 10µm (.000001" - .0005")
	**LSM-500S**	**Visible** (650nm), IEC Class 2/ FDA Class II	0.005 - 2mm (.0002" - .08")	0.01µm - 10µm (.000001" - .0005")
	**LSM-501S**	**Visible** (650nm), IEC Class 2/ FDA Class II	0.05 - 10mm (.002" - .4")	0.01µm - 10µm (.000001" - .0005")
	**LSM-503S**	**Visible** (650nm), IEC Class 2/ FDA Class II	0.3 - 30mm (.012" - 1.18")	0.02µm - 100µm (.000001" - .005")
	**LSM-506S**	**Visible** (650nm), IEC Class 2/ FDA Class II	1 - 60mm (.04" - 2.36")	0.05µm - 100µm (.000002" - .005")
	**LSM-512S**	**Visible** (650nm), IEC Class 2/ FDA Class II	1 - 120mm (.04" - 4.72")	0.1µm - 100µm (.000005" - .005")
	**LSM-516S**	**Visible** (650nm), IEC Class 2/ FDA Class II	1 - 160mm (.04" - 6.30")	0.1µm - 100µm (.000005" - .005")
 With display unit	**LSM-9506** Measuring unit - display unit one-piece structure for bench-top use only	**Visible** (650nm), IEC Class 2/ FDA Class II	0.5 - 60mm (.02" - 2.36")	0.05µm - 100µm (.000002" - .005")

DISPLAY UNITS

Appearance	Model	Type	Application	Interface Units Equipped
	**LSM-6200** **LSM-6900***	Multi-function type	Bench-top use	• RS-232C • I/O • Analog output
	**LSM-5200****	Compact type (Low cost)	Assembly/ bench-top use (DIN size)	• RS-232C • I/O • Analog output • USB***

*LSM-902 and LSM-6900 are factory-set package.
**When connecting with the LSM-500S series, the scanning speed becomes 1600 scans/sec.
***USB connectivity for use with Quicktool and LSM Pak.

Measurement Examples

In-line measurement of glass fiber or fine wire diameter

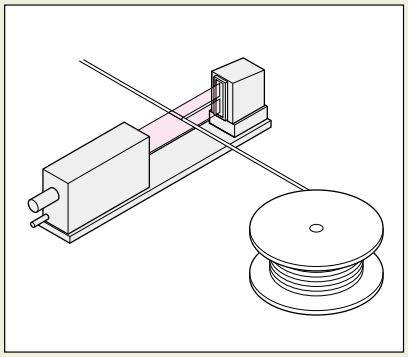

Measurement of outer diameter of cylinder

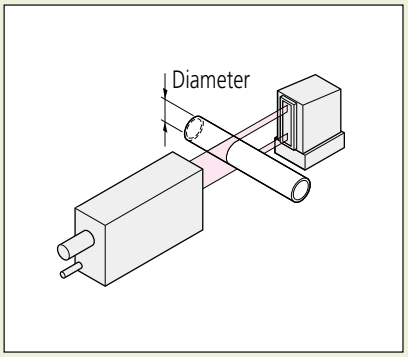

Measurement of outer diameter and roundness of cylinder

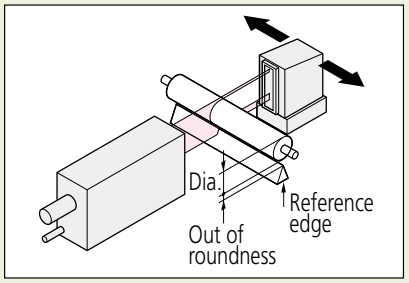

X- and Y-axis measurement of electric cables and fibers

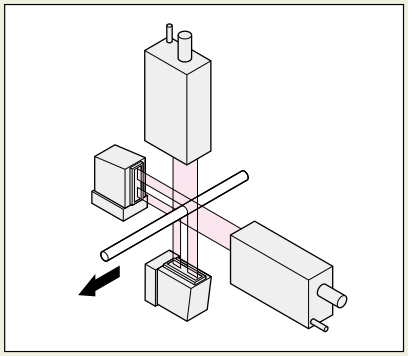

Measurement of thickness of film and sheet

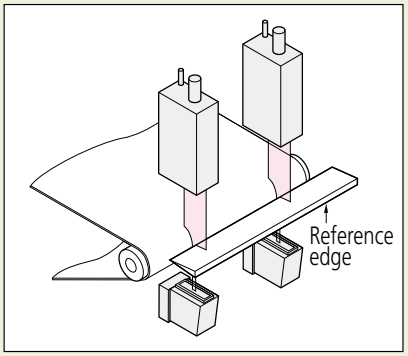

Measurement of spacing of IC chip leads

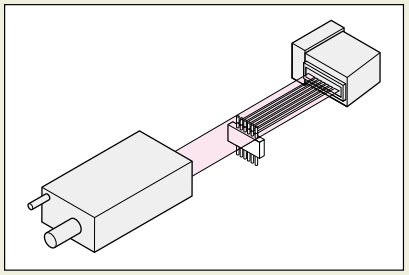

Measurement of film sheet thickness

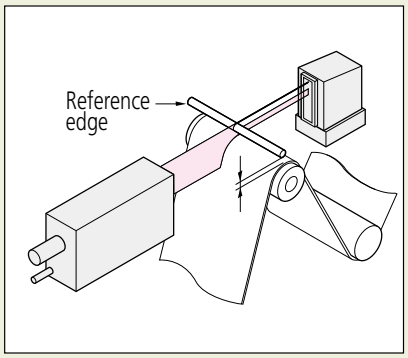

Measurement of laser disk and magnetic disk head movement

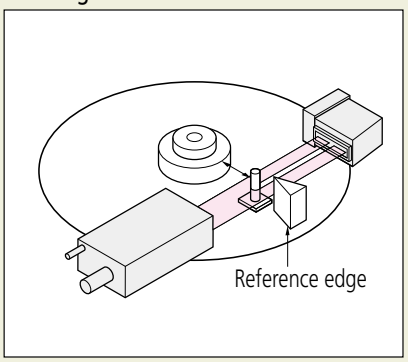

Measurement of gap between rollers

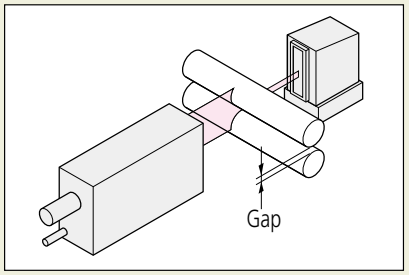

Measurement of tape width

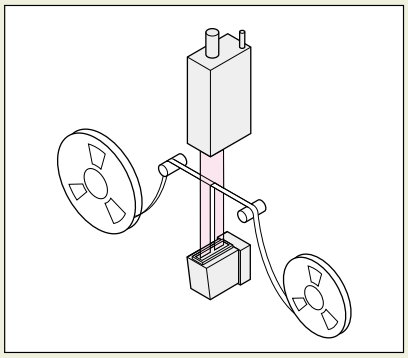

Measurement of outer diameter of optical connector and ferrule

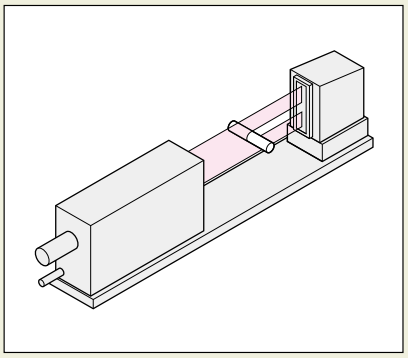

Measurement of form

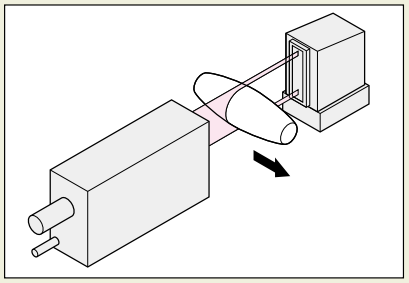

Dual system for measuring a large outside diameter

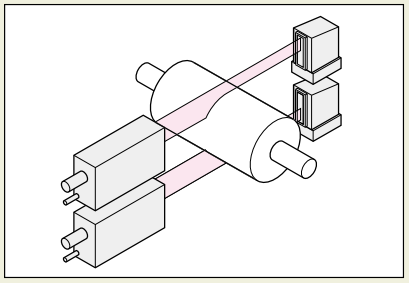

Mitutoyo

Laser Scan Micrometer LSM-902/6900

SERIES 544 — Ultra-high Accuracy Non-contact Measuring System

- Non-contact laser-based measuring system, mainly for outside diameter measurement. Suitable for delicate or moving workpieces.
- Accuracy of ±0.5µm in the ø0.1 - ø25mm range can be achieved. It is suitable for pin gage measurement.
- Narrow range accuracy of ±(0.3+0.1ΔD)µm for high-precision measurement.
- Ultra-high repeatability of ±0.05µm.
- The system consists of a measuring unit (LSM-902) and a display unit (LSM-6900).



SPECIFICATIONS

Set Order No.		544-496A
Measuring unit		
Type		inch/mm
Measuring range		0.1 to 25mm (.004 - 1.0")
Resolution		0.01 to 10µm (selectable) (.000001 - .0005")
Repeatability*1		±0.05µm (±.000002")
Accuracy*2 (20°C)	Whole range	±0.5µm (±.000020")
	Small range	±(0.3+0.1ΔD) [D:mm]*5 ±(.000012+.001ΔD) [D:inch]
Positional error*3		±0.5µm (±.000020")
Measuring area*4		±1.5×25mm (±0.6x1.0")
Scanning rate		800 scans/s
Laser wavelength		650nm (Visible)
Laser scanning speed		56m/s (2240"/sec)
Operating environment	Temperature	0 to 40°C
	Humidity	RH 35 to 85% (no condensation)

*1: Determined by the value of ±2σ (σ: standard deviation) when measuring ø25mm at the interval of 1.28 sec. (average 1024 times).
*2: At the center of the measuring range.
*3: An error due to variation in workpiece position either in the optical axis direction or in the scanning direction.
*4: The area given by [optical axis direction]×[scanning direction]
*5: ΔD=Difference in diameter between the master gage and workpiece (Unit: mm)

Display unit

Display	16-digit plus 11-digit fluorescent display, and guide message LED
Segment	1 to 7 (1 to 3, transparent) or 1 to 255 edges
Averaging times	Arithmetic average: per 1 to 2048/ Moving average: per 32 to 2048
Judgment	Selection from target value + tolerance, lower tolerance + upper tolerance, or 7 classes multi-limit tolerance zone.
Measurement mode	Standby, Single measurement, Continuous measurement
Statistical analysis	Maximum, Minimum, Average, Dispersion, σ(S.D)
External dimensions	335 (W)×134 (H)×250 (D)mm
Power supply	120 V AC ±10%, 50W, 60Hz
Standard I/F	RS-232C, Analog I/O
Optional I/F	Digimatic code output unit (2-ch), 2nd I/O analog I/F, BCD I/F
Operating environment	0 to 40°C, RH 35 to 85% (no condensation)
Others	Nominal setting, sample setting, selection of unnecessary digits, transparent object measurement, automatic measurement in edge mode, output timer, abnormal data elimination, SHL change, group judgment, simultaneous measurement, statistical processing, mastering, buzzer function, automatic workpiece detection (dimension/position), zero-set/offset * Measuring unit dual connection, extra-fine line measurement, and some of the communication commands are not available.

Measuring Unit External Dimensions

Unit: mm

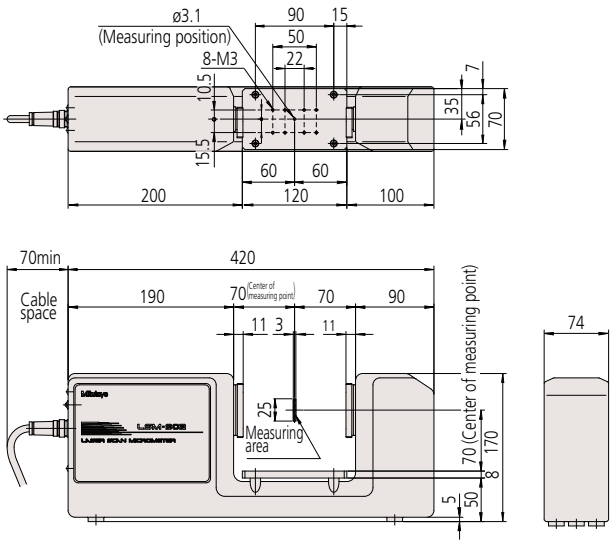

Optional Accessories

(Refer to page G-44 for details.)

- Calibration gage set (ø1.0, ø25.0) : **No.02AGD180**
- Workstage : **No.02AGD270**
- Adjustable workstage : **No.02AGD280**
- Digimatic code output unit (2-ch) : **No.02AGC840**
- 2nd I/O analog interface unit : **No.02AGC880**
- BCD interface unit : **No.02AGC910**
- Printer & cable set (120V AC C-type plug) : **No.02AGD600B**
- Printing paper TP411-28CL / 1Pack = 10pcs : **No.223663**
- Digimatic code output cable : **No.936937**
- Foot switch : **No.937179T**

QUICKTOOL

QUICKTOOL is a free downloadable software program that makes programming the LSM-6200 quick and easy.
Basic data acquisition is also possible.
(Connecting cables to PC are optional)

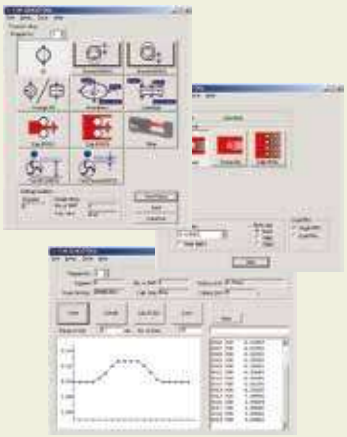

Laser safety

Mitutoyo Laser Scan Micrometers use a low-power visible laser for measurement. The laser is a CLASS 2 EN/IEC60825-1 (2007) device. Warning and explanation labels, as shown below, are attached to the Laser Scan Micrometers as is appropriate.



Laser Scan Micrometer LSM-500S

SERIES 544 — High Accuracy Non-contact Measuring System

- Capable of measuring down to 5µm outside diameter*1.
- Provides ultra-high accuracy of ±0.3µm over the entire measuring range (5µm to 2mm).
- Ultra-high speed measurement of 3200 scan/sec.
  Suitable for high-speed lines or in applications subject to vibration.

IP64



SPECIFICATIONS

Order No. (Laser only)		**544-532**
Package No. (with LSM 6200 Display)		**64PKA117**
Applicable laser standards		IEC, FDA
User's manual		English version
Measuring range		.0002" to .080" (0.005 to 2mm)*1
Resolution		.000001" to .0005" (0.01 to 10µm) (selectable)
Repeatability*2		±0.03µm
Accuracy (20°C)*3		±0.3µm
Positional error*4		±0.4µm
Measuring area*5		1×2mm (0.005 to 2mm)
Scanning rate		3200 scans/s
Laser wavelength		650nm (Visible)
Laser scanning speed		76m/s
Operating environment	Temperature	0 to 40°C
	Humidity	RH 35 to 85% (no condensation)
Protection Level		IP64*6

*1: The measuring range for the transparent object will be 0.05mm to 2mm. Please consult your local Mitutoyo office for objects smaller than 0.05mm.
The measuring range will be 0.1mm to 2mm in the 1 to 255 edge measurement mode or when activating the automatic workpiece detection.
If using the optional dual-connection unit for LSM-6200, the measuring range will be 0.05mm to 2mm.
*2: Determined by the value of ±2σ (σ: standard deviation) when measuring ø2mm at the interval of 0.32 sec. (average 1024 times).
*3: Center of the measuring range for cylindrical workpieces outside diameter.
*4: An error of the outside diameter due to variation in workpiece position either in the optical axis direction or in the scanning direction.
*5: The area given by [optical axis direction]×[scanning direction].
*6: If the workpiece or glass of the measuring unit window is soiled by water or dust, the unit may malfunction.
Note: When using extra-fine line measurement function (FINE), guide messages for setting the following will not be displayed: dual-measurement, segment designation, automatic workpiece detection and group judgment.

DIMENSIONS

Unit: mm

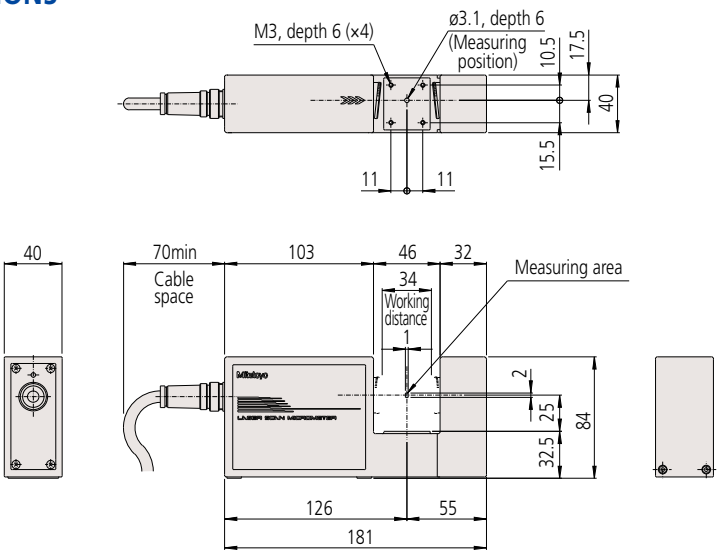

Optional Accessories

• Multifunctional display unit, **LSM-6200***:

Order No.	Display type	Remarks
544-072A	English mm/inch	English user's manual

* Included in packages

• Easy-to-operate display unit, **LSM-5200**:

Order No.	Remarks
544-047*	English user's manual

* AC adapter not included

- Calibration gage set (ø0.1, ø2.0)
- Guide pulley : **No.02AGD110**
- Air blower : **No.02AGD200**
- Extension signal cables: : **No.02AGD220**

Order No.	Cable length
02AGN780A	5m
02AGN780B	10m
02AGN780C	15m

QUICKTOOL

QUICKTOOL is a free downloadable software program that makes programming the LSM-6200 quick and easy.
Basic data acquisition is also possible.
(Connecting cables to PC are optional)

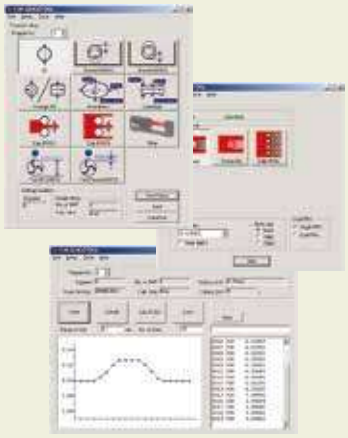

Laser safety

Mitutoyo Laser Scan Micrometers use a low-power visible laser for measurement. The laser is a CLASS 2 EN/IEC60825-1 (2007) device. Warning and explanation labels, as shown below, are attached to the Laser Scan Micrometers as is appropriate.



Mitutoyo

Laser Scan Micrometer LSM-501S

SERIES 544 — High-accuracy Non-contact Measuring System

- Provides ultra-high accuracy of ±0.5μm over the entire measuring range (0.05 to 10mm).
- Narrow range accuracy of ±(0.3+0.1ΔD)μm for high-precision measurement.
- Ultra-high speed measurement of 3200 scan/sec.
  Suitable for high-speed lines or in applications subject to vibration.



IP64

SPECIFICATIONS

Order No. (Laser only)		544-534
Package No. (Laser w/LSM 6200 display)		64PKA118
Applicable laser standards		IEC, FDA
User's manual		English version
Measuring range		.002" to .4" (0.05 to 10mm)
Resolution		.000001" to .0005" (0.01 to 10μm) (selectable)
Repeatability*1		±0.04μm
Accuracy*2 (20°C)	Whole range	±0.5μm
	Small range	±(0.3+0.1ΔD)μm*3
Positional error*4		±0.5μm
Measuring area*5		2×10mm (ø0.05 to ø0.1mm) 4×10mm (ø0.1 to ø10mm)
Scanning rate		3200 scans/s
Laser wavelength		650nm (Visible)
Laser scanning speed		113m/s
Operating environment	Temperature	0 to 40°C
	Humidity	RH 35 to 85% (no condensation)
Protection Level		IP64*6

*1: Determined by the value of ±2σ (σ: standard deviation) when measuring ø10mm at the interval of 0.32 sec. (average 1024 times).
*2: Center of the measuring range for cylindrical workpieces outside diameter.
*3: ΔD=Difference in diameter between the master gage and workpiece (Unit: mm)
*4: An error of the outside diameter due to variation in workpiece position either in the optical axis direction or in the scanning direction.
*5: The area given by [optical axis direction]×[scanning direction].
*6: The protection level provided for the interior. If the workpiece or glass of the measuring unit window is soiled by water or dust, the unit may malfunction.

DIMENSIONS

Unit: mm

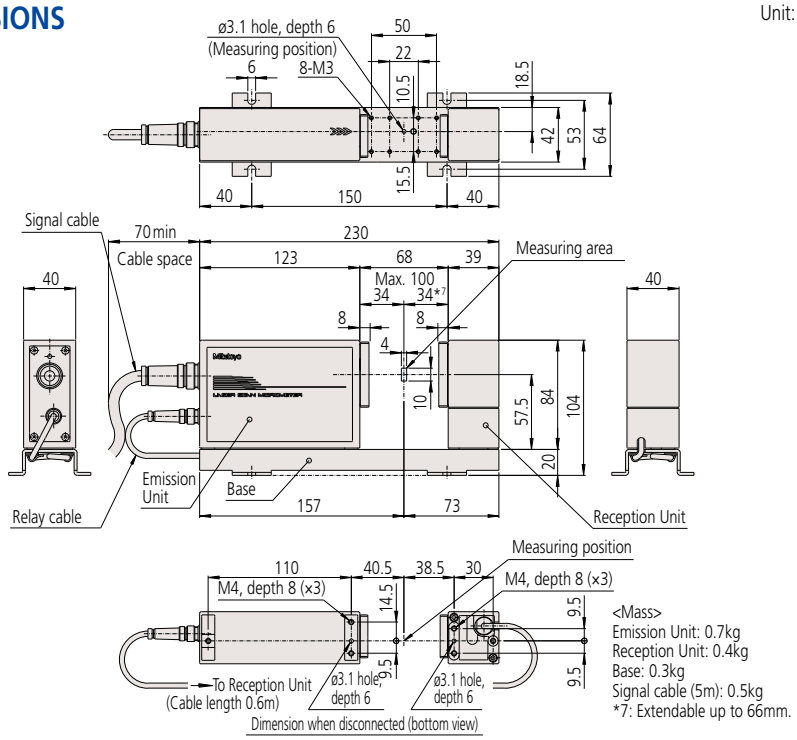

<Mass>
Emission Unit: 0.7kg
Reception Unit: 0.4kg
Base: 0.3kg
Signal cable (5m): 0.5kg
*7: Extendable up to 66mm.

Optional Accessories

- Multifunctional display unit, **LSM-6200***:

Order No.	Display type	Remarks
544-072A	English mm/inch	English user's manual

* Included in packages

- Easy-to-operate display unit, **LSM-5200**:

Order No.	Remarks
544-047*	English user's manual

* AC adapter not included

- Calibration gage set (ø0.1, ø10.0) : **No.02AGD120**
- Wire guiding pulley : **No.02AGD210**
- Adjustable workstage : **No.02AGD400**
- Air blower : **No.02AGD230**
- Workstage : **No.02AGD270**
- Extension signal cables

Order No.	Cable length
02AGN780A	5m
02AGN780B	10m
02AGN780C	15m

- Extension relay cables

Order No.	Cable length
02AGC150A	1m

QUICKTOOL

QUICKTOOL is a free downloadable software program that makes programming the LSM-6200 quick and easy.
Basic data acquisition is also possible.
(Connecting cables to PC are optional)

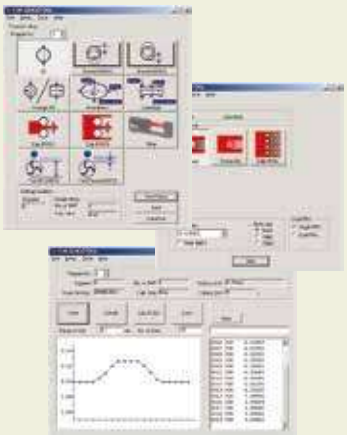

Laser safety

Mitutoyo Laser Scan Micrometers use a low-power visible laser for measurement. The laser is a CLASS 2 EN/IEC60825-1 (2007) device. Warning and explanation labels, as shown below, are attached to the Laser Scan Micrometers as is appropriate.



Laser Scan Micrometer LSM-503S

SERIES 544 — High-accuracy Non-contact Measuring System

- Ensures ±1.0μm accuracy over the entire measuring range (0.3 to 30mm).
- Narrow range accuracy of ±(0.6+0.1ΔD)μm for high-precision measurement.
- Ultra-high speed measurement of 3200 scan/sec.
  Suitable for high-speed lines or in applications subject to vibration.



IP64

SPECIFICATIONS

Order No. (Laser only)		544-536
Package No. (Laser w/LSM 6200 display)		64PKA119
Applicable laser standards		IEC, FDA
User's manual		English version
Measuring range		.012" to 1.18" (0.3 to 30mm)
Resolution		.000001" to .005" (0.02 to 100μm) (selectable)
Repeatability*1		±0.11μm
Accuracy*2 (20°C)	Whole range	±1.0μm
	Small range	±(0.6+0.1ΔD)μm*3
Positional error*4		±1.5μm
Measuring area*5		10×30mm (0.3 to 30mm)
Scanning rate		3200 scans/s
Laser wavelength		650nm (Visible)
Laser scanning speed		226m/s
Operating environment	Temperature	0 to 40°C
	Humidity	RH 35 to 85% (no condensation)
Protection Level		IP64*6

*1: Determined by the value of ±2σ (σ: standard deviation) when measuring ø30mm at the interval of 0.32 sec. (average 1024 times).
*2: Center of the measuring range for cylindrical workpieces outside diameter.
*3: ΔD=Difference in diameter between the master gage and workpiece (Unit: mm).
*4: An error of the outside diameter due to variation in workpiece position either in the optical axis direction or in the scanning direction.
*5: The area given by [optical axis direction]×[scanning direction].
*6: The protection level provided for the interior. If the workpiece or glass of the measuring unit window is soiled by water or dust, the unit may malfunction.

DIMENSIONS

Unit: mm

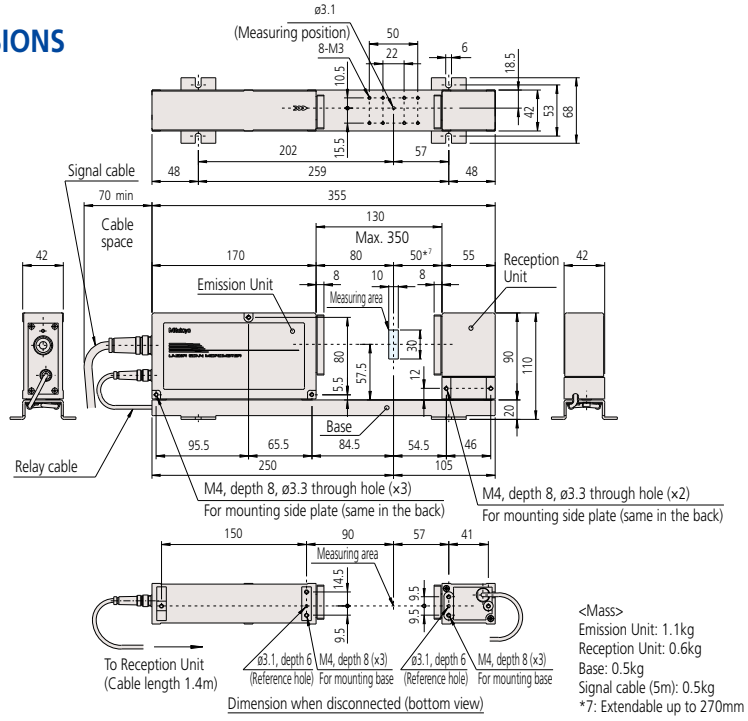

<Mass>
Emission Unit: 1.1kg
Reception Unit: 0.6kg
Base: 0.5kg
Signal cable (5m): 0.5kg
*7: Extendable up to 270mm

Optional Accessories

• Multifunctional display unit, **LSM-6200***:

Order No.	Display type	Remarks
544-072A	English mm/inch	English user's manual

* Included in packages

• Easy-to-operate display unit, **LSM-5200**:

Order No.	Remarks
544-047*	English user's manual

* AC adapter not included

• Calibration gage set (ø0.1, ø30.0) : **No.02AGD130**
• Adjustable workstage : **No.02AGD490**
• Air blower : **No.02AGD240**
• Workstage : **No.02AGD270**
• Extension signal cables

Order No.	Cable length
02AGN780A	5m
02AGN780B	10m
02AGN780C	15m
02AGN780D	20m

• Extension relay cables

Order No.	Cable length
02AGC150A	1m
02AGC150B	3m
02AGC150C	5m

QUICKTOOL

QUICKTOOL is a free downloadable software program that makes programming the LSM-6200 quick and easy.
Basic data acquisition is also possible.
(Connecting cables to PC are optional)

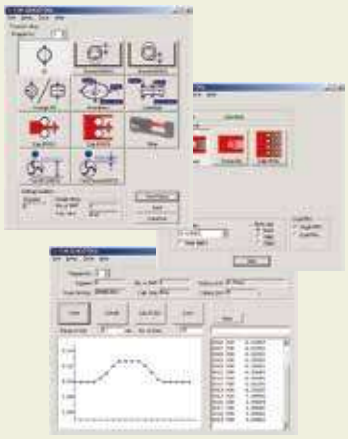

Laser safety

Mitutoyo Laser Scan Micrometers use a low-power visible laser for measurement. The laser is a CLASS 2 EN/IEC60825-1 (2007) device. Warning and explanation labels, as shown below, are attached to the Laser Scan Micrometers as is appropriate.



Mitutoyo

Laser Scan Micrometer LSM-506S

SERIES 544 — High-accuracy Non-contact Measuring System

- Ensures ±3μm accuracy over the entire measuring range (1 to 60mm).
- Narrow range accuracy of ±(1.5+0.5ΔD)μm for high precision measurement.
- Ultra-high speed measurement of 3200 scan/sec. Suitable for high-speed lines or in applications subject to vibration.

IP64



SPECIFICATIONS

Order No. (Laser only)		544-538
Package No. (Laser w/ LSM 6200 display)		64PKA120
Applicable laser standards		IEC, FDA
User's manual		English version
Measuring range		.040" to 2.36" (1 to 60mm)
Resolution		.000002" to .005" (0.05 to 100μm) (selectable)
Repeatability*1		±0.36μm
Accuracy*2 (20°C)	Whole range	±3μm
	Small range	±(1.5+0.5ΔD)μm*3
Positional error*4		±4μm
Measuring area*5		20×60mm (1 to 60mm)
Scanning rate		3200 scans/s
Laser wavelength		650nm (Visible)
Laser scanning speed		452m/s
Operating environment	Temperature	0 to 40°C
	Humidity	RH 35 to 85% (no condensation)
Protection Level		IP64*6

*1: Determined by the value of ±2σ (σ: standard deviation) when measuring ø60mm at the interval of 0.32 sec. (average 1024 times).
*2: Center of the measuring range for cylindrical workpieces outside diameter.
*3: ΔD=Difference in diameter between the master gage and workpiece (Unit: mm)
*4: An error of the outside diameter due to variation in workpiece position either in the optical axis direction or in the scanning direction.
*5: The area given by [optical axis direction]×[scanning direction].
*6: The protection level provided for the interior. If the workpiece or glass of the measuring unit window is soiled by water or dust, the unit may malfunction.

DIMENSIONS

Unit: mm

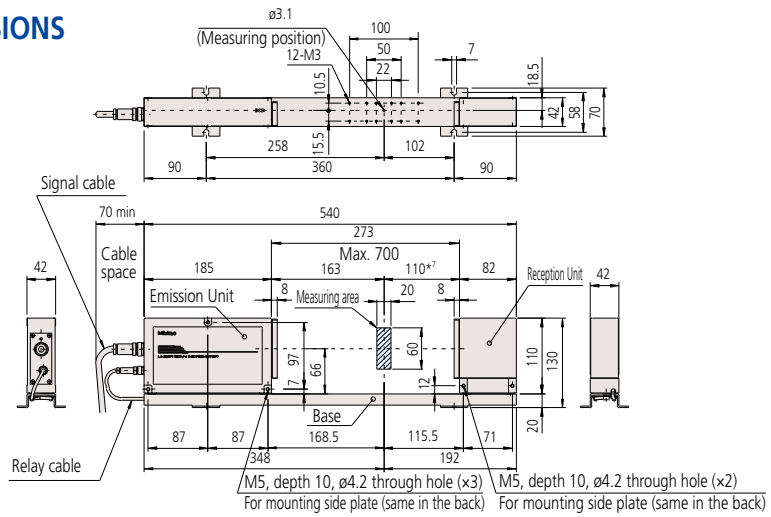

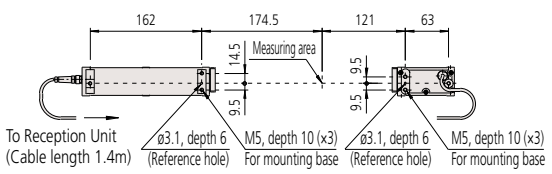

Dimension when disconnected (bottom view)

<Mass>
Emission Unit: 1.4kg
Reception Unit: 0.8kg
Base: 0.8kg
Signal cable (5m): 0.5kg
*7: Extendable up to 537mm

Optional Accessories

- Multifunctional display unit, **LSM-6200***:

Order No.	Display type	Remarks
544-072A	English mm/inch	English user's manual

* Included in packages

- Easy-to-operate display unit, **LSM-5200**:

Order No.	Remarks
544-047*	English user's manual

* AC adapter not included

- Calibration gage set (ø1.0, ø60.0) : **No.02AGD140**
- Adjustable workstage : **No.02AGD520**
- Air blower : **No.02AGD250**
- Extension signal cables

Order No.	Cable length
02AGN780A	5m
02AGN780B	10m
02AGN780C	15m
02AGN780D	20m

- Extension relay cables

Order No.	Cable length
02AGC150A	1m
02AGC150B	3m
02AGC150C	5m

QUICKTOOL

QUICKTOOL is a free downloadable software program that makes programming the LSM-6200 quick and easy.
Basic data acquisition is also possible.
(Connecting cables to PC are optional)

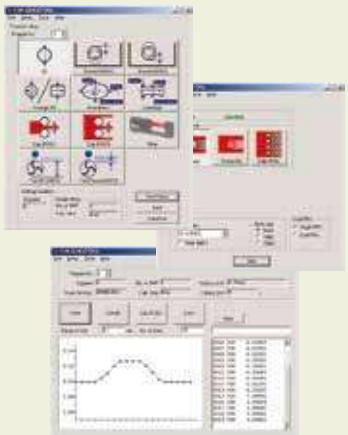

Laser safety

Mitutoyo Laser Scan Micrometers use a low-power visible laser for measurement. The laser is a CLASS 2 EN/IEC60825-1 (2007) device. Warning and explanation labels, as shown below, are attached to the Laser Scan Micrometers as is appropriate.



Laser Scan Micrometer LSM-512S

SERIES 544 — High-accuracy Non-contact Measuring System

- Ensures ±6µm accuracy over the entire measuring range (1 to 120mm).
- Narrow range accuracy of ±(4.0+0.5ΔD)µm for high-precision measurement.
- Ultra-high speed measurement of 3200 scan/sec. Suitable for high speed-lines or in applications subject to vibration.

IP64



SPECIFICATIONS

Order No. (Laser only)		544-540
Package No. (Laser w/ LSM 6200 display)		64PKA121
Applicable laser standards		IEC, FDA
User's manual		English version
Measuring range		.040" to 4.72" (1 to 120mm)
Resolution		.000005" to .005" (0.1 to 100µm) (selectable)
Repeatability*1		±0.85µm
Accuracy*2 (20°C)	Whole range	±6µm
	Small range	±(4.0+0.5ΔD)µm*3
Positional error*4		±8µm
Measuring area*5		30×120mm (1 to 120mm)
Scanning rate		3200 scans/s
Laser wavelength		650nm (Visible)
Laser scanning speed		904m/s
Operating environment	Temperature	0 to 40°C
	Humidity	RH 35 to 85% (no condensation)
Protection level		IP64*6

*1: Determined by the value of ±2σ (σ: standard deviation) when measuring ø120mm at the interval of 0.32 sec. (average 1024 times).
*2: Center of the measuring range for cylindrical workpieces outside diameter.
*3: ΔD=Difference in diameter between the master gage and workpiece (Unit: mm)
*4: An error of the outside diameter due to variation in workpiece position either in the optical axis direction or in the scanning direction.
*5: The area given by [optical axis direction]×[scanning direction].
*6: The protection level provided for the interior. If the workpiece or glass of the measuring unit window is soiled by water or dust, the unit may malfunction.

DIMENSIONS

Unit: mm

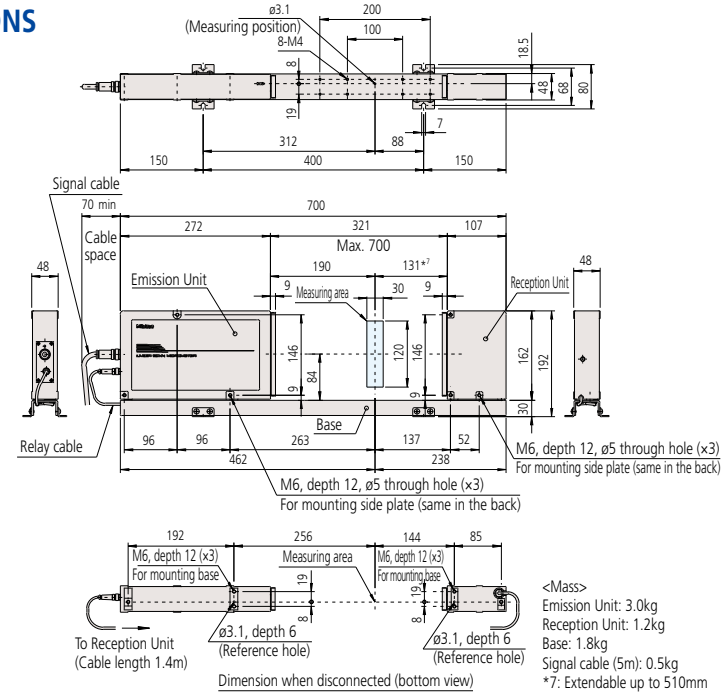

<Mass>
Emission Unit: 3.0kg
Reception Unit: 1.2kg
Base: 1.8kg
Signal cable (5m): 0.5kg
*7: Extendable up to 510mm

Optional Accessories

• Multifunctional display unit, **LSM-6200***:

Order No.	Display type	Remarks
544-072A	English mm/inch	English user's manual

* Included in packages

• Easy-to-operate display unit, **LSM-5200**:

Order No.	Remarks
544-047*	English user's manual

* AC adapter not included

• Calibration gage set (ø20.0, ø120.0) : **No.02AGD150**
• Air blower : **No.02AGD260**
• Extension signal cables

Order No.	Cable length
02AGN780A	5m
02AGN780B	10m
02AGN780C	15m
02AGN780D	20m

• Extension relay cables

Order No.	Cable length
02AGC150A	1m
02AGC150B	3m
02AGC150C	5m

• Roll diameter/form measuring instrument (Refer to page G-60 for details.)

QUICKTOOL

QUICKTOOL is a free downloadable software program that makes programming the LSM-6200 quick and easy.
Basic data acquisition is also possible.
(Connecting cables to PC are optional)

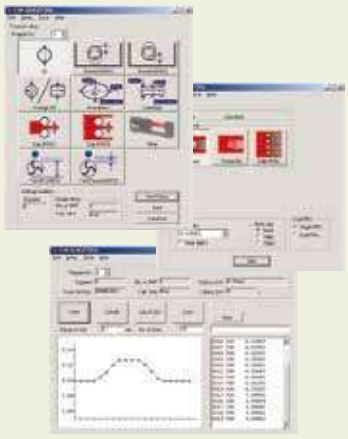

Laser safety

Mitutoyo Laser Scan Micrometers use a low-power visible laser for measurement. The laser is a CLASS 2 EN/IEC60825-1 (2007) device. Warning and explanation labels, as shown below, are attached to the Laser Scan Micrometers as is appropriate.



Mitutoyo

Laser Scan Micrometer LSM-516S

SERIES 544 — High-accuracy Non-contact Measuring System

- Ensures ±7µm accuracy over the entire measuring range (1 to 160mm).
- Narrow range accuracy of ±(4.0+2.0ΔD)µm for high-precision measurement.
- Ultra-high speed measurement of 3200 scan/sec.
  Suitable for high-speed lines or in applications subject to vibration.

IP64



SPECIFICATIONS

Order No. (Laser only)		**544-542**
Package No. (Laser w/ LSM 6200 display)		**64PKA122**
Applicable laser standards		IEC, FDA
User's manual		English version
Measuring range		.040" to 6.3" (1 to 160mm)
Resolution		.000005" to .005" (0.1 to 100µm) (selectable)
Repeatability*1		±1.4µm
Accuracy*2 (20°C)	Whole range	±7µm
	Small range	±(4.0+2.0ΔD)µm*3
Positional error*4		±8µm
Measuring area*5		40×160mm (1 to 160mm)
Scanning rate		3200 scans/s
Laser wavelength		650nm (Visible)
Laser scanning speed		1206m/s
Operating environment	Temperature	0 to 40°C
	Humidity	RH 35 to 85% (no condensation)
Protection level		IP64*6

*1: Determined by the value of ±2σ (σ: standard deviation) when measuring ø160mm at the interval of 0.32 sec. (average 1024 times).
*2: Center of the measuring range for cylindrical workpieces outside diameter.
*3: ΔD=Difference in diameter between the master gage and workpiece (Unit: mm)
*4: An error of the outside diameter due to variation in cylinder position either in the optical axis direction or in the scanning direction.
*5: The area given by [optical axis direction]×[scanning direction].
*6: The protection level provided for the interior. If the workpiece or glass of the measuring unit window is soiled by water or dust, the unit may malfunction.

DIMENSIONS

Unit: mm

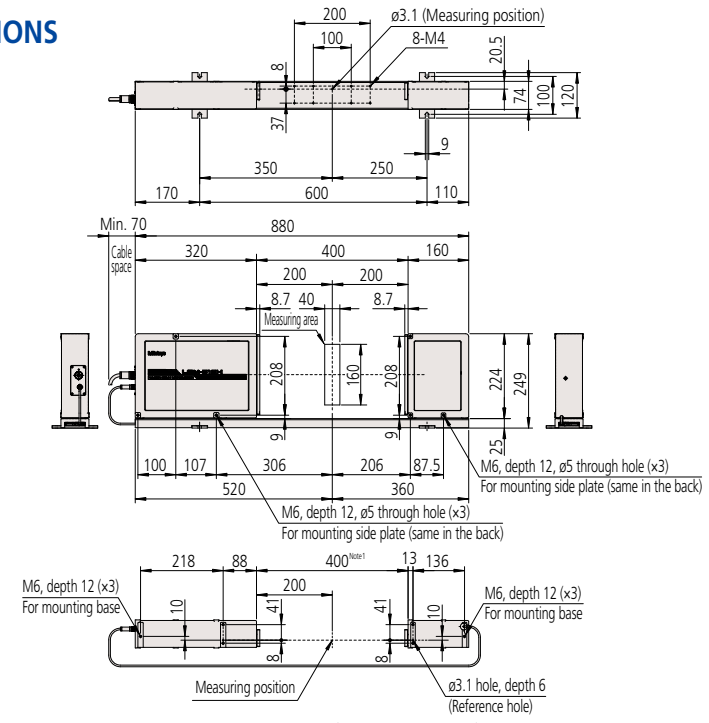

Note1: Distance between emission unit and reception unit: 400mm to 800mm

Optional Accessories

- Multifunctional display unit, **LSM-6200***:

Order No.	Display type	Remarks
544-072A	English mm/inch	English user's manual

* Included in packages

- Easy-to-operate display unit, **LSM-5200**:

Order No.	Remarks
544-047*	English user's manual

* AC adapter not included

- Calibration gage set (ø20, ø160) : **No.02AGM300**
- Extension signal cables

Order No.	Cable length
02AGN780A	5m
02AGN780B	10m
02AGN780C	15m
02AGN780D	20m

- Extension relay cables

Order No.	Cable length
02AGC150A	1m
02AGC150B	3m
02AGC150C	5m

QUICKTOOL

QUICKTOOL is a free downloadable software program that makes programming the LSM-6200 quick and easy.
Basic data acquisition is also possible.
(Connecting cables to PC are optional)

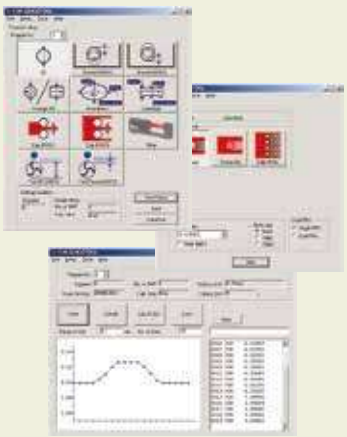

Laser safety

Mitutoyo Laser Scan Micrometers use a low-power visible laser for measurement. The laser is a CLASS 2 EN/IEC60825-1 (2007) device. Warning and explanation labels, as shown below, are attached to the Laser Scan Micrometers as is appropriate.



Laser Scan Micrometer LSM-9506

SERIES 544 — Bench-top Type Non-contact Measuring System

- Bench-top type with integrated display unit includes many functions equivalent to the multi-function display unit.



SPECIFICATIONS

Order No.	**544-116-1A**
Type	inch/mm
Measuring range	.02" - 2.36"/ 0.5 - 60mm
Resolution	.000002" - .005"/ 0.00005 - 0.1mm
Repeatability*1	±0.6µm (±.00003")
Accuracy*2 (20°C)	±2.5µm (±.0001")
Positional error*3 (optical axis/scanning direction)	±2.5µm (±.0001") L: Displacement between workpiece center and optical axis center
Measuring area*4	±5x60mm (±.2x2.36")
Scanning rate	1600 scans/s
Laser wavelength	650nm (Visible)*5
Laser scanning speed	226m/s (8900" / s)
Display unit	16-digit dot matrix (upper column) + 7 segment 11-digit (lower column),guidance LEDs
Standard interface	RS-232C, Digimatic code output unit (1ch)
Optional interface	No
Power supply	120 V AC ±10%, 40VA, 60Hz
Operating environment	0 to 40°C, RH 35 to 85% (no condensation)

*1: Determined by the value of ±2σ (σ: standard deviation) when measuring ø10mm at the interval of 0.32 sec. (average 1024 times).
*2: Center of the measuring range for cylindrical workpieces outside diameter.
*3: An error of the outside diameter due to variation in workpiece position either in the optical axis direction or in the scanning direction.
*4: The area given by [optical axis direction]×[scanning direction].
*5: FDA Class II (544-116-1A)/IEC Class 2 semiconductor laser for scanning. (Maximum power: 1.0mW)

DIMENSIONS

Unit: mm

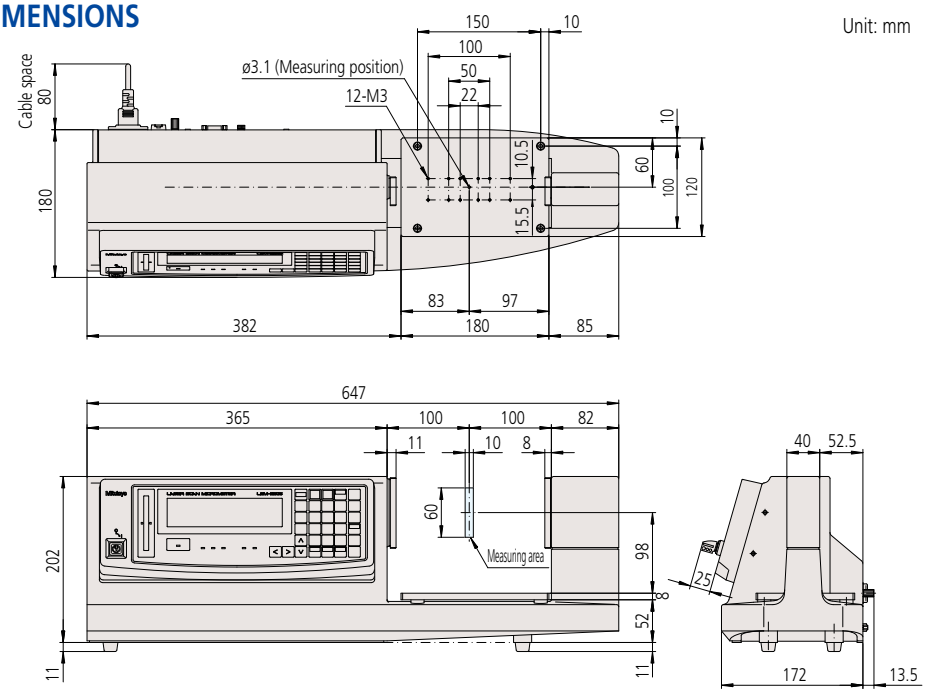

Optional Accessories

02AGD170
Calibration gage set (ø1.0mm, ø60mm)



02AGD680 Adjustable workstage
02AGD580 Center support*
02AGD590 Adjustable V-block*
936937 SPC output cable (1m)
937179T Footswitch
264-016 USB input tool for spreadsheets (SPC cable also required)

*Use with an adjustable workstage.

*1: Determined by the value for ±2σ at the measurement interval of 0.32 sec.
*2: At the center of the measuring region.
*3: An error due to workpiece shift either in the optical axis direction or in the scanning direction. L= Distance between the center of workpiece and the center of optical axis (in mm or inches).
*4: The area given by measuring range on the optical axis x measuring range in the scanning direction.
*5: FDA Class II (**544-116-1A**) semiconductor laser for scanning (Maximum power: 1.0mW)

QUICKTOOL

QUICKTOOL is a free downloadable software program that makes programming the LSM-6200 quick and easy.
Basic data acquisition is also possible.
(Connecting cables to PC are optional)

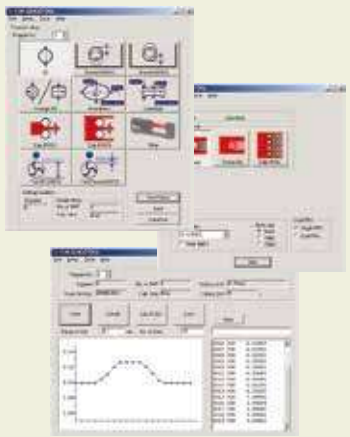

Laser safety

Mitutoyo Laser Scan Micrometers use a low-power visible laser for measurement. The laser is a CLASS 2 EN/IEC60825-1 (2007) device. Warning and explanation labels, as shown below, are attached to the Laser Scan Micrometers as is appropriate.



LSM-6200 Display Unit

SERIES 544 — Standard Display Unit for Laser Scan Micrometer

- 2-axis display unit enables 2 items to be displayed simultaneously.
- Capable of statistical analysis such as: average, maximum value, minimum value, range (max. - min.) and more.
- Segment measurement (7 points) or edge measurement (1 to 255 edge) can be selected.
- A function to eliminate abnormal values is standard.
- 100 tolerance values, preset values or settings can be stored.



SPECIFICATIONS

Order No.	**544-072A**
Type	inch/mm
Display	16-digit plus 11-digit fluorescent display and guide message LED
Segment	1 to 7 (1 to 3, transparent) or 1 to 255 edges*1
Averaging method	Arithmetic average: per 8 to 2048/ Moving average: per 32 to 2048 (Arithmetic average is per 16 to 2048 when using **544-531**, **544-532**)
Judgment	Selection from target value + tolerance, lower tolerance + upper tolerance, or 7 classes multi-limit tolerance zone.
Measurement mode	Standby, Single measurement, Continuous measurement
Statistical analysis	Maximum, Minimum, Average, Dispersion, σ (S.D)
Size	335 (W)×134 (H)×250 (D)mm
Power supply	120 V AC ±10%, 40VA, 60Hz
Standard I/F	RS-232C, Analog I/O
Optional I/F	Digimatic code output unit (2-ch), 2nd I/O analog I/F, BCD I/F
Operating environment	0 to +45°C, RH 35 to 85% (no condensation)
Others	Nominal setting, sample setting, selection of unnecessary digits, transparent object measurement*2, measurement of odd fluted parts, automatic measurement in edge mode, output timer, abnormal data elimination, SHL change, group judgment, simultaneous measurement, statistical processing, mastering, buzzer function, automatic workpiece detection (dimension/position)*1, zero-set/offset, dual measurement (optional)

*1: The measuring range will be 0.1mm to 2mm in the 1 to 255 edge measurement mode or when activating the automatic workpiece detection with **544-531**, **544-532**.
Each function has its combination limit.
*2: The measuring range is 50µm to 2mm when using **544-531**, **544-532**. For smaller range, contact your local Mitutoyo sales office.
** Cannot be connected to **544-496A**.
** Previous models such as **544-451** cannot be connected.

DIMENSIONS

Unit: mm

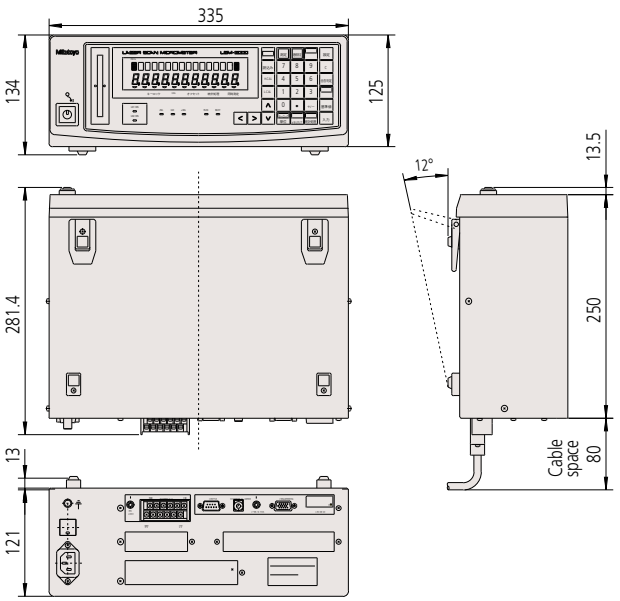

Optional Accessory

12AAA807
Serial cable (RS-232C null)

QUICKTOOL

QUICKTOOL is a free downloadable software program that makes programming the LSM-6200 quick and easy.
Basic data acquisition is also possible.
(Connecting cables to PC are optional)

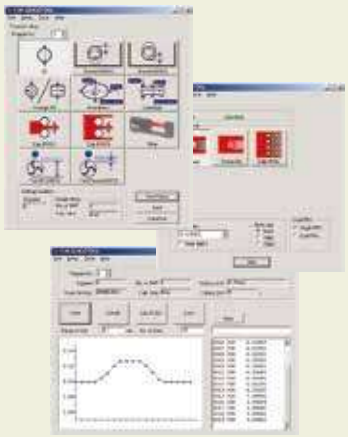

LSM-5200 Display Unit

SERIES 544 — Compact Display Unit for Real-time Multi-channel Measurement

- A compact controller which could be used for multi-unit system configurations.
- Capable of simple connection to a PC via USB.
- A panel-mount type display unit designed for the LSM-S series.
- Analog I/O and RS-232C is standard.
- Measurement of odd fluted parts, and simultaneous measurement / 2-program function included.



QUICKTOOL

QUICKTOOL is a free downloadable software program that makes programming the LSM-6200 quick and easy.
Basic data acquisition is also possible.
(Connecting cables to PC are optional)

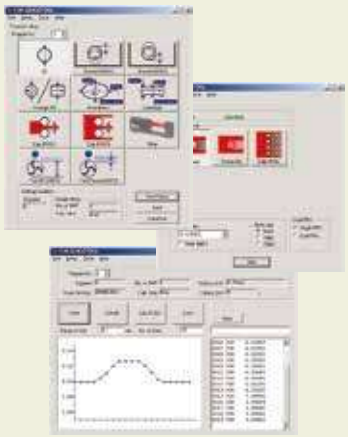

SPECIFICATIONS

Order No.	**544-047**
Display	9 digits plus 8 digits LED, guide message LED
Segment	1 to 7 (1 to 3, transparent) or 1 to 255 edges*1
Averaging method	Arithmetic average: from 4 to 2048; Moving average: from 32 to 2048 (Arithmetic average is from 16 to 2048 when using LSM-500S.)
Judgment	Selecting from target value ± tolerance value or lower limit/upper limit.
Measurement mode	Standby, Single measurement, Continuous measurement
Statistical analysis	Calculation result is output via USB or RS-232C.
External dimensions	144 (W)×72 (H)×197.1 (D)mm
Power supply*3	24V DC±10%, 1.3A or more (AC adapters are optional)
Standard I/F	USB2.0, RS-232C, I/O analog
Operating environment	0 to 40°C, RH 35 to 85% (no condensation)
Preservation environments	–20 to 70°C, RH 35 to 85% (no condensation)
Others	Measurement of odd fluted parts, simultaneous measurement, nominal setting, sample setting, selection of unnecessary digits, transparent object measurement*2 Automatic workpiece detection (dimension/position detected)*1, abnormal data elimination, mastering, statistical processing (when using USB, RS-232C), output timer, automatic measurement in edge mode, presetting note that every function is limited in its combination possibilities. See the user manual for details.
Mass	1.4 kg

*1: The measuring range will be 0.1mm to 2mm in the 1 to 255 edge measurement mode or when activating the automatic workpiece detection with **544-531**, **544-532**.
Each function has its combination limit.
*2: The measuring range is 50µm to 2mm when using **544-531**, **544-532**. For smaller ranges, contact your local Mitutoyo sales office.
*3: DC24V external power supply (commercial item) is required separately.
Note 1: Cannot be connected to **544-496A**.
Note 2: Previous models such as **544-451** cannot be connected.
Note 3: For USB communication with a PC, a dedicated device driver is required. For details, contact your local Mitutoyo sales office.

DIMENSIONS

Unit: mm

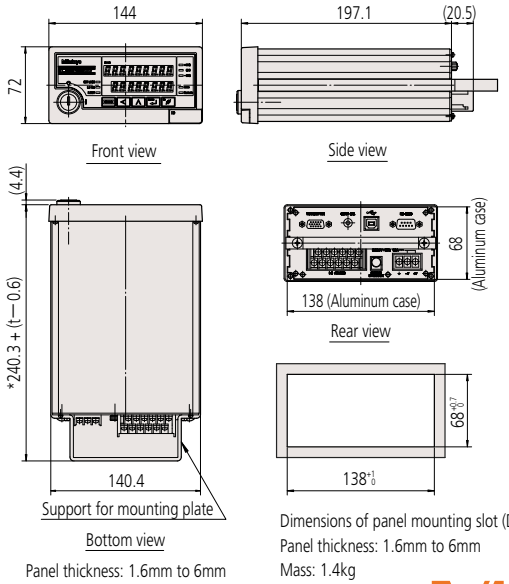

Panel thickness: 1.6mm to 6mm

Dimensions of panel mounting slot (DIN 43 700-144x76)
Panel thickness: 1.6mm to 6mm
Mass: 1.4kg

Mitutoyo

Laser Scan Micrometer

SERIES 544 Optional Accessories

LSMPAK

- Software can import measurement data from multiple LSM-5200 display units to a PC, allowing a variety of measuring systems to be constructed.
- Capable of processing a maximum of 10 channels of measurement data (USB-HUB connection).
- Capable of calculation between channels, statistical analysis, file output of calculation results.
- Various display functions such as counter display, graph display, and calculation result are included.

* Refer to page G-42 for specifications of **LSM-5200**.

Sample Screen

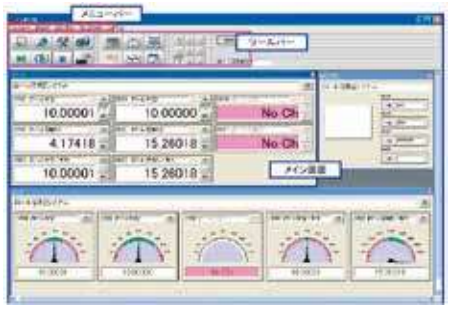

Measurement Examples

Printer roll multi-point simultaneous measurement

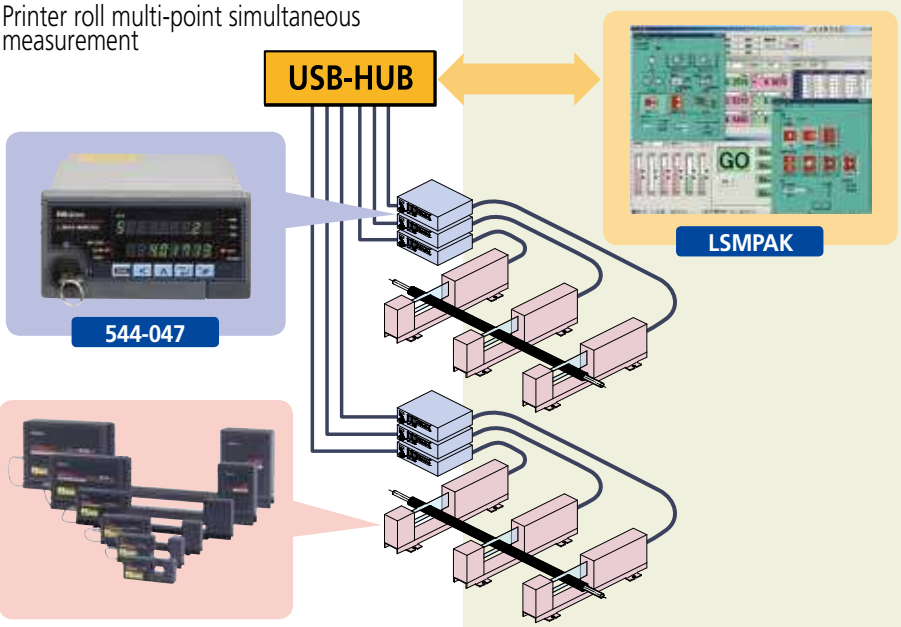

Commercially available products, such as USB hubs and cables, are available for connecting to the display unit.

SPECIFICATIONS

Order No.		**02NGA002** (English)
Applicable models		Display unit: **544-047** (Ver.1.004A or later) Measuring unit: LSM 500S Series
Display function		Max. 12 windows (counter, meter, chart, overall judgment)
Setup function		Presetting, data output, sample measurement, resolution select, judgment setting, measurement of odd number fluted parts, simultaneous measurement *Each function has its combination limit.
Measurement function		Single, continuous measurement, single automatic repetition
Calculation function		Arithmetic operation, maximum, minimum, range, average, total (any combination available)
Go/No-go judgment		3-step (–NG, GO, +NG)
Interface		USB2.0 (Hi-Speed communication recommended)
Maximum connection		10 units
Operating environment (PC)	OS	Windows XP, 7 (32-bit)
	CPU	Pentium 4, 2GHz or better recommended
	Memory	1GB or more
	HDD free space	500MB or more
	Display	124×768 dot, True Color (32-bit) or more recommended

Laser Scan Micrometer

SERIES 544 Optional Accessories

Calibration Gage Set



- Standard cylinder gage set suitable for calibration of Laser Scan Micrometers.
- Nominal gage diameters (1 to 160mm) are as given in specifications.

SPECIFICATIONS

For calibrating models		544-496A	544-532	544-534	544-536	544-538	544-540	544-542	544-116-1A
		LSM-902	LSM-500S	LSM-501S	LSM-503S	LSM-506S	LSM-512S	LSM-516S	LSM-9506
Set No.		02AGD180	02AGD110	02AGD120	02AGD130	02AGD140	02AGD150	02AGM300	02AGD170
Configuration (Order No.)	Stand	02AGD181	02AGD111	02AGD121	02AGD131	02AGD141	02AGD151	02AGM320	02AGD171
	Gages	ø1: 02AGD920 ø25: 02AGD963	ø0.1: 958200 ø2 : 958202	ø0.1: 958200 ø10: 229317	ø1: 02AGD920 ø30: 02AGD961	ø1: 02AGD920 ø60: 02AGD962	ø20: 229730 ø120: 234072	ø20: 229730 ø160: 02AGM303	ø1: 02AGD920 ø60: 02AGD962
	Carrying case	02AGD190	958203	958203	02AGD980	02AGD980	02AGD990	02AGM310	02AGD970

Workstage



Installation example (**LSM-902**)

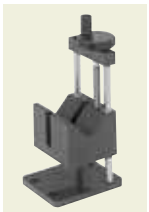

- Easy set-up and height adjustment enables high-precision measurement.

SPECIFICATIONS

Model	544-534 544-536 544-496A
Order No.	02AGD270

Adjustable workstage

- Vertical/horizontal slide mechanism enables easy measurement of various workpiece diameters.
- Best suited for quality assurance of high-precision pin gages.

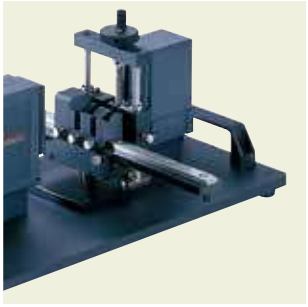

Measurement Examples

- Roller of copying machine

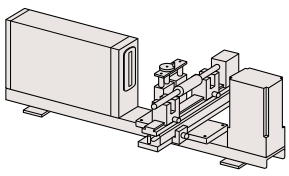

- Pin gage or plug gage

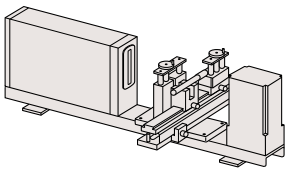

Basic configuration

Basic set	Order No.	Applicable model	Standard accessories	Measuring range (mm)	Horizontal stroke (mm)	Vertical stroke (mm)
(1) Main unit (2) V-block (3) Stop	02AGD280	544-496A	V-block (02AGD420), 2 pcs Stopper (02AGD430), 1 pc	0.1 - 25	130	47
	02AGD400	544-534		0.05 - 10	130	32
	02AGD490	544-536		0.3 - 30	200	35
	02AGD520	544-538	V-block A (02AGD550), 2 pcs V-block B (02AGD550), 1 pc V-block C (02AGD570), 1 pc	1 - 60	300	45
	02AGD370	544-116-1A		0.5 - 60	200	45
	02AGD680			0.5 - 60	300	45

* The stop is not included in the basic set for **544-538**, **544-116**.
• Optional parts for the adjustable workstage, such as center support, adjustable V-block (up/down) etc., are available.

Mitutoyo

Laser Scan Micrometer

SERIES 544 Optional Accessories

Guide pulley

- Used for supporting measurement of outside diameter of fine wire-like materials such as magnetic wire or fiber.



SPECIFICATIONS

Model	544-532	544-534
Order No.	02AGD200	02AGD210

Each measurement range is as follows:
544-532: ø5µm to ø1.6mm
544-534: ø50µm to ø2mm

For calibration, the calibration gage set for **544-532** (**No.02AGD110**) is required.

Air shield driven by air supply unit

- Air blows from the air outlet installed on the laser section to clear dust from adhering to the laser window.

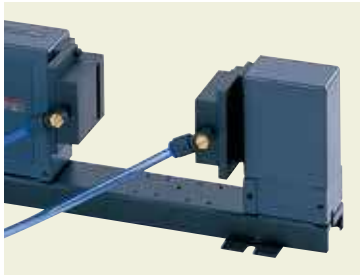

SPECIFICATIONS

Air supply unit	Air shield	Applicable models
No.957608	**No.02AGD220**	**544-532**
	No.02AGD230	**544-534**
	No.02AGD240	**544-536**
	No.02AGD250	**544-538**
	No.02AGD260	**544-540**

Air shield	Quantity
No.02AGD220/No.02AGD230	6
No.02AGD240	3
No.02AGD250/No.02AGD260	1

*1: Air shield and air supply unit are sold separately. An air supply unit includes a flow regulating valve and filter. Note, however, that clean air should be supplied.
*2: Air shield is supplied with 5m air tube (Outside diameter: 6mm).
*3: Air supply unit is compatible with air tube of 9mm internal diameter.

Extension Signal Cable / Extension Relay Cable

- Extension signal cables are necessary when the measuring unit and display unit are separated in operation. Extension relay cables are necessary when the optical section is separated in operation.

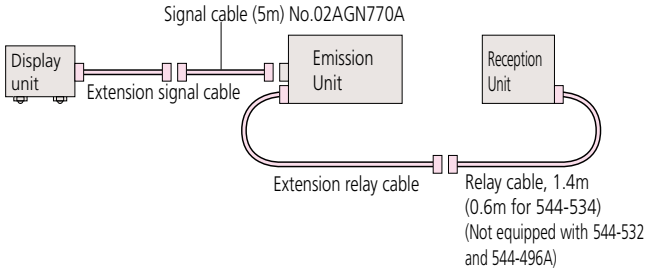

SPECIFICATIONS

Extension Signal Cable

Order No.	Cable length
02AGN780A	5m
02AGN780B	10m
02AGN780C	15m
02AGN780D	20m

Extension Relay Cable

Order No.	Cable length
02AGC150A	1m
02AGC150B	3m
02AGC150C	5m

* For **544-532** and **544-534** the allowable maximum length for signal cable is 20m; relay cable is 2m.
* For **544-536**, **544-538**, **544-540** and **544-542** the allowable maximum length for signal cable is 30m; relay cable is 5m.
* The maximum extension length of the signal cable and relay cable is 32m in total.
* Cannot be used with **544-496A**.

Laser Scan Micrometer

SERIES 544 Optional Accessories

Thermal printer DPU-414



- Measurement data can be printed.

SPECIFICATIONS

Order No.	**02AGD600B**
Printing method	Thermal dot matrix
Printing capacity	40 Columns (Normal)
Character configuration	9×8 dot matrix
Printing direction	Bidirectional
Interface	RS-232C
Power supply	AC 100-240V 50/60Hz (AC adapter)
Standard accessories	Printer cable 2m (**02AGD620A**), Printer paper 1 roll, AC adapter
Printer paper (optional)	Order **No.223663** (10-roll set)

Foot switch

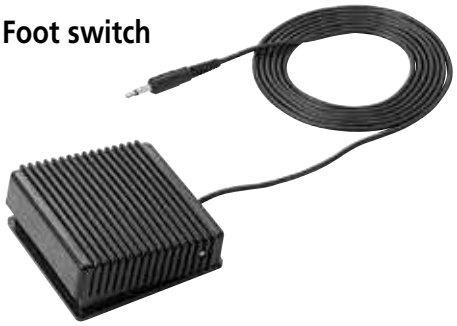

- **937179T**
- For LSM order **544-072A**, **544-496A**, **544-116-1A**

Interface for LSM6200, 6900

Optional Accessories

BCD Interface

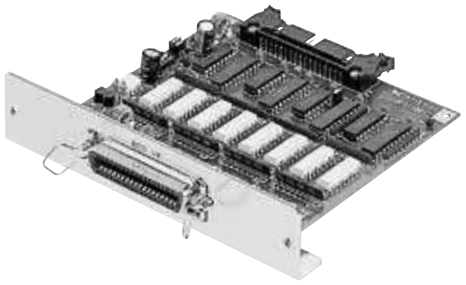

- Outputs measurement data in BCD output (7-digit) or HEX output.
- Data logic can be switched.
- Isolated I/O circuitry
- Available for **544-072A**, **544-496A**.

SPECIFICATIONS

Order No.	**02AGC910**
Standard accessories	Connector (DDK) **57-30360** (**No.214188**)

Mitutoyo

Laser Scan Micrometer

SERIES 544 Optional Accessories

Digimatic Code Output Unit



- 2-channel digimatic code output
- In simultaneous measurement, measurement data are output as follows:
  Program No.0 to No.4 in OUTPUT-1
  Program No.5 - No.9 in OUTPUT-2 (10 programs operated)
- 10 pin MIL type connector.
- Output cable is not supplied.
  Connecting cable (optional) 1m (**No.936937**)
- Available for **544-072A**, **544-496A**.

* Output is 6 digits of measurement data.
* Displaying 6th and 7th digit after the decimal point is not supported.

SPECIFICATIONS

Order No.	02AGC840

Dual Connection Unit



- Enables second unit connection to the **544-072A**. (both units must be the same model)

* Cannot be used for **544-496A**.

- Depending on the layout of the two measuring units, large-diameter measurement, XY measurement and parallel measurement are possible.
- Both of the measuring units and display units can be simultaneously operated.

SPECIFICATIONS

Order No.	02AGP150

2nd I/O Analog I/F

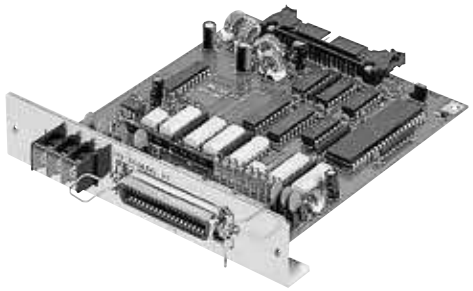

- I/O, analog output.
- Simultaneous measurement is supported by two pairs of go/no-go judgment outputs.
- Available for **544-072A**, **544-496A**.

SPECIFICATIONS

Order No.	02AGC880
Standard accessories	Connector (DDK) **57-30360** (**No.214188**)

Cable for BCD and 2nd I/O Simultaneous Mount

- Both BCD (**No.02AGC910**) and 2nd I/O analog I/F (**No.02AGC880**) can be mounted on **544-072A**, **544-496A** using this cable.

* If using this cable, the dual-connection unit (**No.02AGP150**) cannot be used.

SPECIFICATIONS

Order No.	02AGE060

DIMENSIONS

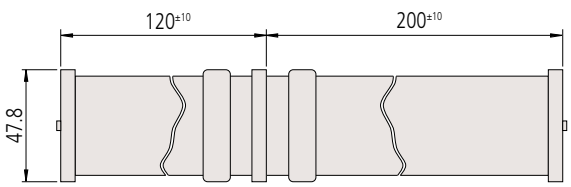

Unit: mm

XY Measurement

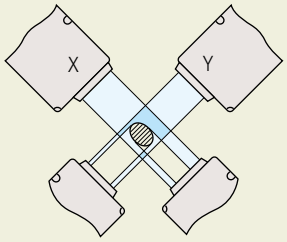

(X–Y): flatness
(X+Y)/2: average
* XY requires 10mm-interval.

Parallel Measurement

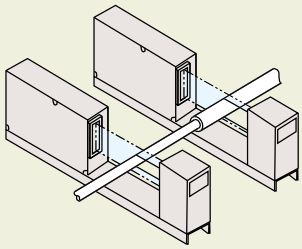

Large-diameter Measurement

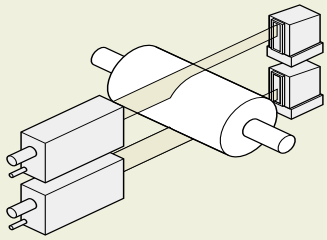

Compatibility

Your laser scan micrometer has been adjusted together with the ID unit, which is supplied with the measuring unit. The ID unit, which has the same code number and the same serial number as the measuring unit, must be installed in the display unit. This means that if the ID unit is replaced, the measuring unit can be connected to another corresponding display unit.

The workpiece and measuring conditions

Depending on whether the laser is visible or invisible, the workpiece shape, and the surface roughness, measurement errors may result. If this is the case, perform calibration with a master workpiece which has dimensions, shape and surface roughness similar to the actual workpiece to be measured.
If measurement values show a large degree of dispersion due to the measuring conditions, increase the number of scans for averaging to improve the measurement accuracy.

Electrical interference

To avoid operational errors, do not route the signal cable and relay cable of the laser scan micrometer alongside a high voltage line or other cables capable of inducing noise current in nearby conductors. Ground all appropriate units and cable shields.

Connection to a computer

If the laser scan micrometer is to be connected to an external personal computer via the RS-232C interface, ensure that the cable connections conform to the specification.

Laser safety

Mitutoyo laser scan micrometers use a low-power visible laser for measurement. The laser is a CLASS 2 EN/IEC60825-1 (2007) device. Warning and explanation labels, as shown below, are attached to the laser scan micrometers as appropriate.



Re-assembly after removal from the base

Observe the following limits when re-assembling the emission unit and reception unit to minimize measurement errors due to misalignment of the laser's optical axis with the reception unit.

Alignment within the horizontal plane

a. Parallel deviation between reference lines C and D:
X (in the transverse direction)

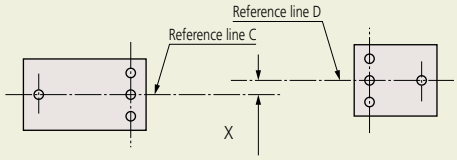

b. Angle between reference lines C and D: θx (angle)

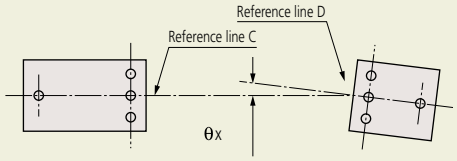

Alignment within the vertical plane

c. Parallel deviation between reference planes A and B: Y (in height)

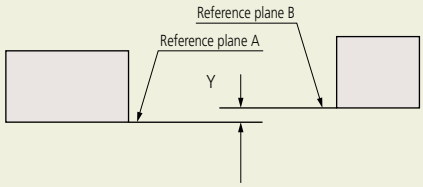

d. Angle between reference planes A and B: θy (angle)

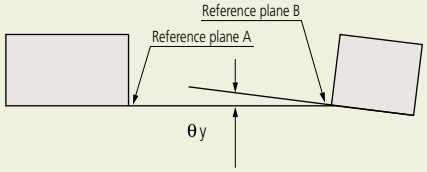

Allowable limits of optical axis misalignment

Model	Distance between Emission Unit and Reception Unit	X and Y	θx and θy
544-533, 544-534	68mm (2.68") or less	within 0.5mm (.02")	within 0.4° (7mrad)
	100mm (3.94") or less	within 0.5mm (.02")	within 0.3° (5.2mrad)
544-535, 544-536	130mm (5.12") or less	within 1mm (.04")	within 0.4° (7mrad)
	350mm (13.78") or less	within 1mm (.04")	within 0.16° (2.8mrad)
544-537, 544-538	273mm (10.75") or less	within 1mm (.04")	within 0.2° (3.5mrad)
	700mm (27.56") or less	within 1mm (.04")	within 0.08° (1.4mrad)
544-539, 544-540	321mm (12.64") or less	within 1mm (.04")	within 0.18° (3.6mrad)
	700mm (27.56") or less	within 1mm (.04")	within 0.08° (1.4mrad)
544-541, 544-542	800mm (31.50") or less	within 1mm (.04")	within 0.09° (1.6mrad)

Mitutoyo Quality











People – Quality starts with our people. Our team is comprised of the best and the brightest in the industry.

Confidence – Confidence you have each time you rely on a Mitutoyo product.

Reliability – Reliability of the product that you use many times every day.

Accuracy – Accuracy you need to preserve tight machining tolerances.

Relationship – Relationship you have formed with Mitutoyo staff and distributors.

Longevity – Longevity of a tool or instrument that maintains factory specifications.

Savings – Savings that are realized by implementing metrology solutions that reduce production costs.

Feel – Feel of a caliper or micrometer that you have come to expect.

Pride – Pride you feel when you produce the best manufactured product possible.



Digimatic Scale Units



Linear Scales



2D Image Correlation Encoder

AT1100

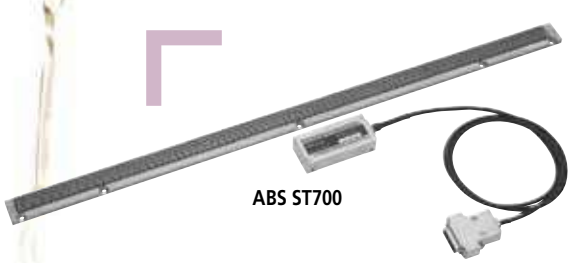

ABS ST700



MICSYS-SA1

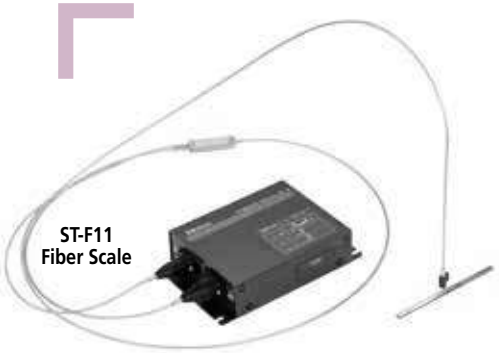

ST-F11
Fiber Scale

INDEX

Digimatic Scale Units	
SD ABSOLUTE Digimatic Scale Units	H-2,3
ABSOLUTE Digimatic Scale Units	H-4,5
Quill Kit with Absolute Encoder	H-6
KA-200 Counter	H-7
KLD200 Counter	H-7
Linear Scales	
Linear Scale Counter	H-8
Digital Readout/ DRO packages 2-Axis/3-Axis Travels	H-9
Linear Scales System Diagram	H-10,11
Linear Scales ABS AT1100	H-12
Linear Scales ABS AT300	H-13
Linear Scales ABS AT715	H-14
Linear Scales ABS AT500	H-15
Linear Scales ABS ST700	H-16
Linear Scales ABS ST1300	H-17
MICSYS	H-18
Linear Scales AT103	H-19
Linear Scales AT113	H-20
Linear Scales AT112-F	H-21
Linear Scales AT116	H-22
Linear Scales AT402E	H-23
Linear Scales AT203	H-24
Linear Scales AT216-T / AT217-TL	H-25
AT211-A (Multipoint mounting), AT211-B (Double-end mounting)	H-26
Linear Scales ST24	H-27
Linear Scales ST422	H-28
Linear Scales ST46-EZA	H-29
Linear Scales ST36	H-30
Fiber Scale ST-F11	H-31,32
Pulse Signal Interface Unit PSU-200	H-33
Quick Guide to Precision Measuring Instruments Linear Scales	H-34,35



ABS AT500-S

ABS AT500-H

Mitutoyo

SD ABSOLUTE Digimatic Scale Units

SERIES 572



IP66 Horizontal single-function type (Water-proof type)
572-602 SD-20G



Horizontal single-function type
572-202-20 SD-20DX



Horizontal multi-function type
572-461 SD-15E



Vertical single-function type
572-303-10 SDV-30D

Vertical multi-function type
572-561 SDV-15E

ABSOLUTE™

Mitutoyo guarantees the product quality. Mitutoyo guarantees the product safety.
PROPRIETARY INSPECTION CERTIFICATE

- **SD** series facilitates mounting on jigs, tools and small machine tools to enable accurate positioning.
- Built-in absolute scale including the ABS point requires no zero-set every time the power is turned on. In addition, reliability has improved thanks to elimination of overspeed errors.
- Horizontal or vertical display according to the scale mounting direction.
- The dust resistance and the environmental resistance of the display has improved. The **SD-G** series offers dust/water protection level IP66.
- Long battery life for easier maintenance.
- **EC** counters are available as external display units.
- Equipped with an output port to transfer measurement data. This allows implementation in control systems and gaging systems.

Applications

Machine table position

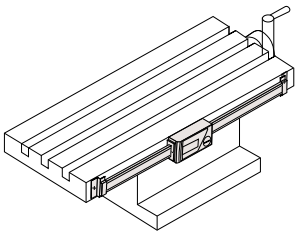

Drilling machine stroke position

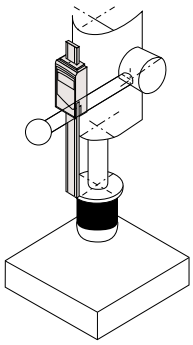

Focus setting on optical instruments

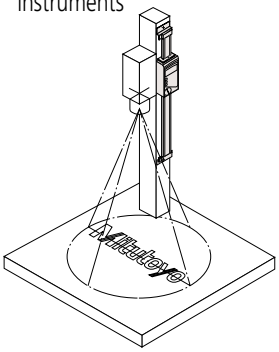

Special applications

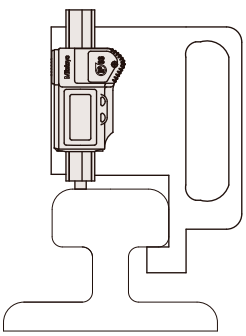

As a measurement jig for outdoor use (SD-G)

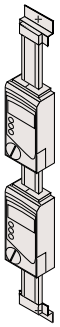

Detector head mechanism

Please contact Mitutoyo for other special orders.

Functions

- **ABS** (Absolute) measurement function
- **INC** (Incremental) measurement function
- Zero-setting function
- Presetting function (2 preset values can be set. Not available for **SD-G**, **SD-D**, **SDV-D**)
- Double reading function (Available only for **SD-F** or **SDV-F**)
- Direction switch function
  Not available for **SD-G**, **SD-D**, **SDV-D**, **SD-F**, **SDV-F**)
- Hold function*
- Measurement value composition error alarm
- Low-battery alarm
- Output function

* To activate the hold function when using **SD-D** or **SDV-D**, an optional hold unit is required. Simultaneous activation with the output function is not available. **SD-G** are also available to special order.

* These units use 1.5V silver oxide cells for the power supply. Therefore, when the units are directly fixed to the frame of a machine tool that requires a high voltage, malfunction such as display digit fluctuations and errors may occur. The countermeasure examples are described in the user manuals provided.

System Diagram

[Scale units]

Single-function type with high dust/water resistance

SD-G



Single-function type

SD-D (Horizontal)



SDV-D (Vertical)



Multi-function type

SD-E (Horizontal)



SDV-E (Vertical)



Multi-function type (double reading)

SD-F (Horizontal)



SDV-F (Vertical)



*2

[Display units]

EC Counter*3

No.542-007A



Refer to page G-20 for details.

Tolerance judgment output*1

*3

Digimatic mini-processor

DP-1VR

No.264-504-5A



Palm-sized printer for printing and statistical analysis

*3

Multiplexer

MIG-4USB

No.64AAB387



Interface unit for the RS-232C/USB conversion and output RS-232C/USB output

RS-232C/USB output

*3

Input Tool (USB keyboard signal conversion model)

No.264-016



USB Interface unit that converts and transfers data into spreadsheets

USB keyboard signal conversion

* Connection to an RS-232C conversion type (**IT-007R**) or a PS/2 keyboard signal conversion type (**IT-005D**) input tool is also available.

Connecting cable with the water-proof type output switch*2 40″/ 1m : **No.05CZA624**
80″/ 2m : **No.05CZA625**

Connecting cable with the output switch 1m : **No.959149**
2m : **No.959150**

Connecting cable with the output switch

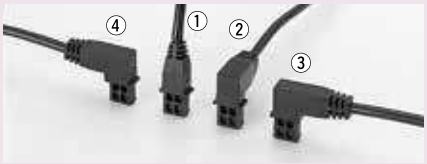

① 40″/ 1m : **No.905338**
80″/ 2m : **No.905409**

② 40″/ 1m : **No.905689**
80″/ 2m : **No.905690**

③ 40″/ 1m : **No.905691**
80″/ 2m : **No.905692**

④ 40″/ 1m : **No.905693**
80″/ 2m : **No.905694**

Connecting cable 40″/ 1m : **No.936937**
80″/ 2m : **No.965014**

* 1: Select the tolerance judgment output or digimatic output when setting the parameters.
* 2: Connecting cable with the water-proof type output switch can be used only for **SD-G** or Water-proof Digital Caliper **CD-15/20/30PM** equipped with external output function.
* 3: Connecting of **SD** series and **DP-1VR/MIG-UUSB/IT-012U** is also available without passing through the EC counter.
In this case, connect these units and **SD** series with the cables used for the connection with the **EC** counter.

Mitutoyo

ABSOLUTE Digimatic Scale Units

SERIES 572

SPECIFICATIONS

Type	Unit spec.	Order No.	Model	Range	Resolution	Accuracy	Repeatability	Battery life
Horizontal single-function type (Water-proof type)	Metric	**572-600**	**SD-10G**	0-100mm	0.01mm	0.03mm	.0005"/ 0.01mm	Approx. 13000 hours
		572-601	**SD-15G**	0-150mm				
		572-602	**SD-20G**	0-200mm				
	Inch/Metric	**572-613**	**SD-4"/10G**	0-4"/0-100mm	0.0005"/0.01mm	0.03mm/.001"		
		572-614	**SD-6"/15G**	0-6"/0-150mm				
		572-615	**SD-8"/20G**	0-8"/0-200mm				
Horizontal single-function type	Metric	**572-200-20**	**SD-10DX**	0-100mm	0.01mm	0.03mm		Approx. 20000 hours
		572-201-20	**SD-15DX**	0-150mm				
		572-202-20	**SD-20DX**	0-200mm				
		572-203-10	**SD-30D**	0-300mm		0.04mm		
	Inch/Metric	**572-210-20**	**SD-4"DX**	0-4"/0-100mm	0.0005"/0.01mm	0.03mm/.001"		
		572-211-20	**SD-6"DX**	0-6"/0-150mm				
		572-212-20	**SD-8"DX**	0-8"/0-200mm				
		572-213-10	**SD-12"D**	0-12"/0-300mm		0.04mm/.002"		
Horizontal multi-function type	Metric	**572-460**	**SD-10E**	0-100mm	0.01mm	0.03mm		Approx. 5000 hours
		572-461	**SD-15E**	0-150mm				
		572-462	**SD-20E**	0-200mm				
		572-463	**SD-30E**	0-300mm		0.04mm		
		572-464	**SD-45E**	0-450mm				
		572-465	**SD-60E**	0-600mm		0.05mm		
		572-466	**SD-80E**	0-800mm		0.06mm		
		572-467	**SD-100E**	0-1000mm		0.07mm		
	Inch/Metric	**572-470**	**SD-4"E**	0-4"/0-100mm	0.0005"/0.01mm	0.03mm/.001"		
		572-471	**SD-6"E**	0-6"/0-150mm				
		572-472	**SD-8"E**	0-8"/0-200mm				
		572-473	**SD-12"E**	0-12"/0-300mm		0.04mm/.002"		
		572-474	**SD-18"E**	0-18"/0-450mm				
		572-475	**SD-24"E**	0-24"/0-600mm		0.05mm/.002"		
		572-476	**SD-32"E**	0-32"/0-800mm		0.06mm/.0025"		
		572-477	**SD-40"E**	0-40"/0-1000mm		0.07mm/.0025"		
Horizontal multi-function type (equipped with double reading function)	Metric	**572-480-10**	**SD-10F**	0-100mm	0.01mm	0.03mm		Approx. 5000 hours
		572-481-10	**SD-15F**	0-150mm				
		572-482-10	**SD-20F**	0-200mm				
		572-483-10	**SD-30F**	0-300mm		0.04mm		
		572-484-10	**SD-45F**	0-450mm				
		572-485-10	**SD-60F**	0-600mm		0.05mm		
		572-486-10	**SD-80F**	0-800mm		0.06mm		
		572-487-10	**SD-100F**	0-1000mm		0.07mm		
	Inch/Metric	**572-490-10**	**SD-4"F**	0-4"/0-100mm	0.0005"/0.01mm	0.03mm/.001"		
		572-491-10	**SD-6"F**	0-6"/0-150mm				
		572-492-10	**SD-8"F**	0-8"/0-200mm				
		572-493-10	**SD-12"F**	0-12"/0-300mm		0.04mm/.002"		
		572-494-10	**SD-18"F**	0-18"/0-450mm				
		572-495-10	**SD-24"F**	0-24"/0-600mm		.002"/0.05mm		
		572-496-10	**SD-32"F**	0-32"/0-800mm		.0025"/0.06mm		
		572-497-10	**SD-40"F**	0-40"/0-1000mm		.0025"/0.07mm		
Vertical single-function type	Metric	**572-300-10**	**SDV-10D**	0-100mm	0.01mm	0.03mm		Approx. 20000 hours
		572-301-10	**SDV-15D**	0-150mm				
		572-302-10	**SDV-20D**	0-200mm				
		572-303-10	**SDV-30D**	0-300mm		0.04mm		
	Inch/Metric	**572-310-10**	**SD-4"D**	0-4"/0-100mm	0.0005"/0.01mm	0.03mm/.001"		
		572-311-10	**SD-6"D**	0-6"/0-150mm				
		572-312-10	**SD-8"D**	0-8"/0-200mm				
		572-313-10	**SD-12"D**	0-12"/0-300mm		0.04mm/.002"		
Vertical multi-function type	Metric	**572-560**	**SDV-10E**	0-100mm	0.01mm	0.03mm		Approx. 5000 hours
		572-561	**SDV-15E**	0-150mm				
		572-562	**SDV-20E**	0-200mm				
		572-563	**SDV-30E**	0-300mm		0.04mm		
		572-564	**SDV-45E**	0-450mm				
		572-565	**SDV-60E**	0-600mm		0.05mm		
		572-566	**SDV-80E**	0-800mm		0.06mm		
		572-567	**SDV-100E**	0-1000mm		0.07mm		
	Inch/Metric	**572-570**	**SDV-4"E**	0-4"/0-100mm	0.0005"/0.01mm	.001"/0.03mm		
		572-571	**SDV-6"E**	0-6"/0-150mm				
		572-572	**SDV-8"E**	0-8"/0-200mm				
		572-573	**SDV-12"E**	0-12"/0-300mm		.002"/0.04mm		
		572-574	**SDV-18"E**	0-18"/0-450mm				
		572-575	**SDV-24"E**	0-24"/0-600mm		.002"/0.05mm		
		572-576	**SDV-32"E**	0-32"/0-800mm		.0025"/0.06mm		
		572-577	**SDV-40"E**	0-40"/0-1000mm		.0025"/0.07mm		
Vertical multi-function type (equipped with double reading function)	Metric	**572-580-10**	**SDV-10F**	0-100mm	0.01mm	0.03mm		Approx. 5000 hours
		572-581-10	**SDV-15F**	0-150mm				
		572-582-10	**SDV-20F**	0-200mm				
		572-583-10	**SDV-30F**	0-300mm		0.04mm		
		572-584-10	**SDV-45F**	0-450mm				
		572-585-10	**SDV-60F**	0-600mm		0.05mm		
		572-586-10	**SDV-80F**	0-800mm		0.06mm		
		572-587-10	**SDV-100F**	0-1000mm		0.07mm		
	Inch/Metric	**572-590-10**	**SDV-4"F**	0-4"/0-100mm	0.0005"/0.01mm	.001"/0.03mm		
		572-591-10	**SDV-6"F**	0-6"/0-150mm				
		572-592-10	**SDV-8"F**	0-8"/0-200mm				
		572-593-10	**SDV-12"F**	0-12"/0-300mm		.002"/0.04mm		
		572-594-10	**SDV-18"F**	0-18"/0-450mm				
		572-595-10	**SDV-24"F**	0-24"/0-600mm		.002"/0.05mm		
		572-596-10	**SDV-32"F**	0-32"/0-800mm		.0025"/0.06mm		
		572-597-10	**SDV-40"F**	0-40"/0-1000mm		.0025"/0.07mm		



Note: Response speed is unlimited

Type

Horizontal type example



Vertical type example



DIMENSIONS

Unit: mm

SD-G

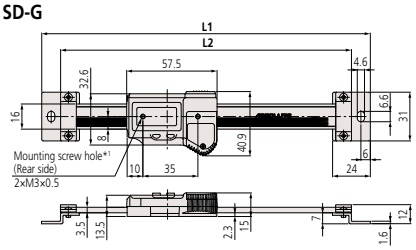

SD-DX

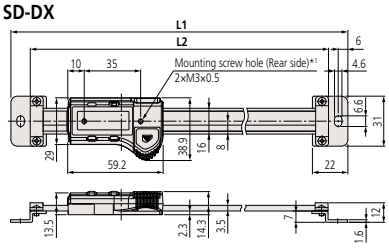

SD-D

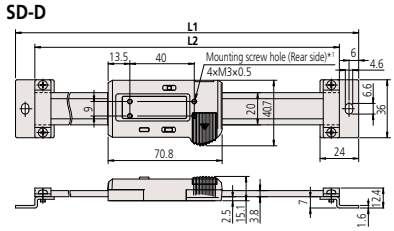

SDV-D

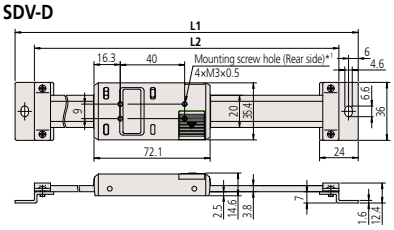

SD-E (to 300mm) / **SD-F** (to 300mm)

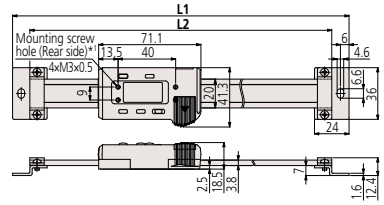

SD-E (450 to 1000mm) / **SD-F** (450 to 1000mm)

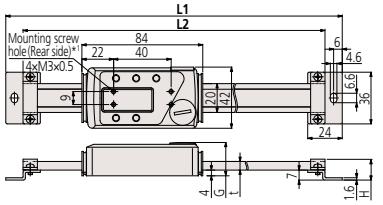

SDV-E (to 300mm) / **SDV-F** (to 300mm)

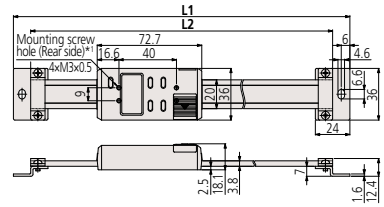

SDV-E (450 to 1000mm) / **SDV-F** (450 to 1000mm)

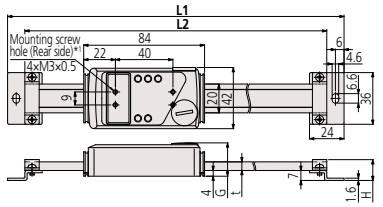

*1: Refer to the dimension table for details of the depth including the screw on the rear of the display.

SPECIFICATIONS

Model	Range (mm)	Dimensions(mm)					Depth including the screw on the rear of the display	Mass (g)
		L1	L2	t	G	H		
SD-G	100	209	185	—	—	—	Less than 2mm	390
	150	259	235	—	—	—		410
	200	311	287	—	—	—		430
SD-DX	100	209	185	—	—	—		230
	150	259	235	—	—	—		250
	200	311	287	—	—	—		270
SD-30D	300	444	420	—	—	—		370
SD-E SD-F	100	244	220	—	—	—		250
	150	294	270	—	—	—		280
	200	344	320	—	—	—		310
	300	444	420	—	—	—		370
	450	594	570	6	23.2	14.6	Less than 3mm	760
	600	774	750					900
	800	974	950	10	27.2	18.6		1710
	1000	1174	1150					2040
SDV-D	100	244	220	—	—	—	Less than 2mm	250
	150	294	270	—	—	—		280
	200	344	320	—	—	—		310
	300	444	420	—	—	—		370
SDV-E SDV-F	100	244	220	—	—	—		250
	150	294	270	—	—	—		280
	200	344	320	—	—	—		310
	300	444	420	—	—	—		370
	450	594	570	6	23.2	14.6	Less than 3mm	760
	600	774	750					900
	800	974	950	10	27.2	18.6		1710
	1000	1174	1150					2040

Mitutoyo

Quill Kit with ABSOLUTE Encoder

Easy Installation Fits Most Vertical Knee Mills

FEATURES

- Easy to read LCD with resolution of .0005"/0.01mm. 0 -5" travel inch/mm
- Push button controls for inch/mm, zero-set and on/off.
- Powered by a single SR-44 battery which lasts about 1 year with normal use.
- SPC Output for data transmission to data processors or a remote display.

SPECIFICATIONS

Order No.	Description
053906B	Digimatic Quill Kit complete with brackets & scale for Bridgeport-type machines.

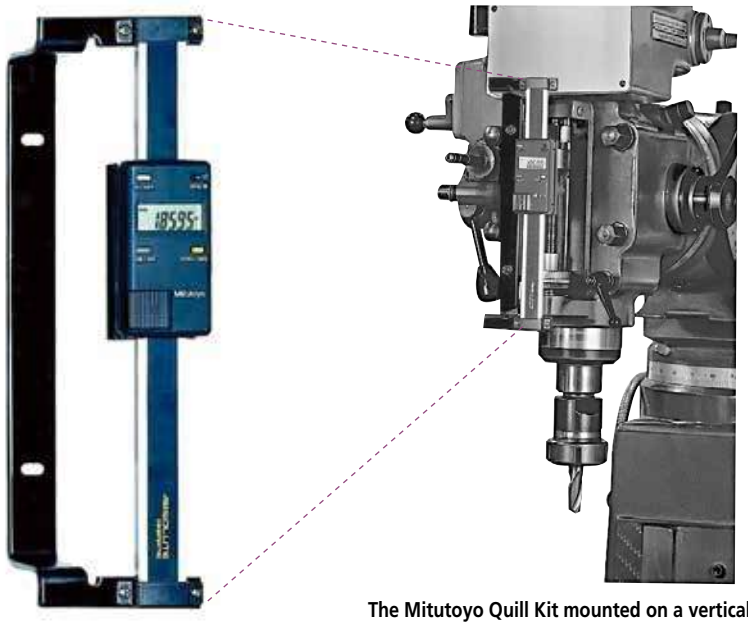

The Mitutoyo Quill Kit mounted on a vertical mill.

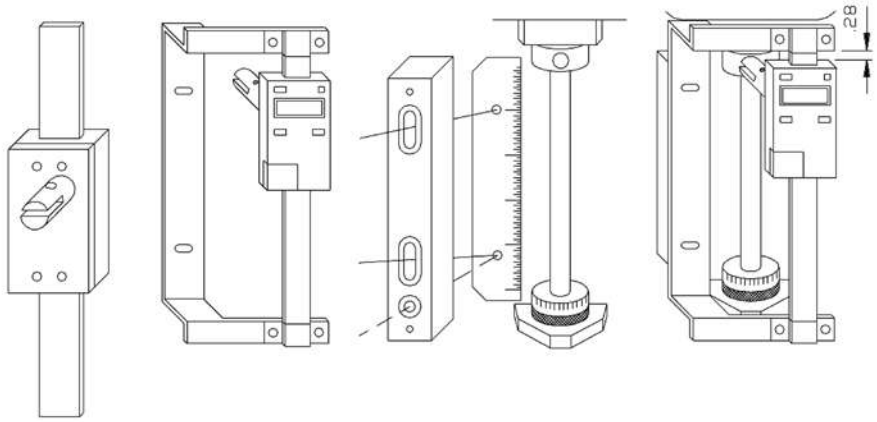

Optional Accessories

905338: SPC cable (40" / 1m standard)
905409: SPC cable (80" / 2m standard)
264-504-5A: DP-1VR data processor, 120V AC
02AZD810D: U-Wave-R (wireless receiver)
02AZD730D: U-Wave-T/IP67 type (wireless transmitter)
02AZD790F: U-Wave connecting cable F
02AZE200: U-Wave-T installation brackets kit

KA-200 Counter

SERIES 174 — Standard Type

- High performance, low cost 2 & 3 axis counter
- Absolute and incremental modes (10 presets each)
- Non-linear and linear error compensation
- Adjustable high-brightness, high-refresh rate LED displays
- Calculator function
- Outputs data into spreadsheets (optional USB card)



174-183A

DIMENSIONS

Unit: mm

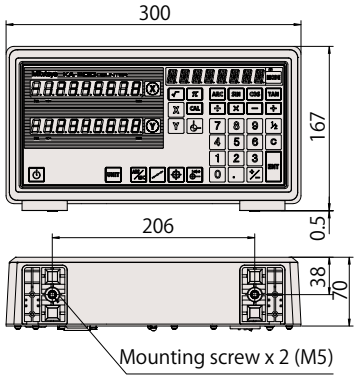

SPECIFICATIONS

Order No.	174-183A	174-185A
Model	2-axis KA-212 Counter	3-axis KA-213 Counter
Resolution	With AT100 Series: 0.05 - 0.0001 mm, .02" - .000005" With AT715: 0.01 - 0.0005 mm, .02" - .000020"	
Scale input ports	2 or 3*	
Display type / digit	7-segment, 8-digit + sign + 8-character alphabet LED display, 14.2mm character height	
Output (optional)	RS-232C / USB	
Macro functions	Rectangular drilling and round milling newly added	
Main features	Feed speed display; taper machining function; tool data; multi-point compensation; scale check function; calculation function	
Dimensions	Size (W×D×H) 30×168×70mm	

*2nd and 3rd axis display can be disabled

Standard Accessories

Power cable
Ground lead
Dust cover
Alternate button labels for lathe mode
Connector cap (Dsub-15)
User's manual
Warranty card

Optional Accessories

06AET993	Code out unit - USB output, RS232C output, Digimatic Input
06ACB393	Adapter for Linear gages with origin
06ACB913	Adapter for Linear gages without origin
06ACB391	Adapter for AT211 Linear Scales
06ACB392	Adapter for ST Series
09CAB231	Adapter for micrometer head
09AAA207	Adapter for previous model 6 pin linear scales
937179T	Foot switch to trigger USB output (06AET993 needed)
64AAB336	Foot switch to trigger RS-232C output (06AET993 needed)
06ACF941	Extension cable for remote load & zero (06AET993 needed)
965004	Foot switch to trigger RS-232C output (for 06ACF941 only)
937328	External load box (06AET993 & 06ACF941 needed)
936553	External zero box (06AET993 & 06ACF941 needed)
09EAA094	Counter cable RS232C for DP-1VR
64AAB519	RS232C output cable 6-ft. (25-9 pin)

KLD200 Counter

SERIES 174 — Special Purpose Type with Limit Signal Output

- Counter designed to signal when a linear scale displacement value and a preset limit value coincide.
- Two types of limit settings are available: 2-step (**KLD-212**) and 4-step (**KLD-214**).



174-147A
KLD-214

SPECIFICATIONS

Order No.	174-146A	174-147A
Model	KLD-212	KLD-214
Number of axes to be displayed	1 axis	
Number of limit values to be set	2	4
Resolution	(Changeable according to the parameter) When **AT100** series is connected: 0.05 to 0.0001mm When **AT715** is connected: 0.01 to 0.001mm	
Output	RS-232C (provided as standard)	
Display	7-segment LCD/ 7 digit*1	
Power supply voltage	120V AC, 60Hz	
Power consumption	25 VA	
Operating temperature/humidity range	0 to 45°C/ 20 to 80%	
Dimensions	13.1"(W)×6.42"(D)×8.1"(H) / 332 (W)×163 (D)×204 (H) mm	
Mass	6.62 lb. / 3.0kg	6.84 lb. / 3.1kg

*1: Count range when the minimum reading is 0.001mm: 99999.999 to –9999.999
Count range when the minimum reading is 0.005mm: 99999.995 to –9999.995

Mitutoyo

Linear scale counter

FUNCTIONS

Function \ Counter		KA-200 Counter	KLD-200 Counter
			
Zero-setting	ZERO	●	●
Preset	P.SET	●	●
Resolution setting	0.0005 / 0.01	●	●
Measurement direction setting		●	●
mm/inch conversion	mm / E	●	●
Diameter display	DIA	●	●
Scale reference point setting[-1]	SET	●	●
1/2 calculation	1/2	●	●
Coordinate system switching	N	●	—
Bolt-hole circle machining		●[-2]	—
Pitch machining		●	—
Zero approach machining (INC mode)		●	—
Addition of 2-scale data	Z1+Z2	●[-3]	—
Linearity error compensation		●	●
Pitch error compensation		●[-1]	—
Smoothing	1234	●	●
Memory backup		●	●
Expansion/contraction coefficient setting		—	●
Lower digit blanking out	123	●	●
External zero-setting	ZERO SET IN PUT	▲[-4]	●
RS-232C interface unit	RS-232C OUTPUT	▲[-4]	●
USB output	USB	▲[-5]	—
Limit signal output	LIMIT OUTPUT	—	●
Error message	Error	●	●

●: Standard function, ▲: Optional function, —: Not available
-1: Only available when connecting with AT100 series.
-2: Not available in single-axis use
-3: Only available for 3-axis model
-4: Code out unit (**06AET993**) is required.
-5: Text can be output by interface unit and foot switch

Adapter Cross Reference

(For adapting old linear scales to new counters, or new linear scales to old counters)

	Linear Scale Series No's.	Adapter No.	Counters
Old linear scales with 6 pin round connectors	FOR AT2-N, AT2, AT-11N, AT11, AT12N (529 Series)	**09AAA207**	All KA, KS, KC, UDR Series Counters with 15 pin connectors. (All 174 Series)
New linear scales w/15 pin D-Sub connectors	FOR AT102, AT103, AT111, AT112, AT113, AT115, AT116, AT181	**09AAA181**	For all .0001" resolution counters with seven pin round connectors
		09AAA181V*	APL Counter **164-660***, **164-661***, **164-662*** MPK-2L **983-352**
		09AAA198	For all .0005" resolution counters with six pin round connectors
		09AAA198V*	APL Counter **164-660***, **164-661***, **164-662***, **164-563***, **164-664***, **164-665*** PL and PL Zero Output Counter **164-252A**, **164-254A**, **164-295A**

* V = Vertical type

When only replacing one linear scale, you can use either horizontal or vertical type adapter.



09AAA207



09AAA198

Digital Readout/DRO packages
2-Axis/3-Axis Travels

For Milling, Lathes & Surface Grinding Systems



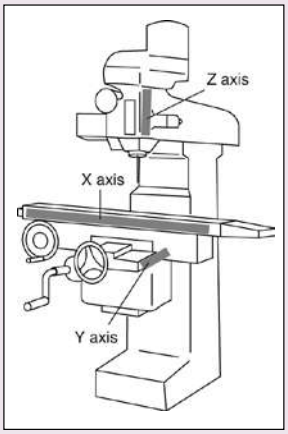

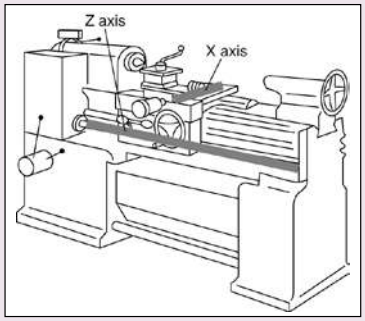

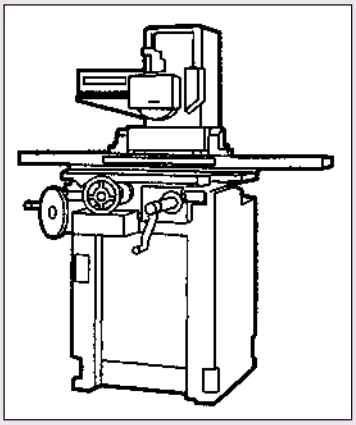

2-Axis, KA Counter Milling System

Package includes:
- KA-200 counter
- AT715 electromagnetic absolute linear scales
- Brackets for linear scales
- Display arm kit



X Axis Travel (AT715 Slim Electromagnetic)	Y Axis Travel (AT715 Slim Electromagnetic)			
	12" (539-805)	14" (539-806)	16" (539-807)	18" (539-808)
30" (539-814)	**64PKA058A**	**64PKA060A**	–	–
36" (539-816)	**64PKA059A**	–	**64PKA062A**	–
40" (539-817)	–	**64PKA061A**	**64PKA063A**	**64PKA064A**

3-Axis Milling Package (Z Axis: 6" Travel AT715)

Order No.	Description
64PKA065A	MILL pkg, 3-axis, ABS Scales, 12" x 30" x 6", w/3 axis KA Counter (174-185A)
64PKA066A	MILL pkg, 3-axis, ABS Scales, 12" x 36" x 6", w/3 axis KA Counter (174-185A)
64PKA067A	MILL pkg, 3-axis, ABS Scales, 16" x 36" x 6", w/3 axis KA Counter (174-185A)

2-Axis Lathe Package

Package includes:
- KA-200 counter
- AT116 and AT715 linear scale combinations (with cables)
- Mounting bracket kit
- Counter tray
- Additional extension cable (2m) included in 60" and 72" packages

Z-axis travel	X Axis Travel (AT116 Slim Glass Scale)					
	6"(539-272-30)	8"(539-273-30)	10"(539-274-30)	12"(539-275-30)	14"(539-276-30)	16"(539-277-30)
28" (539-813)	**64PKA035A**	–	–	–	–	–
30" (539-814)	**64PKA036A**	–	–	–	–	–
36" (539-816)	**64PKA037A**	–	–	–	–	–
40" (539-817)	**64PKA038A**	**64PKA039A**	**64PKA042A**	**64PKA046A**	**64PKA052A**	–
44" (539-818)	–	**64PKA040A**	**64PKA043A**	**64PKA047A**	**64PKA053A**	–
48" (539-819)	–	**64PKA041A**	**64PKA044A**	**64PKA048A**	**64PKA054A**	–
52" (539-820)	–	–	–	**64PKA049A**	**64PKA055A**	–
60" (539-822)	–	–	**64PKA045A**	**64PKA050A**	**64PKA056A**	**64PKA057A**
72" (539-825)	–	–	–	**64PKA051A**	–	–

2-Axis, KA Counter Grinder System

Package includes:
- KA-200 counter
- AT116 glass linear scales
- Mounting bracket kit
- Display arm kit

Vertical	Cross Side (AT116 Slim Glass Scale)			
	6" (539-272-30)	8" (539-273-30)	10" (539-274-30)	12" (539-275-30)
12"(539-275-30)	**64PKA026A**	**64PKA028A**	–	–
14"(539-276-30)	**64PKA027A**	**64PKA029A**	–	–
16"(539-277-30)	–	**64PKA030A**	–	–
18"(539-278-30)	–	–	**64PKA031A**	**64PKA033A**
20"(539-279-30)	–	–	–	**64PKA034A**
24"(539-281-30)	–	–	**64PKA032A**	–

Mitutoyo

Linear Scales

Linear Scale System Diagram

Designed to capture positional coordinates from slides on machine tools and precision instruments including semiconductor production equipment.

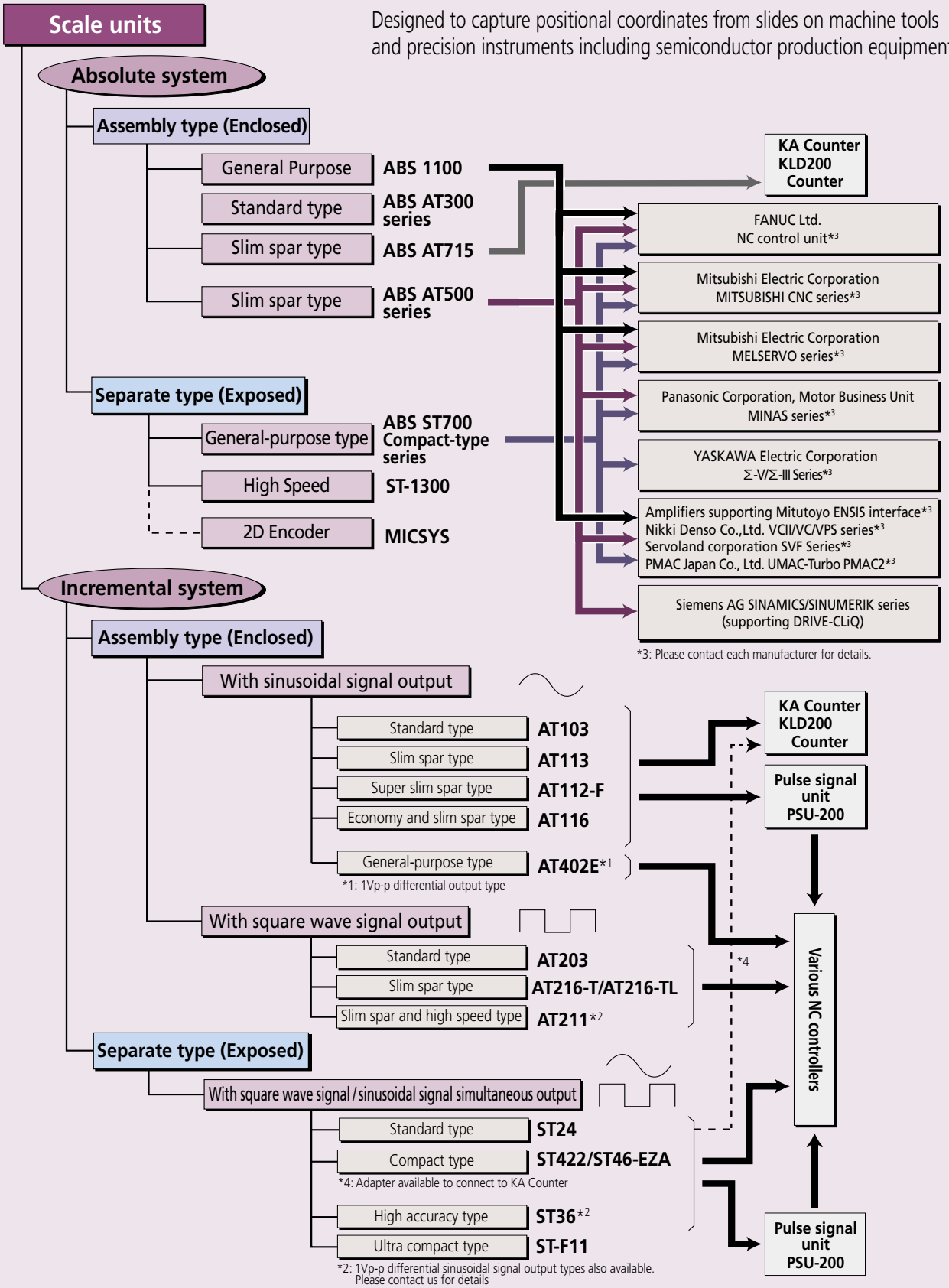

Name	Type	Page
AT1100	General-purpose Spar	H-12
AT300	Standard Spar	H-13
AT-715	Slim Spar (IP67)	H-14
AT500	Slim Spar	H-15
ABS ST700	General Purpose Compact type (Exposed)	H-16
ST1300	High Seep High Accuracy (Exposed)	H-17
MICSYS	2D Image Encoder (Exposed)	H-18
AT103	Standard	H-19
AT113	Slim Spar type	H-20
AT112-F	Super Slim part type	H-21
AT116	Economy and Slim Spar	H-22
AT402E	General-purpose	H-23
AT203	Standard type	H-24
AT216T/AT217-TL	Slim Spar	H-25
AT211	Slim spar type high speed	H-26
ST24	Standard Type (Exposed)	H-27
ST422/ST46-EZA	Compact type (Exposed)	H-28-29
ST36	High Accuracy type (Exposed)	H-30
ST-F11	Ultra Compact-Fiber scale (Exposed)	H-31-32

AT1100

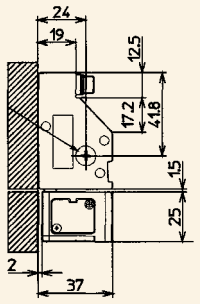

AT103 / AT300 / AT203

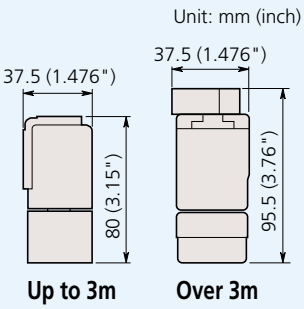

AT715

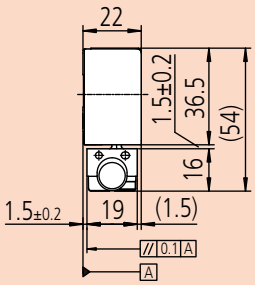

AT500

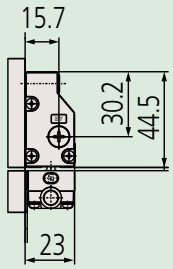

AT402E

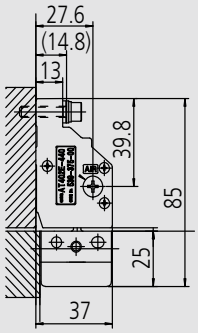

AT113 / AT116 / AT216T / AT217TL

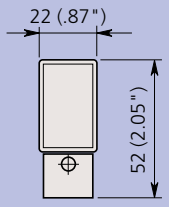

AT112F

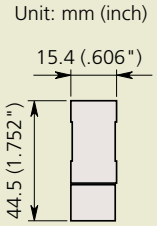

AT211

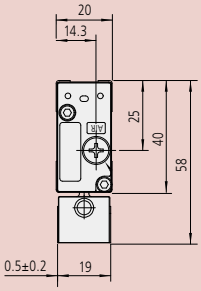

Mitutoyo

Linear Scales ABS AT1100

SERIES 539 — General Mount Type, robust dustproof / waterproof structure



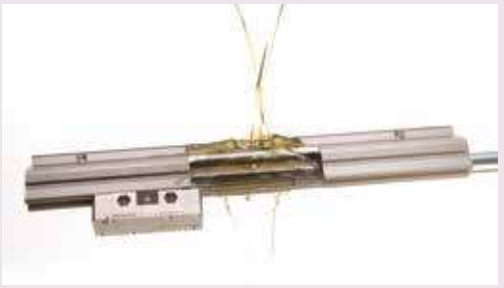

- Electromagnetic induction principle means scales are unaffected by most contamination.
- Absolute scales have eliminated the need for origin restoration and drastically reduced power consumption.
- Drawings are available on request.

SPECIFICATIONS

Model	ABS AT1100
Detection method	Electromagnetic induction
Maximum effective range	3040mm
Resolution	0.05μm
Accuracy (at 20 °C)	(3+5L/1000)μm L= 140 to 2040mm (5+5L/1000)μm L= 2240 to 3040mm
Maximum response speed	3 m/s
Cross-section size	85×37 (mm)
Thermal expansion coefficient	≈ 8±1.5x10^{-6} / K
Vibration resistance (at 55 to 2000Hz)	20g
Impact resistance (at 11ms, 1/2sin)	35g L=140 to 2040mm 30g L=2240 to 3040mm
Compatible interfaces *1	FANUC Corporation's Serial αi Interface (AT1153)
	Mitsubishi Electric Corporation's High-speed Serial Interface (AT1143)

*1: For details about connection of any applicable system, please be sure to contact each manufacturer for confirmation.

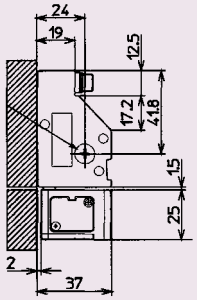

AT1100 Mounting Dimensions

FANUC		Mitsubishi		Effective Range (mm)
Order No.	Model	Order No.	Model	
559-100-53	AT1153-140	**559-100-43**	AT1143-140	140
559-101-53	AT1153-240	**559-101-43**	AT1143-240	240
559-102-53	AT1153-340	**559-102-43**	AT1143-340	340
559-103-53	AT1153-440	**559-103-43**	AT1143-440	440
559-104-53	AT1153-540	**559-104-43**	AT1143-540	540
559-105-53	AT1153-640	**559-105-43**	AT1143-640	640
559-106-53	AT1153-740	**559-106-43**	AT1143-740	740
559-107-53	AT1153-840	**559-107-43**	AT1143-840	840
559-108-53	AT1153-940	**559-108-43**	AT1143-940	940
559-109-53	AT1153-1040	**559-109-43**	AT1143-1040	1040
559-110-53	AT1153-1140	**559-110-43**	AT1143-1140	1140
559-111-53	AT1153-1240	**559-111-43**	AT1143-1240	1240
559-112-53	AT1153-1340	**559-112-43**	AT1143-1340	1340
559-113-53	AT1153-1440	**559-113-43**	AT1143-1440	1440
559-114-53	AT1153-1540	**559-114-43**	AT1143-1540	1540
559-115-53	AT1153-1640	**559-115-43**	AT1143-1640	1640
559-116-53	AT1153-1740	**559-116-43**	AT1143-1740	1740
559-117-53	AT1153-1840	**559-117-43**	AT1143-1840	1840
559-118-53	AT1153-2040	**559-118-43**	AT1143-2040	2040
559-119-53	AT1153-2240	**559-119-43**	AT1143-2240	2240
559-120-53	AT1153-2440	**559-120-43**	AT1143-2440	2440
559-121-53	AT1153-2640	**559-121-43**	AT1143-2640	2640
559-122-53	AT1153-2840	**559-122-43**	AT1143-2840	2840
559-123-53	AT1153-3040	**559-123-43**	AT1143-3040	3040

Linear Scales ABS AT300

SERIES 539 — Standard Type

ABSOLUTE™

- ABSOLUTE linear encoder incorporates both our unique electrostatic capacity and photoelectric technology.
  *Refer to page H-34 "Quick Guide to Precision Measuring Instruments" for details of the principle of the absolute linear scale.
- Drastically reduced power consumption since there are no backup batteries.
- Easy operation because no recalibration is required at startup or after a power failure.
- Suitable for position feedback in machinery requiring high-accuracy, high-speed control.
- Improved environmental resistance against mechanical vibration and noise.



SPECIFICATIONS

Model	ABS AT353	ABS AT343	ABS AT343A	ABS AT303	ABS AT303A
Applicable system	FANUC Ltd. NC Control unit	Mitsubishi Electric Corporation MITSUBISHI CNC series	Mitsubishi Electric Corporation MR-J3	Amplifiers supporting Mitutoyo ENSIS interface	
Resolution	0.05µm				
Maximum response speed	120m/min				
Effective range	4 to 120" / 100 to 3000mm				
Accuracy (20°C)*	(3+3L0/1000)µm, (5+5L0/1000)µm when the effective range is 1600mm or more				
Protection level	IP53				

* The indication accuracy does not include quantizing error. L0: Effective range (mm)
* A wide variety of special orders are available.

Dimensions

Effective range L0 (mm)	Maximum travel length L1 (mm)	Overall length L2 (mm)	Mounting block pitch L3 (mm)	Mounting block pitch L4 (mm)	No. of mounting blocks
100	120	230	65	100	2
150	170	280	65	150	
200	220	330	65	200	
250	270	380	65	250	
300	330	440	220	150	3
350	380	490	245	175	
400	430	540	270	200	
450	480	590	295	225	
500	540	650	325	250	
600	650	760	380	300	
700	760	870	435	350	
750	810	920	460	375	
800	860	970	485	400	
900	960	1070	535	450	
1000	1060	1170	585	500	

Effective range L0 (mm)	Maximum travel length L1 (mm)	Overall length L2 (mm)	Mounting block pitch L3 (mm)	Mounting block pitch L4 (mm)	No. of mounting blocks
1100	1160	1270	635	275	5
1200	1260	1370	685	300	
1300	1360	1470	735	325	
1400	1460	1570	785	350	
1500	1560	1670	835	375	
1600	1690	1800	900	400	
1700	1790	1900	950	425	
1800	1890	2000	1000	450	
2000	2100	2210	1105	335	7
2200	2300	2410	1205	370	
2400	2500	2610	1305	400	
2500	2600	2710	1355	315	9
2600	2700	2810	1405	325	
2800	2900	3010	1505	350	
3000	3050	3210	1605	375	

Mounting dimensions [ABS AT353/AT343(A)/AT303(A)]

Unit: mm

• Effective range 100 mm to 250mm

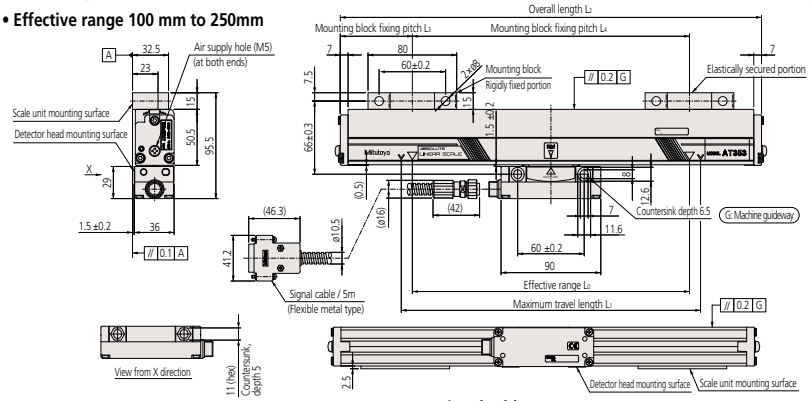

• ABS AT343A signal cable

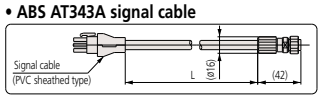

*The signal cable has set options.
(Part No.09BAA598A - C: 0.2m, 2m, 3m)

• Effective range 300mm to 3000mm

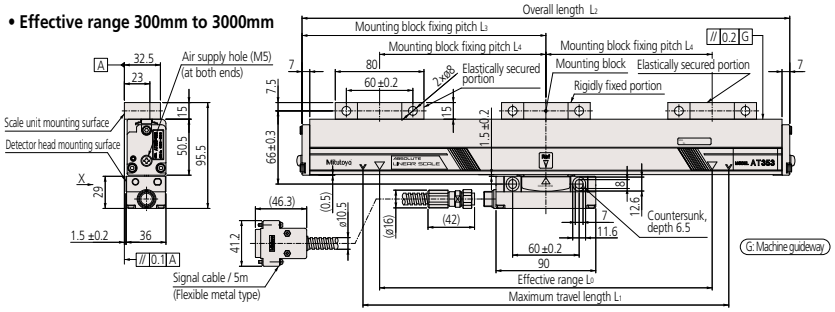

Mitutoyo

Linear Scales ABS AT715

SERIES 539 — Slim Spar Type



ABSOLUTE™

PROPRIETARY INSPECTION CERTIFICATE

- Electromagnetic induction principle means scales are unaffected by contamination.
- Absolute scales have eliminated the need for origin restoration and drastically reduced power consumption.
- Suitable for milling machines, XY tables, jigs, etc.

SPECIFICATIONS

Model	ABS AT715	
Detection method	Electromagnetic induction	
Resolution	.000020" - .001" (0.0005mm to 0.01mm) (on the **KA/KLD200** counter)	
Effective range	100 to 3000mm	
Accuracy (20°C)	±5μm (Lo: 100 to 500mm), ±7μm (Lo: 600 to 1800mm), ±10μm (Lo: 2000 to 3000mm) Lo: Effective range (mm)	
Maximum response speed	50m/min	
Protection level	IP67	
Sliding force	5N or less	
Signal cable	Standard accessory Refer to the dimension table shown below for the length.	
Extension cable (optional)	Length	Order No.
	2m 5m 7m	**09AAB674A** **09AAB674B** **09AAB674C**
Connectable counter	**KA** Counter/ **KLD200** Counter	

AT715		Effective range Lo inch/mm	Signal cable length (m)
Order No.	Model		
539-801	**ABS AT715-100**	4" /100mm	3.5
539-802	**ABS AT715-150**	6" /150mm	
539-803	**ABS AT715-200**	8" /200mm	
539-804	**ABS AT715-250**	10" /250mm	
539-805	**ABS AT715-300**	12" /300mm	
539-806	**ABS AT715-350**	14" /350mm	
539-807	**ABS AT715-400**	16" /400mm	
539-808	**ABS AT715-450**	18" /450mm	
539-809	**ABS AT715-500**	20" /500mm	
539-811	**ABS AT715-600**	24" /600mm	
539-813	**ABS AT715-700**	28" /700mm	
539-814	**ABS AT715-750**	30" /750mm	
539-815	**ABS AT715-800**	32" /800mm	
539-816	**ABS AT715-900**	36" /900mm	
539-817	**ABS AT715-1000**	40" /1000mm	5
539-818	**ABS AT715-1100**	44" /1100mm	
539-819	**ABS AT715-1200**	48" /1200mm	
539-820	**ABS AT715-1300**	52" /1300mm	
539-821	**ABS AT715-1400**	56" /1400mm	
539-822	**ABS AT715-1500**	60" /1500mm	
539-823	**ABS AT715-1600**	64" /1600mm	
539-824	**ABS AT715-1700**	68" /1700mm	
539-825	**ABS AT715-1800**	72" /1800mm	
539-860	**ABS AT715-2000**	80" /2000mm	
539-861	**ABS AT715-2200**	88" /2200mm	
539-862	**ABS AT715-2400**	96" /2400mm	7*1
539-863	**ABS AT715-2500**	100" /2500mm	
539-864	**ABS AT715-2600**	104" /2600mm	
539-865	**ABS AT715-2800**	112" /2800mm	
539-866	**ABS AT715-3000**	120" /3000mm	

*1: Combination of a 5m signal cable and a 2m extension cable

Optional Accessories

09AAB674A Extension cable 2m
09AAB674B Extension cable 5m
09AAB674C Extension cable 7m
174-183A 2-Axis KA Counter
174-185A 3-Axis KA Counter



174-183A

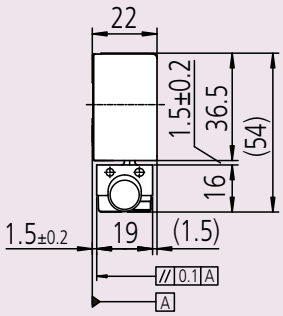

ABSOLUTE™

Linear Scales ABS AT500

SERIES 539 — Slim Spar Type

- Slim shape is suitable for space-saving designs.
- The high-rigidity **ABS AT500-S** series has vibration resistance, shock resistance and temperature control. The **ABS AT500-H** series offers excellent temperature control and high accuracy.
- Scale alarm display LED allows for easy maintenance.
- Supports the interfaces of various manufacturers, allowing a variety of system configurations.

SC Type

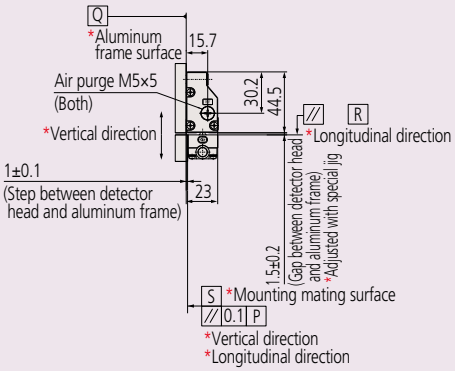



ABS AT500-S

IP53



ABS AT500-H

SPECIFICATIONS

	High-rigidity type	High-accuracy type	
Model	**ABS AT500-SC**	**ABS AT500-HC**	**ABS AT500-HL/HR**
Resolution	0.005μm*1/0.05μm		
Maximum response speed	150m/min (72m/min for the H series whose resolution is 0.005μm)		
Effective range	100 to 2200mm	100 to 1000mm	100 to 350mm
Accuracy (20°C)*2	(3+3L0/1000)μm	(2+2L0/1000)μm	
Reference point of expansion influenced by the temperature fluctuation	Center of the effective measuring length		Edge of the effective measuring length HL: "+" side of the absolute value HR: "−" side of the absolute value
Protection level	IP53		

*1: The exact value is 0.0048828125μm since the 20μm signal is divided by 4096.

Meaning of Model No.

ABS AT5□□□ - □□□ - □□

Resolution/Applicable system

Effective range

Model	Resolution	Applicable system
ABS AT553	0.05μm	FANUC Ltd. NC Control unit
ABS AT555	0.005μm	
ABS AT543	0.05μm	Mitsubishi Electric Corporation MITSUBISHI CNC series
ABS AT545	0.005μm	
ABS AT543A	0.05μm	Mitsubishi Electric Corporation MELSERVO series
ABS AT545A	0.005μm	
ABS AT573A	0.05μm	Panasonic Corporation, Motor Business Unit MINAS series*1
ABS AT503	0.05μm	Amplifiers supporting Mitutoyo ENSIS interface*1 (Nikki Denso Co., Ltd., Servoland corporation, PMAC Japan Co., Ltd.)
ABS AT503A		
ABS AT505	0.005μm	
ABS AT505A		
ABS AT524	0.01μm	Siemens AG SINAMICS/SINUMERIK series (supporting DRIVE-CLiQ)
ABS AT527	0.001μm	

Reference point of expansion on the scale unit influenced by temperature fluctuation*
C: Center of the effective range
L: "+" side of the absolute value
R: "−" side of the absolute value
* "**L**" or "**R**" is marked only for the high accuracy type.

Type of the scale unit
S: High rigidity type
H: High accuracy type
Note: "Reference point of expansion"
The scale unit expands or contracts influenced by the temperature fluctuation.
The mechanical reference point of expansion is defined as the reference point.

*ABS AT5 □□□
Transmission method
Nothing: Full duplex communication
A: Half-duplex communication

*1: Please contact each manufacturer for details.

Mitutoyo

Linear Scales ABS ST700

SERIES 579 — General-purpose Type



Scale base type

Glass scale type

SPECIFICATIONS

Model	ABS ST700	
Scale type	Scale base type	Glass scale type
Resolution	0.1µm (0.05µm to special order)	
Detection method	Electromagnetic induction ABS linear encoder	
Max. effective range	6000mm	1100mm
Accuracy (20°C)	5+(5L/1000)µm L: Effective range (mm)	3+(3L/1000)µm L: Effective range (mm)
Maximum response speed	5m/s	
Linear expansion coefficient	$(12.0\pm1.5)\times10^{-6}$/°C (When the material of the mounting components is steel or equivalent.)	$(8\pm1.0)\times10^{-6}$/°C
Power supply voltage	5V±10% (at the detection head) (Ripple + spike noise component should be less than 100mV.)	
Operating temperature/humidity range	0 to 50°C, RH 20 to 80%	
Storage temperature/humidity range	–20 to 70°C, RH 20 to 80%	

Meaning of Model No.

ABS ST7 0 8 A L - 100 A - R

Absolute type

Series name
Separate Type ABSOLUTE Linear Scale
ABS ST700 Compact-type series (Effective range ≤ 3m)
ABS ST700 Compact-type series (3.2m ≤ Effective range ≤ 6m)

Interface specification[*1]
0:Supports Mitutoyo ENSIS high-speed interface
ABS ST708A, **ST708AL**
4:Supports Mitsubishi Electric Corporation high-speed serial interface
ABS ST748, **ST748AL**, **ABS ST748**, **ST748L**
5:Supports FANUC Ltd. high-speed serial interface
ABS ST758, **ST758L**
7:Supports Panasonic Corporation, Motor Business Unit high-speed serial interface
ABS ST778A, **ST778AL**
8:Supports YASKAWA Electric Corporation high-speed serial interface
ABS ST788A, **ST788AL**

Detection head form and resolution
8: Form: 50mm (W)×28mm (D)×11mm (H)
Resolution: 0.1µm
9: 0.05µm resolution (to special orders)

Transmission method
A: 2-wire system
Nothing: 4-wire system

Nothing: 100mm to 3000mm
L: 3200mm to 6000mm

Effective range: 100mm to 6000mm

A: Scale base type
C: Glass scale type

Head cable outlet direction
R: Right side
L: Left side
U: Upper side
D: Lower side

Available Interfaces[*1]

FANUC Ltd. FS-i Series, Power Mate i Series
Mitsubishi Electric Corporation MELSERVO MR-J4/MR-J3 Series
Mitsubishi Electric Corporation CNC Series, MDS-D/MDS-DH Series
YASKAWA Electric Corporation Σ-V,Σ-III Series
Panasonic Corporation, Motor Business Unit MINAS-A5, A5L, A5N, A5NL, MINAS-A4, A4P, A4N, A4NL Series
Mitutoyo ENSIS[*2] Nikki Denso Co.,Ltd. VCII/VC/VPS series Servoland Corporation SVF Series PMAC Japan Co. Ltd. UMAC-Turbo PMAC2

*1 Be sure to contact each manufacturer for details of the applicable systems (availability of connection).
*2 ENSIS is a registered trademark of Mitutoyo Corporation.

ABSOLUTE™

PROPRIETARY INSPECTION CERTIFICATE

- Absolute measurement with exposed scales.
- Non-contact detection is optimal for high-speed and high-acceleration devices such as linear motors.
- Electromagnetic induction principle means scales are unaffected by water and oil contamination.
- The detector head is approximately 1/3 the previous model size: 50mm (W) × 28mm (D) × 11mm (H).
- Cable outlets can be in four directions, with mounting holes on the top and sides.
- Accuracy (5+5L/1000)µm, glass scale: (3+3L/1000)µm (previous models: (8+5L/1000)µm) L: Effective range (mm).
- Compatible with servo amplifiers from a range of companies (high-speed serial interfaces).
- Signal adjustment at installation is automatically performed with dedicated software.

Feedback cable

- Yaskawa Electric Corporation serial cable can be used as the feedback cable to connect to a Yaskawa Electric Corporation servo amplifier.
  Cable model number : JZSP-CLP- (03, 05, 10, 15, 20)
- For the feedback cable to connect to a Mitsubishi Electric Corporation MR-J2S/MR-J3, contact Mitutoyo with the following code numbers.

For the MR-J2S	5m :	No.06ACF116A
	10m :	No.06ACF116B
For the MR-J3	5m :	No.06ACF117A
	10m :	No.06ACF117B

ABSOLUTE™

Linear Scale ABS ST1300

SERIES 579 - High-speed, high-resolution Absolute Tape Scale

- 12m maximum effective length, 8-m/s max. response speed and 1nm minimum resolution.
- Extensive interface compatibility. See specifications below.
- Outstanding robustness against contamination compared to earlier photoelectric types by using a new detection principle.
- Choice between double-sided tape and tension mounting methods.
- Signal validation program facilitates mounting adjustment and maintenance.
- Applicable Interfaces: FANUC; Mitsubishi Electric; Yaskawa Electric; Panasonic; Mitutoyo ENSIS standard interface

- Any scale size drawings are available on request.

Double-end tension version



Double-sided adhesive mounting version

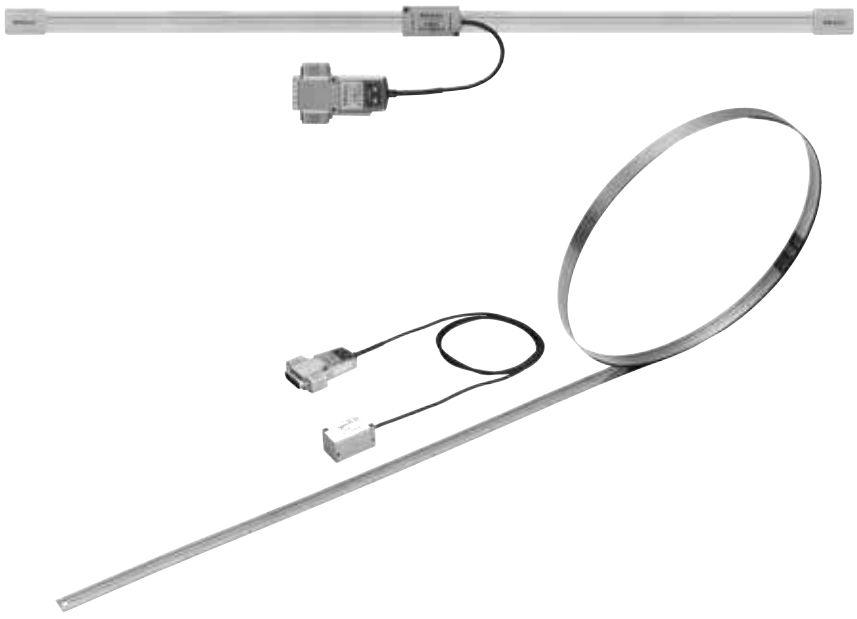

SPECIFICATIONS

Model	ABS ST1300
Range	max. 12 m
Accuracy	10 µm/m (± 5µm)
Max. Response Speed	8 m/s (Varies according to the interface)
Min. Resolution	1 nm / 10 nm
Scale Specifications	Metal tape
Applicable Interfaces	FANUC; Mitsubishi Electric; Yaskawa Electric; Panasonic; Mitutoyo ENSIS standard Interface

Mitutoyo

MICSYS

SERIES 549 High-accuracy, Non-contact 2D Encoder



SPECIFICATIONS

Order No.	**549-701A**
Model	**MICSYS-SA1**
Detection method	Laser speckle image correlation
Effective range	±100μm (2D)
Resolution	1 nm
Accuracy (20°C)	±100 nm
Data update period	20Hz

Applications

1. Evaluation of stages used in manufacturing equipment and inspection systems

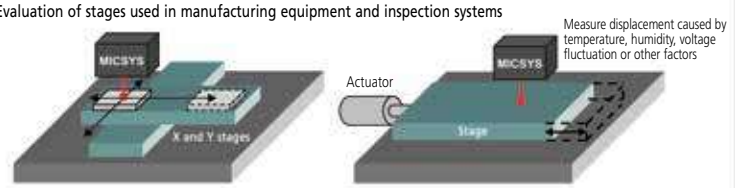

a) Evaluation of position repeatability

b) Evaluation of standstill stability and drift

2. Highly accurate positioning of workpieces

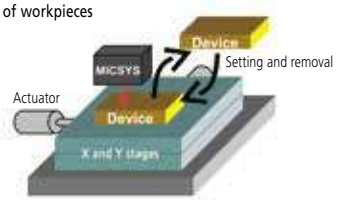

3. Measurement of minute displacement

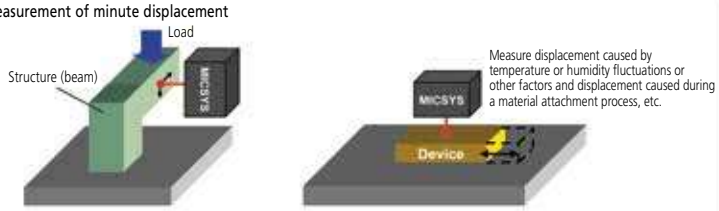

a) Measurement of minute displacement of a structure

b) Measurement of minute displacement of a workpiece

DIMENSIONS

Detector Mass : 300g

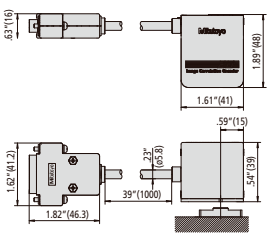

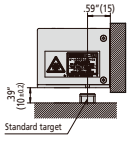

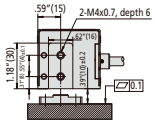

Standard target Mass : 10g

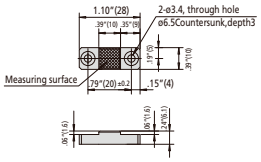

I/F unit Mass : 1700g

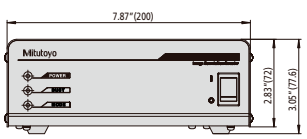

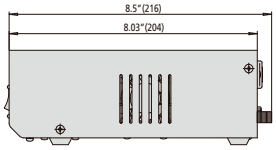

FEATURES

- Simultaneous, non-contact measurement of X-Y position.
- Nano-resolution measurement.
- Suitable for applications such as stage position repeatability, strain measurement, deflection measurement, etc.
- Applies the image correlation of a speckle pattern.
- No scales needed—can detect on any optically rough surface.
- Detector can be completely removed from surface and replaced to continue reading.
- Drawings are available on request.

Linear Scales AT103

SERIES 539 — Standard Type

IP53



FEATURES

- Enhanced vibration-resistance and durability.
- The innovative rubber lips keep out contaminants.
- An armored signal cable is used to connect the scale unit to the DRO counter for safe operation in harsh shop environments.
- The signal cable outlet can be positioned on either side of the detector head, allowing the signal cable to be connected from either direction.
- A wide variety of measuring ranges are available in this standard type scale unit.
- Connectable to the **KA** counter, **KLD** counter, or **PSU-200**.

Optional Accessories

09AAA033A: Extension cable (80" / 2m)
09AAA033B: Extension cable (200" / 5m)
09AAA033C: Extension cable (280" / 7m)



174-183A 2-Axis KA Counter
174-185A 3-Axis KA Counter



174-183A

Unit: mm (inch)

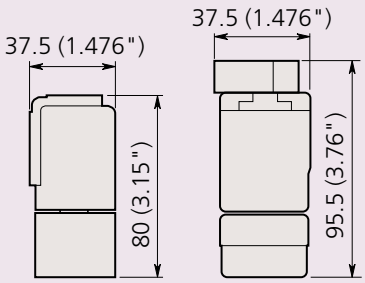

Up to 3m **Over 3m**

SPECIFICATIONS

Model	AT103
Effective range	4" to 240" / 100 to 6000mm (42 models)
Resolution	.001" to .000005" / 0.01 to 0.0001mm
Accuracy (20°C)	Effective range 100 to 3000: (5+5L₀/1000)µm Effective range 3250 to 6000: (5+8L₀/1000)µm
Output signal	Two 90° phase-shifted sinusoidal signals
Maximum response speed	120m/min (50m/min when the effective measuring length is 3250 to 6000mm)
Signal output pitch	20µm
Scale reference point	Output in 50mm pitch
Protection level	IP53
Operating temperature	0 to 45°C

*High-precision model **AT103F** (JIS Class 0, (3+3L₀/1000)µm) is also available to special order for the effective range of 100 to 2000mm.
*Ultrahigh-precision model **AT103S** (2+2L₀/1000)µm is also available to special order for the effective range of 100 to 500mm.

AT103				Effective range L₀ inch / mm	Signal cable length (m)
Order No. (standard)	Model (standard)	Order No. (high accuracy)	Model (high accuracy)		
539-111-30	**AT103-100**	**539-111-40**	**AT103-100F**	4" /100mm	3
539-112-30	**AT103-150**	**539-112-40**	**AT103-150F**	6" /150mm	
539-113-30	**AT103-200**	**539-113-40**	**AT103-200F**	8" /200mm	
539-114-30	**AT103-250**	**539-114-40**	**AT103-250F**	10" /250mm	
539-115-30	**AT103-300**	**539-115-40**	**AT103-300F**	12" /300mm	
539-116-30	**AT103-350**	**539-116-40**	**AT103-350F**	14" /350mm	
539-117-30	**AT103-400**	**539-117-40**	**AT103-400F**	16" /400mm	
539-118-30	**AT103-450**	**539-118-40**	**AT103-450F**	18" /450mm	
539-119-30	**AT103-500**	**539-119-40**	**AT103-500F**	20" /500mm	
539-121-30	**AT103-600**	**539-121-40**	**AT103-600F**	24" /600mm	
539-123-30	**AT103-700**	**539-123-40**	**AT103-700F**	28" /700mm	
539-124-30	**AT103-750**	**539-124-40**	**AT103-750F**	30" /750mm	
539-125-30	**AT103-800**	**539-125-40**	**AT103-800F**	32" /800mm	
539-126-30	**AT103-900**	**539-126-40**	**AT103-900F**	36" /900mm	
539-127-30	**AT103-1000**	**539-127-40**	**AT103-1000F**	40" /1000mm	5
539-128-30	**AT103-1100**	**539-128-40**	**AT103-1100F**	44" /1100mm	
539-129-30	**AT103-1200**	**539-129-40**	**AT103-1200F**	48" /1200mm	
539-130-30	**AT103-1300**	**539-130-40**	**AT103-1300F**	52" /1300mm	
539-131-30	**AT103-1400**	**539-131-40**	**AT103-1400F**	56" /1400mm	
539-132-30	**AT103-1500**	**539-132-40**	**AT103-1500F**	60" /1500mm	
539-133-30	**AT103-1600**	**539-133-40**	**AT103-1600F**	64" /1600mm	
539-134-30	**AT103-1700**	**539-134-40**	**AT103-1700F**	68" /1700mm	
539-135-30	**AT103-1800**	**539-135-40**	**AT103-1800F**	72" /1800mm	
539-136-30	**AT103-2000**	**539-136-40**	**AT103-2000F**	80" /2000mm	
539-137-30	**AT103-2200**	—	**AT103-2200F**	88" /2200mm	
539-138-30	**AT103-2400**	—	**AT103-2400F**	96" /2400mm	7
539-139-30	**AT103-2500**	—	**AT103-2500F**	100" /2500mm	
539-140-30	**AT103-2600**	—	**AT103-2600F**	104" /2600mm	
539-141-30	**AT103-2800**	—	**AT103-2800F**	112" /2800mm	
539-142-30	**AT103-3000**	—	**AT103-3000F**	120" /3000mm	
539-143-30	**AT103-3250**	—	**AT103-3250F**	130" /3250mm	10
539-144-30	**AT103-3500**	—	**AT103-3500F**	140" /3500mm	
539-145-30	**AT103-3750**	—	**AT103-3750F**	150" /3750mm	
539-146-30	**AT103-4000**	—	**AT103-4000F**	160" /4000mm	
539-147-30	**AT103-4250**	—	**AT103-4250F**	170" /4250mm	
539-148-30	**AT103-4500**	—	**AT103-4500F**	180" /4500mm	
539-149-30	**AT103-4750**	—	**AT103-4750F**	190" /4750mm	15
539-150-30	**AT103-5000**	—	**AT103-5000F**	200" /5000mm	
539-151-30	**AT103-5250**	—	**AT103-5250F**	210" /5250mm	
539-152-30	**AT103-5500**	—	**AT103-5500F**	220" /5500mm	
539-153-30	**AT103-5750**	—	**AT103-5750F**	230" /5750mm	
539-154-30	**AT103-6000**	—	**AT103-6000F**	240" /6000mm	

Linear Scales AT113

SERIES 539 — Slim Spar Type

- Slim spar type with unit sectional dimensions of 22×35mm.
- Connectable to the **KA** counter, **KLD** counter or **PSU-200**.
- Dimensionally compatible with **AT116** linear scale units.



SPECIFICATIONS

Model	AT113
Effective range	4" to 60" / 100 to 1500mm (20 models)
Resolution	.001" to .000005" / 0.01 to 0.0001mm
Accuracy (20°C)	Standard: (5+5L₀/1000)μm, High accuracy: (3+3Lo/1000)
Output signal	Two 90° phase-shifted sinusoidal signals
Maximum response speed	120m/min
Signal output pitch	20μm
Scale reference point	Output in 50mm pitch
Protection level	IP53
Operating temperature	0 to 45°C

* High-precision model **AT113F** (JIS Class 0, 3+3L₀/1000)μm is also available to special order.
* Ultrahigh-precision model **AT113S** (2+2L₀/1000)μm is also available to special order for the effective range 100 to 500mm.

AT113				Effective range	Signal cable length(m)
Order No. (standard)	Model	Order No. (High accuracy)	Model	L₀ inch / mm	
539-201-30	**AT113-100**	**539-201-40**	**AT113-100F**	4" /100mm	3
539-202-30	**AT113-150**	**539-202-40**	**AT113-150F**	6" /150mm	
539-203-30	**AT113-200**	**539-203-40**	**AT113-200F**	8" /200mm	
539-204-30	**AT113-250**	**539-204-40**	**AT113-250F**	10" /250mm	
539-205-30	**AT113-300**	**539-205-40**	**AT113-300F**	12" /300mm	
539-206-30	**AT113-350**	**539-206-40**	**AT113-350F**	14" /350mm	
539-207-30	**AT113-400**	**539-207-40**	**AT113-400F**	16" /400mm	
539-208-30	**AT113-450**	**539-208-40**	**AT113-450F**	18" /450mm	
539-209-30	**AT113-500**	**539-209-40**	**AT113-500F**	20" /500mm	
539-211-30	**AT113-600**	**539-211-40**	**AT113-600F**	24" /600mm	
539-213-30	**AT113-700**	**539-213-40**	**AT113-700F**	28" /700mm	
539-214-30	**AT113-750**	**539-214-40**	**AT113-750F**	30" /750mm	
539-215-30	**AT113-800**	**539-215-40**	**AT113-800F**	32" /800mm	
539-216-30	**AT113-900**	**539-216-40**	**AT113-900F**	36" /900mm	
539-217-30	**AT113-1000**	**539-217-40**	**AT113-1000F**	40" /1000mm	5
539-218-30	**AT113-1100**	**539-218-40**	**AT113-1100F**	44" /1100mm	
539-219-30	**AT113-1200**	**539-219-40**	**AT113-1200F**	48" /1200mm	
539-220-30	**AT113-1300**	**539-220-40**	**AT113-1300F**	52" /1300mm	
539-221-30	**AT113-1400**	**539-221-40**	**AT113-1400F**	56" /1400mm	
539-222-30	**AT113-1500**	**539-222-40**	**AT113-1500F**	60" /1500mm	

PROPRIETARY INSPECTION CERTIFICATE

Optional Accessories

09AAA033A: Extension cable (80" / 2m)
09AAA033B: Extension cable (200" / 5m)
09AAA033C: Extension cable (280" / 7m)



174-183A 2-Axis KA Counter
174-185A 3-Axis KA Counter



174-183A

Unit: mm (inch)

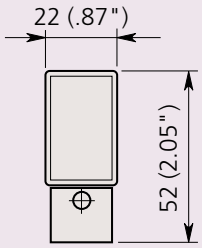

Linear Scales AT112-F

SERIES 539 — Super Slim Spar Type

- Super slim spar type with unit sectional dimensions of 15.4×30mm.
- Connectable to the **KA** counter, **KLD** counter or **PSU-200**.



Optional Accessories

09AAA033A: Extension cable (80" / 2m)
09AAA033B: Extension cable (200" / 5m)
09AAA033C: Extension cable (280" / 7m)



174-183A 2-Axis KA Counter
174-185A 3-Axis KA Counter



174-183A

Unit: mm (inch)

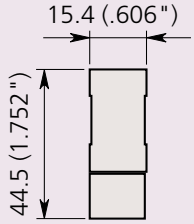

SPECIFICATIONS

Model	**AT112-F** (High Accuracy)
Effective range	1.5" to 40" / 50 to 1020mm (19 models)
Resolution	.001 to .000005" / 0.01mm to 0.0001mm
Accuracy (20°C)	(3+3L₀/1000)µm
Output signal	Two 90° phase-shifted sinusoidal signals
Maximum response speed	50m/min
Signal output pitch	20µm
Scale reference point	Output in 50mm pitch*1
Protection level	IP53
Operating temperature	0 to 45°C

* Ultra-high precision model **AT112S** (2+2L₀/1000)µm is also available to special order for the effective range 50 to 320mm.
*1: Models whose effective range is 50mm or 70mm: Center point
Models whose effective range is 120mm or more: 50mm pitch starting at a point 35mm from the "▼" mark on the left seen from the front.

AT112-F		Effective range L₀ inch / mm	Signal cable length (m)
Order No.	Model		
539-251-10	**AT112-50F**	1.5" /50mm	3
539-252-10	**AT112-70F**	2.5" /70mm	
539-253-10	**AT112-120F**	4.5" /120mm	
539-254-10	**AT112-170F**	6.5" /170mm	
539-255-10	**AT112-220F**	8.5" /220mm	
539-256-10	**AT112-270F**	10.5" /270mm	
539-257-10	**AT112-320F**	12.5" /320mm	
539-258-10	**AT112-370F**	14.5" /370mm	
539-259-10	**AT112-420F**	16.5" /420mm	
539-260-10	**AT112-470F**	18.5" /470mm	
539-261-10	**AT112-520F**	20" /520mm	
539-262-10	**AT112-570F**	22" /570mm	
539-263-10	**AT112-620F**	24" /620mm	
539-264-10	**AT112-670F**	26" /670mm	
539-265-10	**AT112-720F**	28" /720mm	
539-266-10	**AT112-770F**	30" /770mm	
539-267-10	**AT112-820F**	32" /820mm	
539-268-10	**AT112-920F**	36" /920mm	
539-269-10	**AT112-1020F**	40" /1020mm	

Linear Scales AT116

SERIES 539 — Economy and Slim Spar Type

PROPRIETARY INSPECTION CERTIFICATE

FEATURES

- Suitable for milling machines, XY tables, jigs, etc.
- Dimensionally compatible with **AT113** linear scale units.
- Connectable to the **KA** counter, **KLD** counter or **PSU-200**.



SPECIFICATIONS

Model	AT116
Effective range	4" to 60" / 100 to 1500mm (20 models)
Resolution	0.01 to 0.0001mm (.001" to .000005")
Accuracy (20°C)	(5+5L₀/1000)µm
Output signal	Two 90° phase-shifted sinusoidal signals
Maximum response speed	50m/min
Signal output pitch	20µm
Scale reference point	Output in 50mm pitch
Protection level	IP53
Operating temperature	0 to 45°C

AT116		Effective range L₀ inch / mm	Signal cable length (m)
Order No.	Model		
539-271-30	**AT116-100**	4" /100mm	3.5
539-272-30	**AT116-150**	6" /150mm	
539-273-30	**AT116-200**	8" /200mm	
539-274-30	**AT116-250**	10" /250mm	
539-275-30	**AT116-300**	12" /300mm	
539-276-30	**AT116-350**	14" /350mm	
539-277-30	**AT116-400**	16" /400mm	
539-278-30	**AT116-450**	18" /450mm	
539-279-30	**AT116-500**	20" /500mm	
539-281-30	**AT116-600**	24" /600mm	
539-283-30	**AT116-700**	28" /700mm	
539-284-30	**AT116-750**	30" /750mm	
539-285-30	**AT116-800**	32" /800mm	
539-286-30	**AT116-900**	36" /900mm	
539-287-30	**AT116-1000**	40" /1000mm	5
539-288-30	**AT116-1100**	44" /1100mm	
539-289-30	**AT116-1200**	48" /1200mm	
539-290-30	**AT116-1300**	52" /1300mm	
539-291-30	**AT116-1400**	56" /1400mm	
539-292-30	**AT116-1500**	60" /1500mm	

Optional Accessories

09AAB674A: Extension cable (2m / 80")
09AAB674B: Extension cable (5m / 200")
09AAB674C: Extension cable (7m / 280")



174-183A 2-Axis KA Counter
174-185A 3-Axis KA Counter



174-183A

Unit: mm (inch)

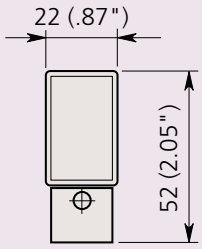

Linear Scales AT402E

SERIES 539 — General-purpose Type

- Ideal for machine tools for heavy cutting, as well as linear motors.
- Multi-point elastic fixing for excellent vibration resistance (200m/s^2), shock resistance (400m/s^2) and temperature characteristics.
- The Absolute Interval Code allows for a simplified, low-cost ABS system.
- High accuracy of ±2µm (up to 540mm)



SPECIFICATIONS

Model	AT402E
Effective range	5.6" to 121.6" / 140 to 3040mm (24 models)
Accuracy (20°C)	Effective range: 140 to 540mm: ±2µm Effective range: 640 to 940mm: ±3µm Effective range: 1040 to 3040mm: ±3µm/m
Output signal	Signal: 1Vp-p differential sinusoidal signal Differential reference point pulse: **Absolute Interval Code** compatible
Maximum response speed	120m/min (With sinusoidal signal amplitude of –3dB)
Signal output pitch	20µm
Protection level	IP53
Operating temperature	0 to 45°C
Cable configuration	Type A: 3m flying lead cable Type B: 3m cable with European CNC connectors Type C: 3m cable with FANUC connectors

Cable A: Lead wires type



Cable length: 3m

Cable B: Connectable to Euro controller

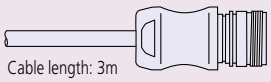

Cable length: 3m

Cable C: Connectable to FANUC serial board C

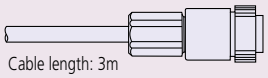

Cable length: 3m

AT402E		Effective range
Order No.	**Model**	L_0 inch / mm
539-371- □□	**AT402E-140**	5.6" /140mm
539-373- □□	**AT402E-240**	9.6" /240mm
539-374- □□	**AT402E-340**	13.6" /340mm
539-375- □□	**AT402E-440**	17.6" /440mm
539-376- □□	**AT402E-540**	21.6" /540mm
539-377- □□	**AT402E-640**	25.6" /640mm
539-378- □□	**AT402E-740**	29.6" /740mm
539-379- □□	**AT402E-840**	33.6" /840mm
539-380- □□	**AT402E-940**	37.6" /940mm
539-381- □□	**AT402E-1040**	41.6" /1040mm
539-382- □□	**AT402E-1140**	45.6" /1140mm
539-383- □□	**AT402E-1240**	49.6" /1240mm

AT402E		Effective range
Order No.	**Model**	L_0 inch / mm
539-384- □□	**AT402E-1340**	53.6" /1340mm
539-385- □□	**AT402E-1440**	57.6" /1440mm
539-386- □□	**AT402E-1540**	61.6" /1540mm
539-387- □□	**AT402E-1640**	65.6" /1640mm
539-388- □□	**AT402E-1740**	69.6" /1740mm
539-389- □□	**AT402E-1840**	73.6" /1840mm
539-390- □□	**AT402E-2040**	81.6" /2040mm
539-391- □□	**AT402E-2240**	89.6" /2240mm
539-392- □□	**AT402E-2440**	97.6" /2440mm
539-393- □□	**AT402E-2640**	105.6" /2640mm
539-394- □□	**AT402E-2840**	113.6" /2840mm
539-395- □□	**AT402E-3040**	121.6" /3040mm

Signal cable length: 3m

* The indication of " □□ " in the code numbers will be **01** for Type A, **02** for Type B, **03** for Type C, and **00** for no cable

DIMENSIONS

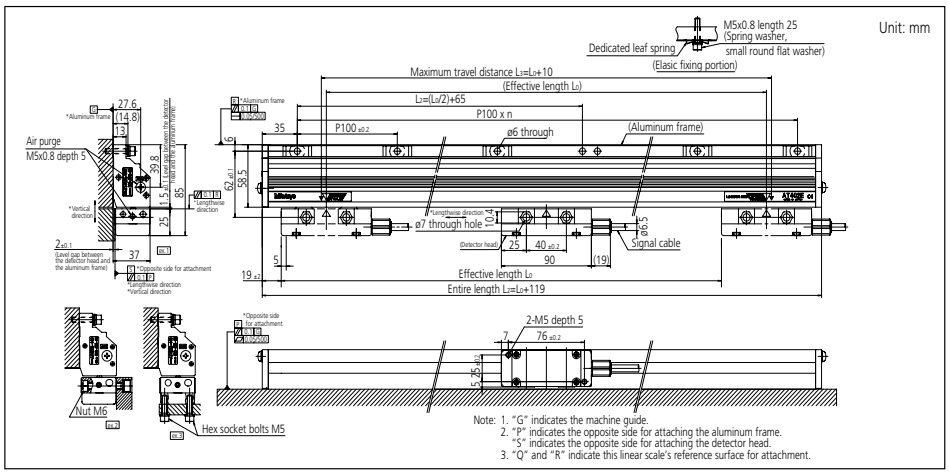

Linear Scales AT203

SERIES 539 — Standard Type



PROPRIETARY INSPECTION CERTIFICATE

- The travel length of the linear scale is output with 2-phase square wave signals, which can be used as a feedback signal for NC machine tools.
- The pulse signal unit (PSU) is no longer needed, and the **AT203** can be directly connected to an NC machine tool.

SPECIFICATIONS

Model	AT203
Effective range	4" to 240" / 100 to 6000mm (42 models)
Accuracy (20°C)	Effective range: 100 to 1500mm (3+3L₀/1000)µm Effective range: 1600 to 3000mm (5+5L₀/1000)µm Effective range: 3250 to 6000mm (5+8L₀/1000)µm
Output signal	Two 90° phase-shifted square wave signals
Maximum response speed	120m/min (50m/min when the effective range is 3250 to 6000mm)
Resolution	0.1/0.5/1µm (Switchable by the DIP switches)
Scale reference point	Output in 50mm pitch
Protection level	IP53
Operating temperature	0°C to 45°C

AT203		Effective range	Signal cable length
Order No.	Model	L₀ inch / mm	(m)
539-411-30	**AT203-100**	4" /100mm	5
539-412-30	**AT203-150**	6" /150mm	
539-413-30	**AT203-200**	8" /200mm	
539-414-30	**AT203-250**	10" /250mm	
539-415-30	**AT203-300**	12" /300mm	
539-416-30	**AT203-350**	14" /350mm	
539-417-30	**AT203-400**	16" /400mm	
539-418-30	**AT203-450**	18" /450mm	
539-419-30	**AT203-500**	20" /500mm	
539-421-30	**AT203-600**	24" /600mm	
539-423-30	**AT203-700**	28" /700mm	
539-424-30	**AT203-750**	30" /750mm	
539-425-30	**AT203-800**	32" /800mm	
539-426-30	**AT203-900**	36" /900mm	
539-427-30	**AT203-1000**	40" /1000mm	
539-428-30	**AT203-1100**	44" /1100mm	
539-429-30	**AT203-1200**	48" /1200mm	
539-430-30	**AT203-1300**	52" /1300mm	
539-431-30	**AT203-1400**	56" /1400mm	
539-432-30	**AT203-1500**	60" /1500mm	
539-433-30	**AT203-1600**	64" /1600mm	
539-434-30	**AT203-1700**	68" /1700mm	
539-435-30	**AT203-1800**	72" /1800mm	
539-436-30	**AT203-2000**	80" /2000mm	
539-437-30	**AT203-2200**	88" /2200mm	
539-438-30	**AT203-2400**	96" /2400mm	
539-439-30	**AT203-2500**	100" /2500mm	
539-440-30	**AT203-2600**	104" /2600mm	
539-441-30	**AT203-2800**	112" /2800mm	
539-442-30	**AT203-3000**	120" /3000mm	
539-443-30	**AT203-3250**	130" /3250mm	
539-444-30	**AT203-3500**	140" /3500mm	
539-445-30	**AT203-3750**	150" /3750mm	
539-446-30	**AT203-4000**	160" /4000mm	
539-447-30	**AT203-4250**	170" /4250mm	
539-448-30	**AT203-4500**	180" /4500mm	
539-449-30	**AT203-4750**	190" /4750mm	
539-450-30	**AT203-5000**	200" /5000mm	
539-451-30	**AT203-5250**	210" /5250mm	
539-452-30	**AT203-5500**	220" /5500mm	
539-453-30	**AT203-5750**	230" /5750mm	
539-454-30	**AT203-6000**	240" /6000mm	

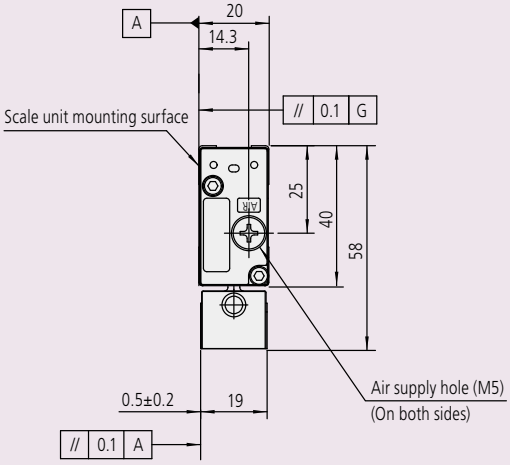

- Any scale size drawings are available on request.

Linear Scales AT216-T / AT217-TL

SERIES 529 — Slim, Sealed Type



- Slim, sealed type incremental linear scales suitable for feedback systems in NC machine tools.
- Direct connection with NC machine tools is possible.
- Square wave RS-422A, 1µm/0.5µm & 5µm resolution.
- Armored cable included (unless otherwise specified)

Unit: mm (inch)

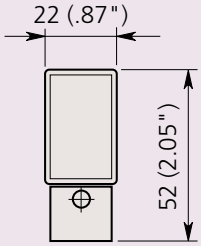

- Any scale size drawings are available on request.

5µm resolution

AT216-T		Effective range Lo inch / mm	Signal cable length (m)
Order No.	Model		
529-431-3	**AT216-100T**	4" /100mm	5
529-432-3	**AT216-150T**	6" /150mm	
529-433-3	**AT216-200T**	8" /200mm	
529-434-3	**AT216-250T**	10" /250mm	
529-435-3	**AT216-300T**	12" /300mm	
529-436-3	**AT216-350T**	14" /350mm	
529-437-3	**AT216-400T**	16" /400mm	
529-438-3	**AT216-450T**	18" /450mm	
529-439-3	**AT216-500T**	20" /500mm	
529-441-3	**AT216-600T**	24" /600mm	
529-443-3	**AT216-700T**	28" /700mm	
529-444-3	**AT216-750T**	30" /750mm	
529-445-3	**AT216-800T**	32" /800mm	
529-446-3	**AT216-900T**	36" /900mm	
529-447-3	**AT216-1000T**	40" /1000mm	
529-448-3	**AT216-1100T**	44" /1100mm	
529-449-3	**AT216-1200T**	48" /1200mm	
529-450-3	**AT216-1300T**	52" /1300mm	
529-451-3	**AT216-1400T**	56" /1400mm	
529-452-3	**AT216-1500T**	60" /1500mm	

1µm/0.5µm resolution

AT217-TL		Effective range Lo inch / mm	Signal cable length (m)
Order No.	Model		
529-461-5 (-7)	**AT216-100TL**	4" /100mm	5
529-462-5 (-7)	**AT216-150TL**	6" /150mm	
529-463-5 (-7)	**AT216-200TL**	8" /200mm	
529-464-5 (-7)	**AT216-250TL**	10" /250mm	
529-465-5 (-7)	**AT216-300TL**	12" /300mm	
529-466-5 (-7)	**AT216-350TL**	14" /350mm	
529-467-5 (-7)	**AT216-400TL**	16" /400mm	
529-468-5 (-7)	**AT216-450TL**	18" /450mm	
529-469-5 (-7)	**AT216-500TL**	20" /500mm	
529-471-5 (-7)	**AT216-600TL**	24" /600mm	
529-473-5 (-7)	**AT216-700TL**	28" /700mm	
529-474-5 (-7)	**AT216-750TL**	30" /750mm	
529-475-5 (-7)	**AT216-800TL**	32" /800mm	
529-476-5 (-7)	**AT216-900TL**	36" /900mm	
529-477-5 (-7)	**AT216-1000TL**	40" /1000mm	
529-478-5 (-7)	**AT216-1100TL**	44" /1100mm	
529-479-5 (-7)	**AT216-1200TL**	48" /1200mm	
529-480-5 (-7)	**AT216-1300TL**	52" /1300mm	
529-481-5 (-7)	**AT216-1400TL**	56" /1400mm	
529-482-5 (-7)	**AT216-1500TL**	60" /1500mm	

(-7) : option for unarmored cable

Linear Scales AT211

AT211-A (Multipoint mounting), AT211-B (Double-end mounting)

SERIES 539 — Slim Spar and High-speed Type

FEATURES

- High-resolution, high-accuracy sealed type linear scales. Ideal for feedback control in positioning a semiconductor manufacturing system, CNC machine tool, etc.
- Two types of models are available: the AT211-A, the multiple-point installation type designed for improved resistance against vibration and shock; and the AT211-B, which attaches to a machine at both ends. The AT211-B is compatible with the AT111 slim type in size.



- This is a slim, sealed, 2-phase, square-wave scale that can be directly connected to a control unit.
- Scale alarm display LED allows for easy maintenance.
- A wide range of specifications to best suit your application.
- Suitable for the control of semiconductor manufacturing systems and NC machine tools.

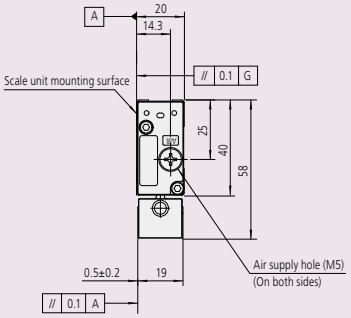

- Any scale size drawings are available on request.

Common specification

Model	AT211
Effective range*	4 to 60" / 100 to 1500mm (20 models)
Accuracy (20°C)*	(3+3L₀/1000)μm L₀: effective range (mm)
	(2+2L₀/1000)μm (L₀≤500mm)
Output signal	Two 90° phase-shifted square wave signals
Maximum response speed*	5.4 to 120m/min (varies depending on the resolution or minimum edge interval)
Resolution*	0.1/ 0.2/ 0.5/ 1.0/ 2.5/ 5.0μm
Scale reference point*	50mm/Center point/Left-edge point/Right-edge point
Protection level	IP53
Operating temperature	0 to 45°C

* Desired specification is selectable.

Meaning of Model No.

AT211 - 0100 A 1 S - P 1 - A B

- Effective range: 100 to 1500mm
- Mounting method: Multipoint mounting/Double-end mounting
- Scale reference point: 50mm/ Center point/ Left edge point/ Right edge point
- Indication accuracy: (3+3L₀/1000)μm / (2+2L₀/1000)μm
- Resolution/ Minimum edge-to-edge interval: 0.1 to 5μm / 125 to 1000ns, 22 types
- Direction: PA/PB phase
- Head cable: 0.3 to 9m, 9 types
- Signal cable: 3 to 7m / None, 10 types

Linear Scales ST24

SERIES 579 — Standard Type

- Outputs 2-phase square and sinusoidal wave signals at 10µm pitch.
- Has a thinner detector head (thickness 11mm).
- The maximum effective measurement range of 3000mm enables use on large machines.
- Two types available for each signal output specification.
- LED function for indicating signal errors.

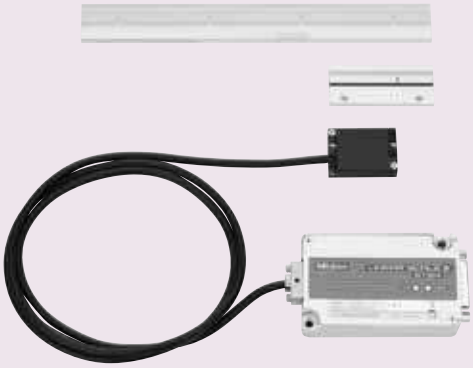

*1:

Effective range	Accuracy
300mm or less	±1µm
500mm or less	±2µm
1000mm or less	±3µm
3000mm or less	±3µm/m

*2: Maximum response speed when the sinusoidal signals are output

SPECIFICATIONS

Model	ST24
Detection method	Reflective photoelectric linear encoder
Output signal	**ST24B**: 2-phase square wave signals, alarm reset input **ST24C**: 2-phase square wave signals, 2-phase sinusoidal signals
Main scale grating pitch	20µm
Signal output pitch	10µm
Effective range	10 to 3000mm
Resolution	0.01, 0.02, 0.05, 0.1µm
Accuracy (20°C)*1	±1µm, ±2µm, ±3µm(/m)
Maximum response speed*2	1200mm/s
Scale reference point	Center point (10 to 80mm) 50mm pitch (100 to 3000mm)
Power supply voltage	DC5V ±5%
Operating temperature/ humidity range	0 to 40°C/ 20 to 80% (no condensation)
Storage temperature/ humidity range	–20 to 60°C/ 20 to 80% (no condensation)
Head cable length	1m (high-flex connecting cable)

- Any scale size drawings are available on request.

ST24 Mounting dimensions

Unit: mm

- 10 to 80mm (Adhesive fixing type) *

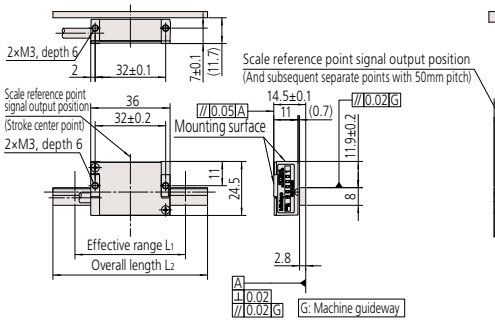

- 100 to 3000mm

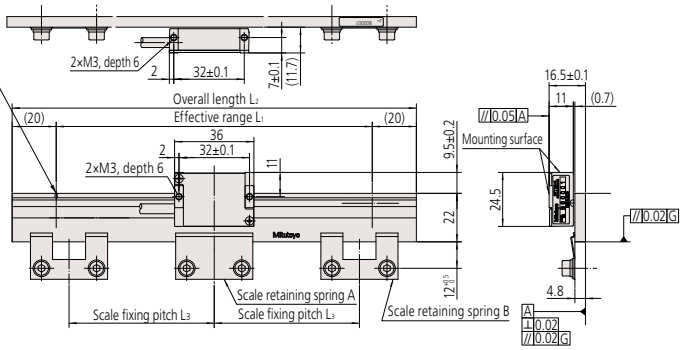

Dimensions of scale units

Order No.*	Code*	Effective range L1 (mm)	Overall length L2 (mm)	Scale fixing pitch L3 (mm)	Retaining spring A	Retaining spring B
579-551-0☐	ST24◇- 10	10	30	–	–	–
579-552-0☐	ST24◇- 25	25	45	–	–	–
579-553-0☐	ST24◇- 50	50	70	–	–	–
579-554-0☐	ST24◇- 75	75	90	–	–	–
579-555-0☐	ST24◇- 80	80	100	–	–	–
579-556-0☐	ST24◇-100	100	140	50	1 pc.	2 pcs.
579-557-0☐	ST24◇-150	150	190	75	1 pc.	2 pcs.
579-558-0☐	ST24◇-200	200	240	100	1 pc.	2 pcs.
579-559-0☐	ST24◇-250	250	290	60	1 pc.	4 pcs.
579-560-0☐	ST24◇-300	300	340	75	1 pc.	4 pcs.
579-561-0☐	ST24◇-350	350	390	85	1 pc.	4 pcs.
579-562-0☐	ST24◇-400	400	440	100	1 pc.	4 pcs.
579-563-0☐	ST24◇-450	450	490	75	1 pc.	6 pcs.
579-564-0☐	ST24◇-500	500	540	80	1 pc.	6 pcs.
579-565-0☐	ST24◇-600	600	640	100	1 pc.	6 pcs.
579-566-0☐	ST24◇-700	700	740	85	1 pc.	8 pcs.
579-567-0☐	ST24◇-800	800	840	100	1 pc.	8 pcs.

Order No.*	Code*	Effective range L1 (mm)	Overall length L2 (mm)	Scale fixing pitch L3 (mm)	Retaining spring A	Retaining spring B
579-568-0☐	ST24◇- 900	900	940	90	1 pc.	10 pcs.
579-569-0☐	ST24◇-1000	1000	1040	100	1 pc.	10 pcs.
579-570-0☐	ST24◇-1100	1100	1140	90	1 pc.	12 pcs.
579-571-0☐	ST24◇-1200	1200	1240	100	1 pc.	12 pcs.
579-572-0☐	ST24◇-1300	1300	1340	130	1 pc.	10 pcs.
579-573-0☐	ST24◇-1400	1400	1440	100	1 pc.	14 pcs.
579-574-0☐	ST24◇-1500	1500	1540	125	1 pc.	12 pcs.
579-575-0☐	ST24◇-1600	1600	1640	100	1 pc.	16 pcs.
579-576-0☐	ST24◇-1700	1700	1740	120	1 pc.	14 pcs.
579-577-0☐	ST24◇-1800	1800	1840	100	1 pc.	18 pcs.
579-578-0☐	ST24◇-2000	2000	2040	100	1 pc.	20 pcs.
579-579-0☐	ST24◇-2200	2200	2240	100	1 pc.	22 pcs.
579-580-0☐	ST24◇-2400	2400	2440	100	1 pc.	24 pcs.
579-581-0☐	ST24◇-2500	2500	2540	95	1 pc.	26 pcs.
579-582-0☐	ST24◇-2600	2600	2640	100	1 pc.	26 pcs.
579-583-0☐	ST24◇-2800	2800	2840	100	1 pc.	28 pcs.
579-584-0☐	ST24◇-3000	3000	3040	100	1 pc.	30 pcs.

*The ☐ and ◇ symbols in the tables above have the following meanings:
◇→B (2-phase square wave signals + external reset input) : ☐→2
◇→C (2-phase sinusoidal signals + 2-phase square wave signals) : ☐→3

Linear Scales ST422

SERIES 579 — Compact Type



SPECIFICATIONS

Model	ST422
Detection method	Reflective photoelectric linear encoder
Output signal	2-phase sinusoidal signals, 2-phase square wave signals
Main scale grating pitch	40µm
Signal output pitch	40µm
Effective range	10 to 3000mm
Accuracy (20°C)*1	±1µm, ±2µm, ±3µm(/m)
Resolution	0.2µm/ 0.5µm/ 1µm/ 5µm (Selectable with internal switch)
Scale reference point	Center point (10 to 75mm)/ 50mm pitch (100mm or more)
Maximum response speed	5000mm/s (varies depending on the setting)
Minimum edge-to-edge interval	125ns/ 250ns/ 500ns/ 1µs (selectable with internal switch)
Operating temperature/ humidity range	0 to 40°C, RH 20 to 80% (no condensation)
Storage temperature/ humidity range	–20 to 60°C, RH 20 to 80% (no condensation)
Head cable length	1m

*1:

Effective range	Accuracy
300mm or less	±1µm
500mm or less	±2µm
1000mm or less	±3µm
3000mm or less	±3µm/m

Dimensions of scale units

Order No.	Code	Effective range L1 (mm)	Overall length L2 (mm)	Scale fixing pitch L3 (mm)	Retaining spring A	Retaining spring B
579-631	**ST422-10**	10	30	—	—	—
579-632	**ST422-25**	25	45	—	—	—
579-633	**ST422-50**	50	70	—	—	—
579-634	**ST422-75**	75	95	—	—	—
579-635	**ST422-100**	100	120	—	—	—
579-636	**ST422-150**	150	170	—	—	—
579-637	**ST422-200**	200	220	—	—	—
579-638	**ST422-250**	250	270	—	—	—
579-639	**ST422-300**	300	320	—	—	—
579-640	**ST422-350**	350	370	—	—	—
579-641	**ST422-400**	400	440	100	1 pc.	4 pcs.
579-642	**ST422-450**	450	490	75	1 pc.	6 pcs.
579-643	**ST422-500**	500	540	80	1 pc.	6 pcs.
579-644	**ST422-600**	600	640	100	1 pc.	6 pcs.
579-645	**ST422-700**	700	740	85	1 pc.	8 pcs.
579-646	**ST422-800**	800	840	100	1 pc.	8 pcs.
579-647	**ST422-900**	900	940	90	1 pc.	10 pcs.

Order No.	Code	Effective range L1 (mm)	Overall length L2 (mm)	Scale fixing pitch L3 (mm)	Retaining spring A	Retaining spring B
579-648	**ST422-1000**	1000	1040	100	1 pc.	10 pcs.
579-649	**ST422-1100**	1100	1140	90	1 pc.	12 pcs.
579-650	**ST422-1200**	1200	1240	100	1 pc.	12 pcs.
579-651	**ST422-1300**	1300	1340	130	1 pc.	10 pcs.
579-652	**ST422-1400**	1400	1440	100	1 pc.	14 pcs.
579-653	**ST422-1500**	1500	1540	125	1 pc.	12 pcs.
579-654	**ST422-1600**	1600	1640	100	1 pc.	16 pcs.
579-655	**ST422-1700**	1700	1740	120	1 pc.	14 pcs.
579-656	**ST422-1800**	1800	1840	100	1 pc.	18 pcs.
579-657	**ST422-2000**	2000	2040	100	1 pc.	20 pcs.
579-658	**ST422-2200**	2200	2240	100	1 pc.	22 pcs.
579-659	**ST422-2400**	2400	2440	100	1 pc.	24 pcs.
579-660	**ST422-2500**	2500	2540	95	1 pc.	26 pcs.
579-661	**ST422-2600**	2600	2640	100	1 pc.	26 pcs.
579-662	**ST422-2800**	2800	2840	100	1 pc.	28 pcs.
579-663	**ST422-3000**	3000	3040	100	1 pc.	30 pcs.

- The maximum response speed is 5000mm/s. (When resolution is 1µm and the minimum edge interval is 125ns.)
- Ultra-compact detector control unit allows use in applications where space-saving design is important.
- The maximum effective measurement length of 3000mm enables use on large machines.
- Simultaneous output of 2-phase square wave signals (maximum resolution: 0.2µm) and 2-phase sinusoidal wave signals (main signal: 40µm) is available.
- LED function for indicating signal errors.
- Equipped with scale reference point output.

ST422 Scale unit mounting dimensions

Unit: mm

- ST422-10 to 350 (Adhesive fixing type) *3

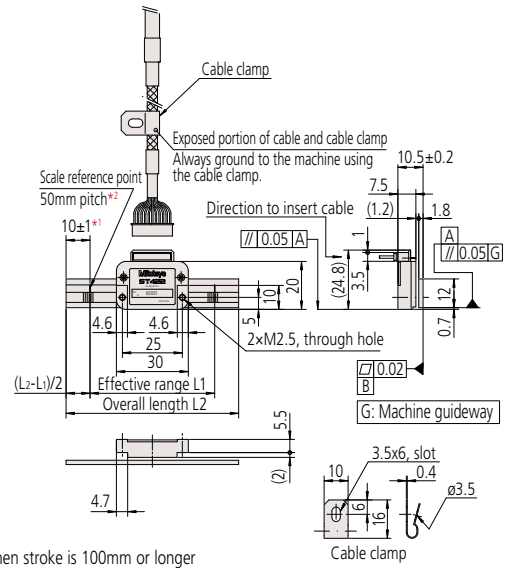

- ST422-400 to 3000

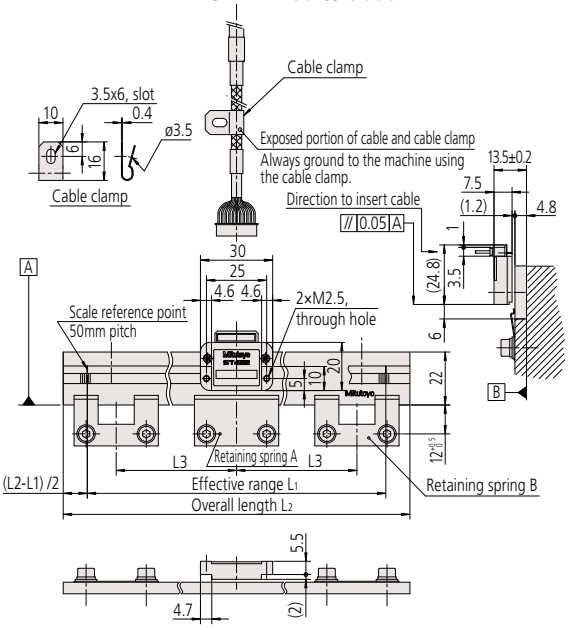

*1 When stroke is 100mm or longer
*2 One center point when stroke is 10 to 75mm
*3 For information on fixing methods for adhesive fixing type

- Any scale size drawings are available on request.

Linear Scales ST46-EZA

SERIES 579 — Compact Type

- Includes an automatic adjusting function for the signal (EZA function) at the push of a button.
- Detector head mounting and signal adjustment possible without oscilloscope or PC.
- A setup indicator for checking signal strength is included.
- I/F circuit integrated in connector shell reduces volume to 60% compared to conventional interface.
- Self-diagnosis function with USB connectivity facilitates signal strength checking and parameter setup.
- Glass and metal tape scales are available.
- The thickness of the detector head is only 7.5 mm. The metal tape scale type has a mounting surface area of 12.5 by 9.325 mm, allowing use in applications where a space-saving design is important.
- Drawings are available on request

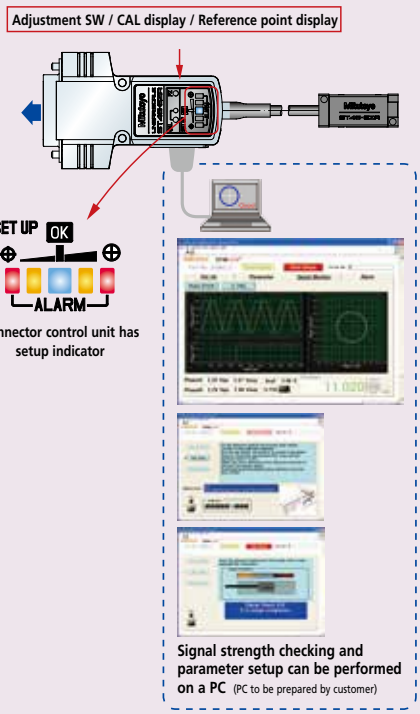

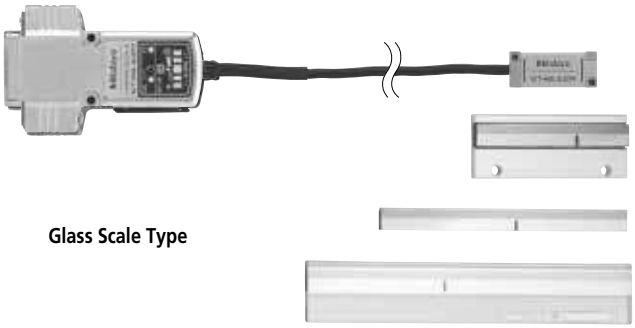

Glass Scale Type

Metal Tape Scale Type

•Double-end fixing tentioned design

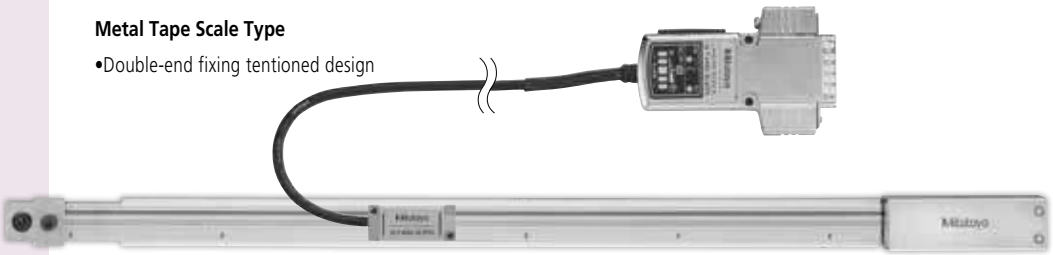

•Double-sided adhesive tape fixing design

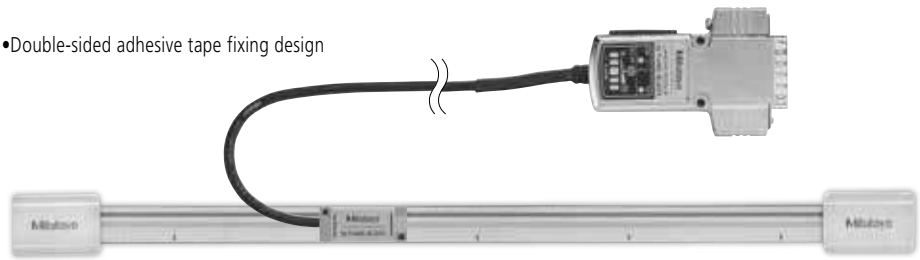

NC side

SPECIFICATIONS

Model	ST46-EZA	
Detection method	Reflective photoelectlic linear encoder	
Scale type	Glass	Metal tape
Main scale grating pitch	20μm	
Output signal	Type B: 2-phase square wave signals, reference point pulse, external reset input. Type C: 2-phase square wave signals, reference point pulse, 2-phase sinusoidal signals.	
Effective range	10 to 3000mm	
Resolution	0.05μm to 5 μm	
Accuracy (20°C)	Effective range 10 to 300mm: ±1μm Effective range 350 to 500mm: ±2μm Effective range 600 to 1000mm: ±3μm Effective range 1100 to 3000mm: ±3μm/m	Effective range 10 to 1000mm: ±5μm Effective range 1100 to 3000mm: ±5μm/m (The above accuracy applies to individual scales. For double-end fixing designs, perform point-to-point correction after ensuring the metal tape is tensioned correctly.)
Maximum response speed	2.6m/s (With sinusoidal signal amplitude of -3dB)	
Scale reference point	50mm pitch, 10 to 80mm: Center point	
Power supply voltage	5VDC±5%	
Operating temperature/humidity range	0 to 40°C, RH 20 to 80% (no condensation)	
Storage temperature/humidity range	–20 to 60°C, RH 20 to 80% (no condensation)	

Linear Scales ST36

SERIES 579 — High-accuracy Type



- Outputs two-phase sinusoidal wave signal, two-phase pulse signal, and 1Vp-p at 4µm pitch.
- High-accuracy type, 0.5µm class (effective range up to 300mm)
- Has a thinner detector head (thickness 11.5mm).
- The maximum effective measurement range of 3000mm allows use on large machines.
- Four types available for each signal output specification.
- LED function for indicating signal errors.
- Along with the output specifications of 2-phase sinusoidal wave and 2-phase square wave, the output specification of 1Vp-p wave is available.

SPECIFICATIONS

Model	ST36
Detection method	Reflective photoelectric linear encoder
Output signal	**ST36A**: 2-phase sinusoidal signals **ST36B**: 2-phase square wave signals, alarm reset input **ST36C**: 2-phase square wave signals, 2-phase sinusoidal signals **ST36D**: 1Vp-p differential sinusoidal signals
Main scale grating pitch	8µm
Signal output pitch	4µm
Effective range	10 to 3000mm
Resolution	0.01, 0.02, 0.05, 0.1µm
Accuracy (20°C)*1	±0.5µm, ±1µm, ±2µm(/m)
Maximum response speed*2	1200mm/s
Scale reference point	Center point (10 to 80mm) 50mm pitch (100 to 3000mm)
Power supply voltage	DC5V ±5%
Operating temperature/humidity range	0 to 40°C/ 20 to 80% (no condensation)
Storage temperature/ humidity range	–20 to 60°C/ 20 to 80% (no condensation)
Head cable length	1m (high-flex connecting cable)

*1:

Effective range	Accuracy
300mm or less	±0.5µm
500mm or less	±1µm
1000mm or less	±2µm
3000mm or less	±2µm/m

*2: Maximum response speed when the sinusoidal signals are output

- Any scale size drawings are available on request.

Mounting dimensions

Unit: mm

• 10 to 80mm (Adhesive fixing type)

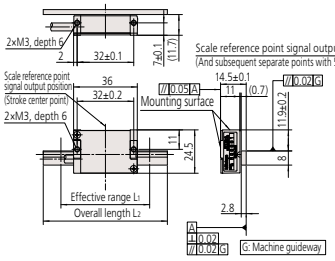

• 100 to 3000mm

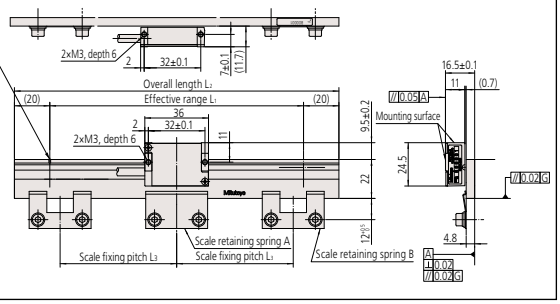

Dimensions of scale units

Order No.*	Code*	Effective range L1 (mm)	Overall length L2 (mm)	Scale fixing pitch L3 (mm)	Retaining spring A	Retaining spring B
579-501-0□	**ST36◇-10**	10	30	–	–	–
579-502-0□	**ST36◇-25**	25	45	–	–	–
579-503-0□	**ST36◇-50**	50	70	–	–	–
579-504-0□	**ST36◇-75**	75	90	–	–	–
579-505-0□	**ST36◇-80**	80	100	–	–	–
579-506-0□	**ST36◇-100**	100	140	50	1 pc.	2 pcs.
579-507-0□	**ST36◇-150**	150	190	75	1 pc.	2 pcs.
579-508-0□	**ST36◇-200**	200	240	100	1 pc.	2 pcs.
579-509-0□	**ST36◇-250**	250	290	60	1 pc.	4 pcs.
579-510-0□	**ST36◇-300**	300	340	75	1 pc.	4 pcs.
579-511-0□	**ST36◇-350**	350	390	85	1 pc.	4 pcs.
579-512-0□	**ST36◇-400**	400	440	100	1 pc.	4 pcs.
579-513-0□	**ST36◇-450**	450	490	75	1 pc.	6 pcs.
579-514-0□	**ST36◇-500**	500	540	80	1 pc.	6 pcs.
579-515-0□	**ST36◇-600**	600	640	100	1 pc.	6 pcs.
579-516-0□	**ST36◇-700**	700	740	85	1 pc.	8 pcs.
579-517-0□	**ST36◇-800**	800	840	100	1 pc.	8 pcs.

Order No.*	Code*	Effective range L1 (mm)	Overall length L2 (mm)	Scale fixing pitch L3 (mm)	Retaining spring A	Retaining spring B
579-518-0□	**ST36◇-900**	900	940	90	1 pc.	10 pcs.
579-519-0□	**ST36◇-1000**	1000	1040	100	1 pc.	10 pcs.
579-520-0□	**ST36◇-1100**	1100	1140	90	1 pc.	12 pcs.
579-521-0□	**ST36◇-1200**	1200	1240	100	1 pc.	12 pcs.
579-522-0□	**ST36◇-1300**	1300	1340	130	1 pc.	10 pcs.
579-523-0□	**ST36◇-1400**	1400	1440	100	1 pc.	14 pcs.
579-524-0□	**ST36◇-1500**	1500	1540	125	1 pc.	12 pcs.
579-525-0□	**ST36◇-1600**	1600	1640	100	1 pc.	16 pcs.
579-526-0□	**ST36◇-1700**	1700	1740	120	1 pc.	14 pcs.
579-527-0□	**ST36◇-1800**	1800	1840	100	1 pc.	18 pcs.
579-528-0□	**ST36◇-2000**	2000	2040	100	1 pc.	20 pcs.
579-529-0□	**ST36◇-2200**	2200	2240	100	1 pc.	22 pcs.
579-530-0□	**ST36◇-2400**	2400	2440	100	1 pc.	24 pcs.
579-531-0□	**ST36◇-2500**	2500	2540	95	1 pc.	26 pcs.
579-532-0□	**ST36◇-2600**	2600	2640	100	1 pc.	26 pcs.
579-533-0□	**ST36◇-2800**	2800	2840	100	1 pc.	28 pcs.
579-534-0□	**ST36◇-3000**	3000	3040	100	1 pc.	30 pcs.

* The above code numbers are for recommended items marked with ● / ◎ symbols.
If recommended specifications meet your requirements, use these code numbers to order.
* The □ and ◇ symbols in the tables above have the following meanings:
◇→A (2-phase sinusoidal signals): □→1
◇→B (2-phase square wave signals + reset input): □→2
◇→C (2-phase sinusoidal signals + 2-phase square wave signals): □→3
◇→D (1Vp-p differential): □→4

Fiber Scale ST-F11

SERIES 579 — Ultra Compact Linear Scale

FEATURES

- Ultra-compact detector head: 5mm width (S-Type)
- High resolution: 100 nm (0.1µm), 50 nm (0.05µm), 10 nm (0.01µm)
- Isolated heat source. No heat source at the detector head.
- Immune to EMI.
- Easy installation. LEDs on the processor indicate which direction to adjust the detector head when mounting.

ST-F11

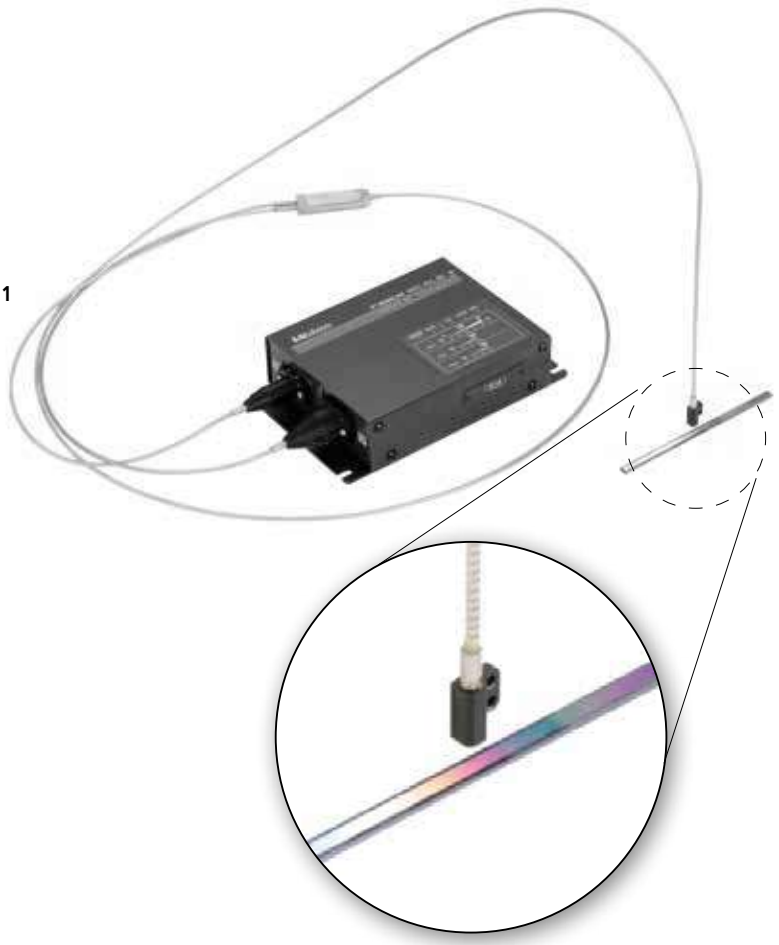

Processor LED Indicators



- Any scale size drawings are available on request.

SPECIFICATIONS

Model	ST- F11B	ST- F11C
Detection method	Diffraction interference , reflection-type linear encoder	
Grating pitch for the main scale	4 µm	
Signal output pitch	2 µm	
Output signal	2-phase-shifted square wave (+ reset input)	2-phase-shifted square wave 2-phase-shifted sine wave
Resolution	10 nm / 50 nm / 100 nm (switchable)	
Effective length	4" / 100 mm	
Accuracy at 20°C	±1 µm, ±2 µm (custom-holder type)	
Maximum response speed	800 mm/s (For the sine wave)	
Read head size (Selectable)	Perpendicular (S-Type) 5x9.6x12 Parallel (L-Type) 6x17x10	
Main scale material (Selectable)	Quartz glass (expansion coefficient: 0.5 x10^{-6}) (LTE) Low thermal expansion glass (expansion coefficient: 0±0.02 x10^{-6})	
Fiber length (Selectable)	2, 3, 5, 10 m (20, 30m: custom-order)	
Maximum consumption current / operating voltage	350 mA / DC5V±5%	
Operating temperature and humidity	0~40°C 20~80%RH (no condensation)	
Storage temperature and humidity	-20~60°C 20~80%RH (no condensation)	
Functions	Alarm output, read-head attitude confirmation, signal-confirmation function	

Mitutoyo

Fiber Scale ST-F11

SERIES 579 — Ultra Compact Linear Scale

Dimensions of Processor

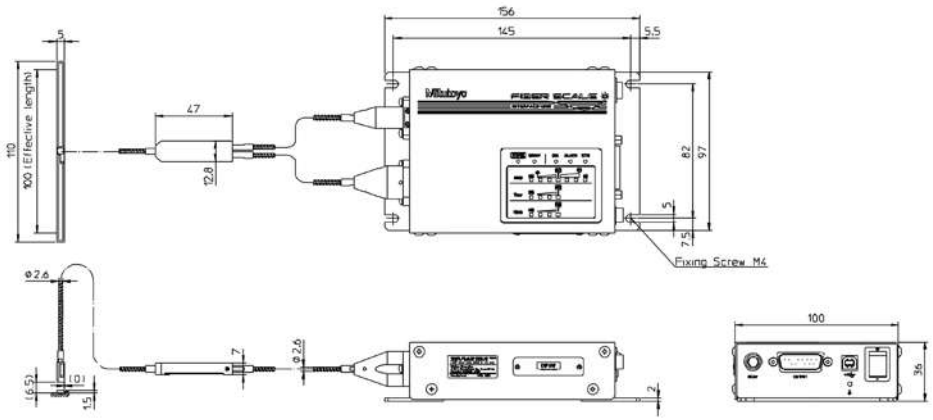

Dimensions of Detector Heads

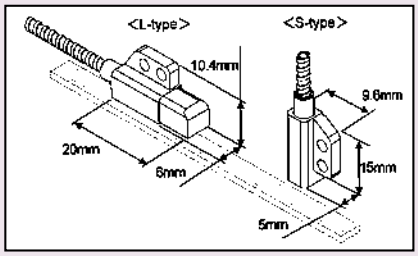

SPECIFICATIONS

Order Number	Model Number	Output Signal	Scale Material	Detector Orientation to Scale	Fiber Length
579-701-11	ST-F11B-100A-S02	2 Phase Square	Quartz Glass	Parallel	2m
579-702-11	ST-F11B-100A-S03	2 Phase Square	Quartz Glass	Parallel	3m
579-703-11	ST-F11B-100A-S05	2 Phase Square	Quartz Glass	Parallel	5m
579-704-11	ST-F11B-100A-S10	2 Phase Square	Quartz Glass	Parallel	10m
579-701-12	ST-F11B-100B-S02	2 Phase Square	LTE Glass	Parallel	2m
579-702-12	ST-F11B-100B-S03	2 Phase Square	LTE Glass	Parallel	3m
579-703-12	ST-F11B-100B-S05	2 Phase Square	LTE Glass	Parallel	5m
579-704-12	ST-F11B-100B-S10	2 Phase Square	LTE Glass	Parallel	10m
579-701-21	ST-F11C-100A-S02	2 Phase Square / 2 phase sine	Quartz Glass	Parallel	2m
579-702-21	ST-F11C-100A-S03	2 Phase Square / 2 phase sine	Quartz Glass	Parallel	3m
579-703-21	ST-F11C-100A-S05	2 Phase Square / 2 phase sine	Quartz Glass	Parallel	5m
579-704-21	ST-F11C-100A-S10	2 Phase Square / 2 phase sine	Quartz Glass	Parallel	10m
579-701-22	ST-F11C-100B-S02	2 Phase Square / 2 phase sine	LTE Glass	Parallel	2m
579-702-22	ST-F11C-100B-S03	2 Phase Square / 2 phase sine	LTE Glass	Parallel	3m
579-703-22	ST-F11C-100B-S05	2 Phase Square / 2 phase sine	LTE Glass	Parallel	5m
579-704-22	ST-F11C-100B-S10	2 Phase Square / 2 phase sine	LTE Glass	Parallel	10m
579-711-11	ST-F11B-100A-L02	2 Phase Square	Quartz Glass	Perpendicular	2m
579-712-11	ST-F11B-100A-L03	2 Phase Square	Quartz Glass	Perpendicular	3m
579-713-11	ST-F11B-100A-L05	2 Phase Square	Quartz Glass	Perpendicular	5m
579-714-11	ST-F11B-100A-L10	2 Phase Square	Quartz Glass	Perpendicular	10m
579-711-12	ST-F11B-100B-L02	2 Phase Square	LTE Glass	Perpendicular	2m
579-712-12	ST-F11B-100B-L03	2 Phase Square	LTE Glass	Perpendicular	3m
579-713-12	ST-F11B-100B-L05	2 Phase Square	LTE Glass	Perpendicular	5m
579-714-12	ST-F11B-100B-L10	2 Phase Square	LTE Glass	Perpendicular	10m
579-711-21	ST-F11C-100A-L02	2 Phase Square / 2 phase sine	Quartz Glass	Perpendicular	2m
579-712-21	ST-F11C-100A-L03	2 Phase Square / 2 phase sine	Quartz Glass	Perpendicular	3m
579-713-21	ST-F11C-100A-L05	2 Phase Square / 2 phase sine	Quartz Glass	Perpendicular	5m
579-714-21	ST-F11C-100A-L10	2 Phase Square / 2 phase sine	Quartz Glass	Perpendicular	10m
579-711-22	ST-F11C-100B-L02	2 Phase Square / 2 phase sine	LTE Glass	Perpendicular	2m
579-712-22	ST-F11C-100B-L03	2 Phase Square / 2 phase sine	LTE Glass	Perpendicular	3m
579-713-22	ST-F11C-100B-L05	2 Phase Square / 2 phase sine	LTE Glass	Perpendicular	5m
579-714-22	ST-F11C-100B-L10	2 Phase Square / 2 phase sine	LTE Glass	Perpendicular	10m

Pulse Signal Interface Unit PSU-200

SERIES 539



- The **PSU-200** splits the sinusoidal signal output by Mitutoyo linear scales into a minimum of four and a maximum of 200 divisions, and converts the signal to a square-wave signal so that NC feedback systems, measurement control devices, etc., can be used with linear scales in order to achieve highly accurate positioning.

SPECIFICATIONS

Order No.	**539-005**
Model	**PSU-200**
Number of axes	1 axis
Input	Input connector DA-15S-N (JAE) or equivalent Input signal: 2-phase sinusoidal and the reference voltage, reference point, scale alarm
Output	Output connector: MR-20RMA (HONDA TSUSHIN KOGYO CO., LTD.) Output signal: 2-phase square wave signals (PA, PB), reference point (PZ), alarm, alarm reset, photo-coupler
Number of splits	4, 8, 10, 20, 40, 80, 100, 200 (Selectable with the switch)
Function	Setting the number of slits, setting the minimum edge interval, and maximum response speed. Detection of broken wires or short circuits and abnormalities (alarm), detection of signal errors (alarm). Power supply voltage low-alarm (warning light only), switching between high-impedance mode and alarm-signal output mode. Reference position detection light, hysteresis width settings (directly linked to No. of divisions), external alarm reset input (photocoupler), switching directions
Power supply voltage	5VDC ±5%
Current consumption	200mA
Storage temperature range	–20°C to 70°C
Operating temperature range	0°C to 40°C
Dimensions	160(W)×100(D)×28(H)mm
Mass	Approx. 620g

DIMENSIONS

Unit: mm

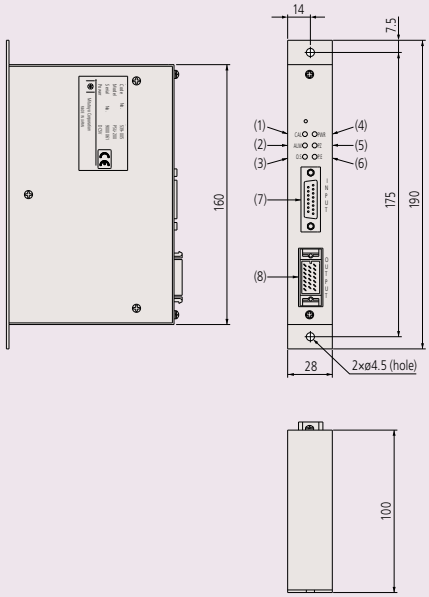

System configuration

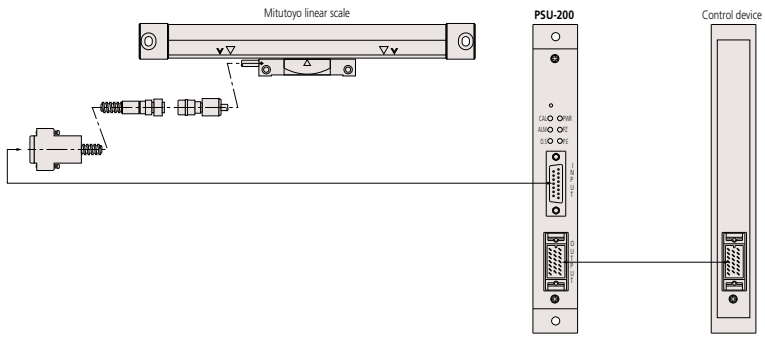

Tests for Evaluating Linear Scales

1. Testing within the service temperature range
Confirms that there is no performance abnormality of a unit within the service temperature range and that data output is according to the standard.

2. Temperature cycle (dynamic characteristics) test
Confirms that there is no performance abnormality of a unit during temperature cycling while operating and that data output is according to the standard.

3. Vibration test (Sweep test)
Confirms that there is no performance abnormality of a unit while subject to vibrations of a frequency ranging from 30Hz to 300Hz with a maximum acceleration of 29.42m/s^2.

4. Vibration test (Acceleration test)
Confirms that there is no performance abnormality of a unit subject to vibrations at a specific, non-resonant frequency. (Approx. 98.07m/s^2)

5. Noise test
The noise test conforms to EMC Directive EN61326-1+A1:1998.

6. Package drop test
This test conforms to JIS Z 0200 (Heavy duty material drop test)

Glossary

Absolute system
A measurement mode in which every point measurement is made relative to a fixed origin point.

Incremental system
A measurement mode in which every point measurement is made relative to a certain stored reference point.

Origin offset
A function that enables the origin point of a coordinate system to be translated to another point offset from the fixed origin point. For this function to work, a system needs a permanently stored origin point.

Restoring the origin point
A function that stops each axis of a machine accurately in position specific to the machine while slowing it with the aid of integrated limit switches.

Sequence control
A type of control that sequentially performs control steps according to a prescribed order.

Numerical control
A way of controlling the movements of a machine by encoded commands created and implemented with the aid of a computer (CNC). A sequence of commands typically forms a 'part program' that instructs a machine to perform a complete operation on a workpiece.

Binary output
Refers to output of data in binary form (ones and zeros) that represent numbers as integer powers of 2.

RS-232C
An interface standard that uses an asynchronous method of serial transmission of data over an unbalanced transmission line for data exchange between transmitters located relatively close to each other. It is a means of communication mainly used for connecting a personal computer with peripherals.

Line driver output
This output features fast operating speeds of several tens to several hundreds of nanoseconds and a relatively long transmission distance of several hundreds of meters. A differential-voltmeter line driver (RS422A compatible) is used as an I/F to the NC controller in the linear scale system.

BCD
A notation of expressing the numerals 0 through 9 for each digit of a decimal number by means of four-bit binary sequence. Data transmission is one-way output by means of TTL or open collector.

RS-422
An interface standard that uses serial transmission of bits in differential form over a balanced transmission line. RS-422 is superior in its data transmission characteristics and in its capability of operating with only a single power supply of +5V.

Accuracy
The accuracy specification of a scale is given in terms of the maximum error to be expected between the indicated and true positions at any point, within the range of that scale, at a temperature of 20ºC. Since there is no international standard defined for scale units, each manufacturer has a specific way of specifying accuracy. The accuracy specifications given in our catalog have been determined using laser interferometry.

Narrow range accuracy
Scale gratings on a scale unit normally adopt 20µm pitch though it varies according to the kind of scale. The narrow range accuracy refers to the accuracy determined by measuring one pitch of each grating at the limit of resolution (1µm for example).

Principle of the Absolute Linear Scale (Example: ABS AT300, 500-S/H)

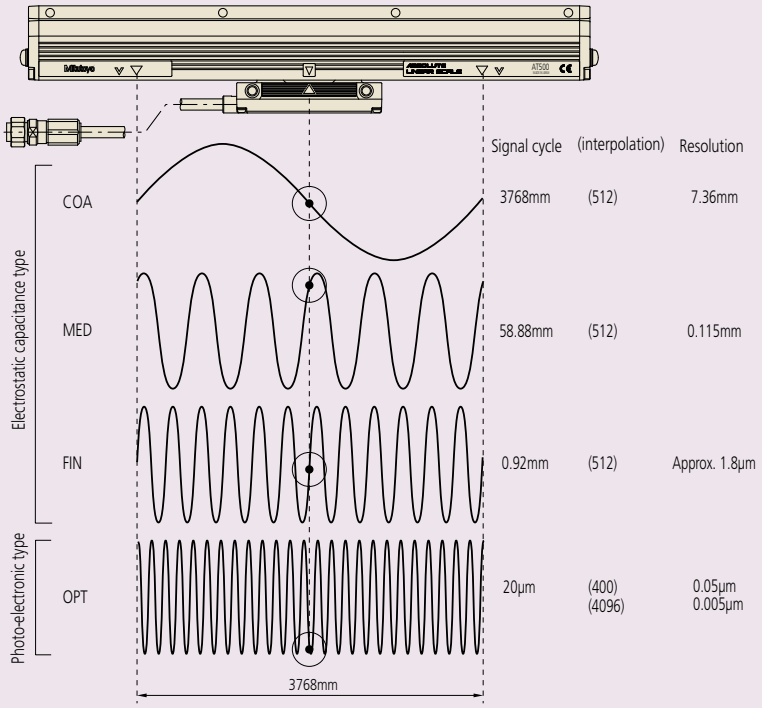

Upon supply of power to a linear scale, position readings from three capacitance-type sub-scales (COArse, MEDium and FINe) and one from a photoelectric sub-scale (OPTical) are taken. These sub-scales use such a combination of pitches, and are so positioned relative to each other, that the readings at any one position form a unique set and allow a microprocessor to calculate the position of the read head on the scale to a resolution of 0.05µm (0.005µm).

Specifying Linear Scale Accuracy

Positional Indication accuracy

The accuracy of a linear scale is determined by comparing the positional value indicated by the linear scale with the corresponding value from a laser length measuring machine at regular intervals using the accuracy inspection system as shown in the figure below. As the temperature of the inspection environment is 20˚C, the accuracy of the scale applies only in an environment at this temperature. Other inspection temperatures may be used to comply with internal standards.

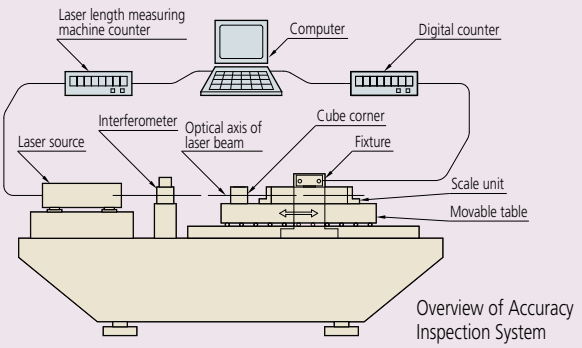

Overview of Accuracy Inspection System

The accuracy of the scale at each point is defined in terms of an error value that is calculated using the following formula:

Error = Value indicated by laser inspection system
– Corresponding value indicated by the linear scale

A graph in which the error at each point in the effective positioning range is plotted is called an accuracy diagram.
There are two methods used to specify the accuracy of a scale, unbalanced or balanced, described below.

(1) Unbalanced accuracy specification - maximum minus minimum error

This method simply specifies the maximum error minus the minimum error from the accuracy graph, as shown below. It is of the form: $E = (\alpha + \beta L)$µm. L is the effective range (mm), and α and β are factors specified for each model.

For example, if a particular type of scale has an accuracy specification of $(3 + \frac{3L}{1000})$µm and an effective range of 1000mm, E is 6µm.

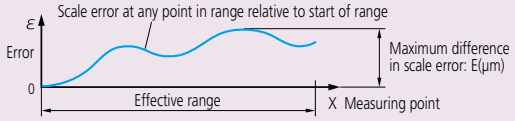

(2) Balanced accuracy specification - plus and minus about the mean error

This method specifies the maximum error relative to the mean error from the accuracy graph. It is of the form: $e = \pm \frac{E}{2}$ (µm). This is mainly used in separate-type (retrofit) scale unit specifications.

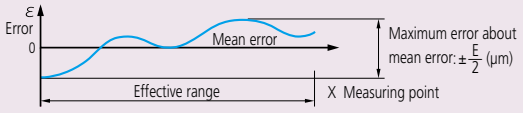

A linear scale detects displacement based on graduations of constant pitch. Two-phase sinusoidal signals with the same pitch as the graduations are obtained by detecting the graduations. Interpolating these signals in the electrical circuit makes it possible to read a value smaller than the graduations by generating pulse signals that correspond to the desired resolution. For example, if the graduation pitch is 20µm, interpolated values can generate a resolution of 1µm. The accuracy of this processing is not error-free and is called interpolation accuracy. The linear scale's overall positional accuracy specification depends both on the pitch error of the graduations and interpolation accuracy.

Mitutoyo Quality











People – Quality starts with our people. Our team is comprised of the best and the brightest in the industry.

Confidence – Confidence you have each time you rely on a Mitutoyo product.

Reliability – Reliability of the product that you use many times every day.

Accuracy – Accuracy you need to preserve tight machining tolerances.

Relationship – Relationship you have formed with Mitutoyo staff and distributors

Longevity – Longevity of a tool or instrument that maintains factory specifications.

Savings – Savings that are realized by implementing metrology solutions that reduce production costs.

Feel – Feel of a caliper or micrometer that you have come to expect.

Pride – Pride you feel when you produce the best manufactured product possible.





Profile Projectors



Microscopes



MF-B3017D



MF-UE2017D

INDEX

Profile Projectors	
PJ-A3000 Series 302-Vertical	I-2,3
PJ-H30 Series 303-High Accuracy	I-4,5
PV-5110 Series 304	I-6,7
PH-A14 Series 172	I-8,9
PH-3515F Series 172	I-10,11
Accessories for Profile Projectors	I-12
Micrometer Heads for Profile Projectors and Toolmakers' Microscopes	I-12
Workpiece Fixtures for Profile Projectors and Measuring Microscopes	I-13
Microscopes	
TM-505B/1005B Series 176 Toolmakers' Microscopes	I-14
MF Series 176 Measuring Microscopes	I-15,16
MF Series 176 Motorized Type	I-17
MF-U Series 176 High-power Multi-function	I-18,19
MF-U Series 176 Motorized Type Universal	I-20
Accessories for Measuring Microscope	I-21,22
QM-Data200 Series 264-2-D Data Processing Unit	I-23,24
Vision Unit-Series 359-Vision System Retrofit	I-25
FS-70 Series 378-For Semiconductor Inspection	I-26
VMU Series 378-Video Unit	I-27
Eyepieces Series 378	I-28
Objectives Series 378	I-28-32
MSM-400 Series 377- Stereo	I-33-36
Pocket Magnifiers Series 183	I-37
Pocket Comparators Series 183	I-37
Zoom Loupe Series 183	I-37
Clear Loupe Series 183	I-37
Quick Guide to Precision Microscopes	I-38-40



VMU-LB



VMU-L4B

Mitutoyo

PJ-A3000

SERIES 302 — Vertical Profile Projectors

FEATURES

- The PJ-A3000 Series vertical profile projectors are medium-size 11.8″ (300mm) models that feature high versatility and easy operation.
- Easy-to-read digital XY counter is located near the projection screen to minimize eye movement.
- Digital readout protractor screen facilitates angle measurement.



PJ-A3010F-200



PJ-A3005D-50



PJ-A3010F-100



PJ-A3005F-150



PJ-A3010F-200

Projection Capacity

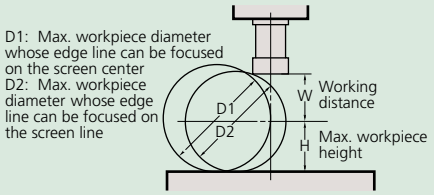

		Magnification			
		10X	20X	50X	100X
View field		ø31.5	ø15.7	ø6.3	ø3.1
W		66 (20)	32.5 (2)	12.6	5
H	-50 models*	123.5	123.5	123.5	123.5
	-100 models	91	91	91	91
	-150 models	103.5	103.5	103.5	103.5
	200 models	92.5	92.5	92.5	92.5
D1	-50 models*	224 (198)	87 (61)	27	10
	-100 models	182	87 (61)	27	10
	-150 models	207 (198)	87 (61)	27	10
	200 models	185	87 (61)	27	10
D2		154 (120)	69 (23)	25	10

( ): When using surface illumination

Optional Accessories

172-202: 10X projection lens set (Standard accessory)
172-203: 20X projection lens set
172-223: 10X projection lens
172-224: 20X projection lens
172-204: 50X projection lens
172-207: 100X projection lens
172-229: Oblique illumination mirror for 10X lens
172-230: Oblique illumination mirror for 20X lens
172-116: Standard scale (50mm)
172-117: Standard scale (2")
172-118: Reading scale (200mm)
172-161: Reading scale (300mm)
172-119: Reading scale (8")
172-162: Reading scale (12")
172-160-2: Green filter (for PJ-A3000, -50 models)
172-160-3: Green filter (for -100, -150, -200 models)
512305: Halogen bulb (24V, 150W)
383876: Vinyl cover (standard accessory)

Fixture and Stage Accessories

176-106: Rotary table (Effective diameter: 66mm)
172-196: Rotary table (Effective diameter: 100mm)
172-198: Rotary table with fine feed wheel (Effective diameter: 4" / 100mm)
176-105: Swivel center support (Max. workpiece dia.: 2.7" / 70mm)
172-197: Swivel center support (Max. workpiece dia.: 3.1" / 80mm)
176-107: Holder with clamp
172-378: V-block with clamp (Max. workpiece dia.: 1" / 25mm)
999678: Fixture mount adapter
64PMI167: Stand 22.4 x 20 x 32" (WxDxH)

Availability	PJ-A3005D-50	PJ-A3005F-150	PJ-A3010F-100 PJ-A3010F-200
176-106	✔	✔	
172-196		✔	✔*
172-198		✔	✔*
176-105	✔		
172-197		✔	✔*
176-107	✔	✔	✔*
172-378	✔	✔	✔*

* Fixture mount adapter (**999678**) is required for PJ-3010F-200



QM-Data200
264-155A: Stand-mount type
264-156A: Arm-mount type
2-D data processing unit.
(Refer to page I-23 for more details.)



332-151: Optoeye
Edge detection system for QM-Data200
12AAE671: Detector Attachment

SPECIFICATIONS

				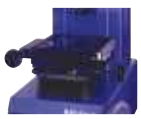	
	Model	PJ-A3010F-200	PJ-A3005F 150	PJ-A3010F-100	PJ-A3005D-50
	Order No.	**302-701A**	**302-702A**	**302-703A**	**302-704A**
Projected image		Inverted image			
Protractor screen	Effective diameter	12.4" / 315mm			
	Screen material	Fine ground glass			
	Reference line	Cross hair line			
	Angle display (LED)	Resolution: 1° or 0.01° (switchable), Range: ±360° Functions: Absolute/incremental mode switching, Zero Set			
Projection lens		Standard Accessory 10X (**172-202**)			
Magnification accuracy	Contour illumination	±0.1% or less			
	Surface illumination	±0.15% or less			
Contour illumination	Light source	Halogen bulb (24V, 150W)			
	Optical system	Telecentric system			
	Functions	2-stage brightness switch, Heat-absorbing filter			
Surface illumination	Light source	Halogen bulb (24V, 150W)			
	Optical system	Vertical illumination with a half-reflection mirror			
	XY range	8" x 4" (200 x 100mm)	6" x 2" (150 x 50mm)	4"x 4 " (100x100mm)	2" x 2" (50 x 50mm)
	Resolution	.0001" / 0.001mm	.0001" / 0.001mm	.0001" / 0.001mm	.0001"/0.001mm
	Measuring Unit	Built-in linear scales	Built-in linear scales	Built-in linear scales	Digimatic mic heads
	Table size	14.96x9.84" (380x250mm)	11.02x5.98" (280x152mm)	9.84x9.84" (250x250mm)	5.98x5.98" (152x152mm)
	Effective table area	10.47x6.69" (266x170mm)	7.24x3.23" (184x82mm)	5.6x5.6" (142x142mm)	3.23x3.23" (82x82mm)
	Max. workpiece height	3.64" (92.5mm)	4.07" (103.5mm)	3.58" (91mm)	4.86" (123.5mm)
	Functions	± direction switching, SPC output zero-setting	Zero-setting, ± direction switching, SPC output	Zero-setting, ± direction switching, SPC output	± direction switching, SPC output zero-setting
Power supply		120V AC, 50/60Hz			
Mass		308 lbs. (140kg)	255 lbs. (116kg)	246 lbs. (112kg)	235 lbs. (107kg)
Standard accessories		10X projection lens set, masking shield, power cord, halogen bulb, fuse, grounding wire, allen wrench, vinyl cover			

DIMENSIONS

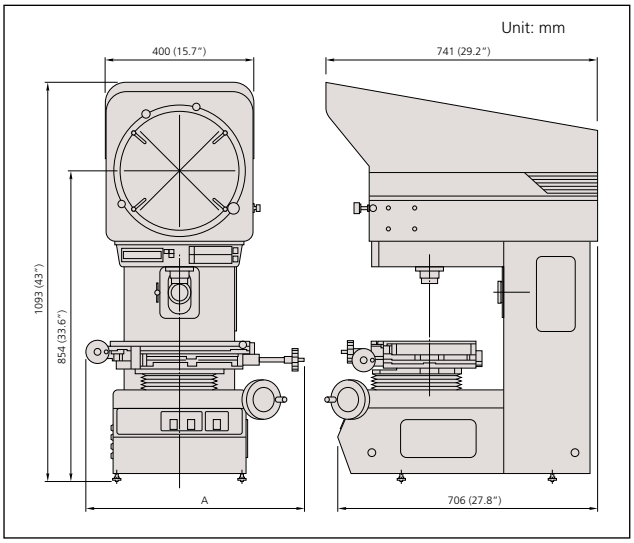

Model	PJ-A3005D-50	PJ-A3010F-100	PJ-A3005F-150	PJ-A3010F-200
A	17.9" / 455mm	16.8" / 427mm	17.6" / 446mm	23.3" / 593mm

PJ-H30

SERIES 303 — High-Accuracy Profile Projectors

By separating axial motion, and stabilizing the XY measuring table in the vertical direction, high measuring accuracy of (3+0.02L)µm has been achieved on the PJ-H30 Series Profile Projectors. Focusing is accomplished by moving the screen head itself up and down with the hand wheel or motorized unit. The power focusing (PJ-H30D type) provides higher performance.

FEATURES

- Newly designed optical system with high NA lenses provides drastically brighter and clearer screen images during surface illumination.
- The three-lens mounting turret includes a 10X lens as standard. Four types of projection lenses (5X, 20X, 50X, 100X) are available.



Switchable surface illumination: vertical or oblique

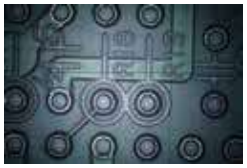

Vertical illumination

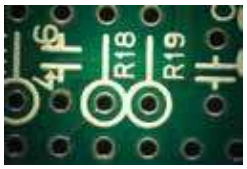

Oblique illumination



PJ-H30A3017B
XY stage travel range: 12x7" / 300x170mm

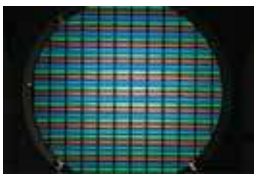

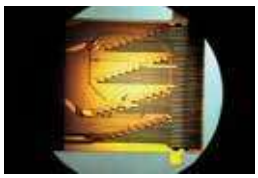
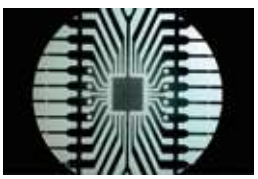



Projection Capacity

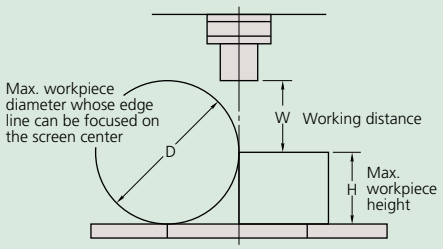

Unit: mm

	Magnification				
	5X	10X	20X	50X	100X
View field	ø61.2	ø30.6	ø15.3	ø6.12	ø3.06
H	100	100	100	100	100
W	66	70.5	56.5	50	50
D	148	197	137	114	114

Optional Accessories

172-271: 5X projection lens
172-472: 10X projection lens (standard accessory)
172-473: 20X projection lens
172-474: 50X projection lens
172-475: 100X projection lens
172-116: Standard scale (50mm)
172-117: Standard scale (2")
172-118: Reading scale (200mm)
172-161: Reading scale (300mm)
172-119: Reading scale (8")
172-162: Reading scale (12")
12AAG981: Green filter
172-269: Machine stand
512305: Halogen bulb (24V, 150W) (standard accessory)
383876: Vinyl cover (standard accessory)

Fixture and Stage Accessories

172-198: Rotary table (Effective diameter: 4" / 100mm)
176-305: Rotary table (Effective diameter: 7.2" / 183mm)
176-306: Rotary table (Effective diameter: 9.4" / 240mm)
176-105: Swivel center support (Max. workpiece dia.: 2.8" / 70mm)
172-197: Swivel center support (Max. workpiece dia.: 3.1" / 80mm)
176-107: Holder with clamp
172-378: V-block with clamp (Max. workpiece dia.: 1" / 25mm)
176-317: Fixture mount adapter C
176-304: Fixture mount adapter A

Availability	Models	
	PJ-H30A1010B	PJ-H30A2017B
	PJ-H30B1010B	PJ-H30B2017B
	PJ-H30D1010B	PJ-H30D2017B
	PJ-H30A2010B	PJ-H30A3017B
	PJ-H30B2010B	PJ-H30B3017B
	PJ-H30D2010B	PJ-H30D3017B
172-198	✔**	✔****
176-305	✔**	
176-306		✔****
176-107 *	✔**	✔****
172-378 *	✔**	✔****
172-197 *	✔**	✔****
176-105	✔***	✔***

*: Able to attach to a Rotary table (172-198 or 176-305)
**: Fixture mount adapter C (176-317) is required.
***: Rotary table (172-198) is required.
****: Fixture mount adapter A (176-304) is required.



QM-Data200
264-155A: Stand-mount type
264-156A: Arm-mount type*
*Attachment stand (12AAG982) is required.
2-D data processing unit.
(Refer to page I-23 for more details.)



332-151: Optoeye
Edge detection system for QM-Data200
12AAE671: Detector Attachment

					
Manual Focus type	Model No.	PJ-H30A1010B	PJ-H30A2010B	PJ-H30A2017B	PJ-H30A3017B
	Order No.	**303-712-1A**	**303-713-1A**	**303-714-1A**	**303-715-1A**
Power Focus, built-in OPTOEYE type	Model No.	PJ-H30D1010B	PJ-H30D2010B	PJ-H30D2017B	PJ-H30D3017B
	Order No.	**303-732-1A**	**303-733-1A**	**303-734-1A**	**303-735-1A**
Projected Image		Erect image			
Protractor screen	Effective diameter	12" / 306mm			
	Screen material	Fine ground glass			
	Reference line	Cross hair line			
	Screen rotation	±360°, fine feed and clamp			
	Angle display (LED)	Resolution: 1° or 0.01° (switchable), Range: ±370°, Functions: Absolute/incremental mode switching, Zero set			
Projection lens		Standard accessory: 10x (172-472), Optional accessories: 2X, 5X, 20X, 50X, 100X			
Lens mount		3-lenses mounting turret			
Magnification accuracy	Contour illumination	±0.1% or less			
	Surface illumination	±0.15% or less			
Contour illumination	Light source	Halogen bulb (24V 150W)			
	Optical system	Zoom telecentric system			
	Functions	Brightness adjustment, Heat-absorbing filter, Cooling fan			
Surface illumination	Light source	Halogen bulb (24V 150W)			
	Optical system	Vertical / Oblique illumination with an adjustable condenser lens			
	Functions	Non-stepped brightness adjustment, Heat-absorbing filter, Cooling fan			
	XY Range	4 x 4" 100 x 100mm	8 x 4" 200 x 100mm	8 x 6.7" 200 x 170mm	12 x 6.7" 300 x 170mm
	Resolution	.0001" / 0.001mm			
	Measuring unit	Built-in Linear scale			
	Table size	11.8 x 9.4" 300 x 240mm	13.8 x 11" 350 x 280mm	16.1 x 13.5" 410 x 342mm	20 x 13.5" 510 x 342mm
	Effective table area	7.1 x 5.9" 180 x 150mm	9.8 x 5.9" 250 x 150mm	10.6 x 9.4" 270 x 240mm	14.6 x 9.4" 370 x 240mm
	Max. workpiece ht.	4.1" / 105mm			
	Max. workpiece load	22lbs / 10kg	22lbs / 10kg	44 lbs / 20kg	44 lbs / 20kg
Power supply		120V AC, 50/60Hz			
Mass		391lbs / 176kg	396lbs / 178kg	556lbs / 205kg	471lbs / 212kg
Standard accessories		10X projection lens set, masking shield, power cord, halogen bulb, tube fuse, grounding wire, allen wrench, vinyl cover			

DIMENSIONS

Unit: mm

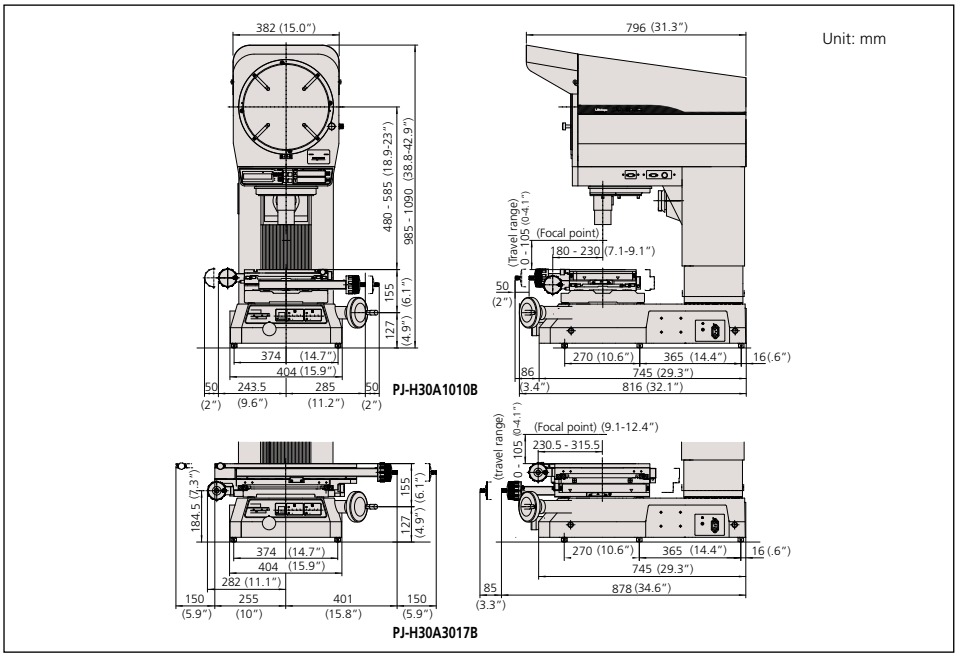

PV-5110

SERIES 304 — Profile Projectors

FEATURES

- Large 500mm screen
- Floor model uses a downward illumination system.
- Digital readout protractor screen (including zero-setting, ABS/INC coordinate switching functions) for easy and error-free angle measurement.
- Angled screen allows projected images to be easily traced or compared with a template.
- The oblique surface illumination system provides clear and bright images, allowing easy inspection of non-reflective workpieces such as plastic parts or printed materials.



PV-5110



PV-5110

Projection Capacity

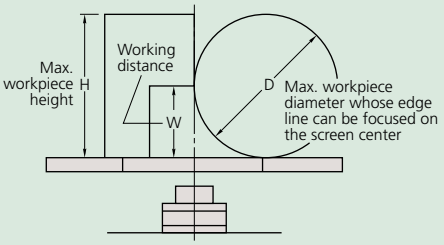

Unit: mm

	Magnification				
	5X	10X	20X	50X	100X
View field	ø101.6	ø50.8	ø25.4	ø10.16	ø5.08
H	125	181	206	87	87
W	60 (27)	60	60	32.4	22.5
D	120	120	120	64.8	45

( ): When using surface illumination

Optional Accessories

172-401: 5X projection lens set
172-406: 5X projection lens
172-402: 10X projection lens set (standard accessory)
172-409: 10X projection lens
172-403: 20X projection lens set
172-411: 20X projection lens
172-404: 50X projection lens set
172-413: 50X projection lens
172-405: 100X projection lens set
172-415: 100X projection lens
172-422: Surface illumination unit (standard accessory)
172-116: Standard scale (50mm)
172-117: Standard scale (2")
172-118: Standard scale (200mm)
172-119: Standard scale (8")
172-161: Reading scale (300mm)
172-329: Reading scale (600mm)
172-162: Reading scale (12")
172-160-2: Green filter (standard accessory)
172-319: Canopy
512305: Halogen bulb (24V, 150W) (standard accessory)
510189: Vinyl cover (standard accessory)

Fixture and Stage Accessories

172-196: Rotary table*
(Effective diameter: 4" / 100mm)
172-198: Rotary table with fine feed wheel*
(Effective diameter: 4" / 100mm)
172-197: Swivel center support*
(Max. workpiece dia.: 3.1" / 80mm)
176-107: Holder with clamp*
172-378: V-block with clamp*
(Max. workpiece dia.: 1" / 25mm)
*Fixture mount adapter (**999678**) is required.



KA Counter (174-183A)
(Refer to page H-7 for more details.)



QM-Data200
264-155A: Stand-mount type
264-156A: Arm-mount type
2-D data processing unit.
(Refer to page I-23 for more details.)



332-151: **Optoeye**
Edge detection system for QM-Data200
12AAE672: Detector Attachment (B)

SPECIFICATIONS

Model No.		PV-5110
Order No.		**304-919A**
Projected image		Invert image
Protractor screen	Effective diameter	20" / 508mm
	Screen material	Fine ground glass
	Reference line	Cross hair line
	Screen rotation	±360°, fine feed and clamp
	Angle display (LED)	Resolution: 1' or 0.01°(switchable), Range: ±370°, Functions: Absolute/incremental mode switching, Zero set
Projection lens		Standard accessory: 10x(172-472), Optional accessories: 5X, 20X, 50X, 100X
Magnification accuracy	Contour illumination	±0.1% or less
	Surface illumination	±0.15% or less
Contour illumination	Light source	Halogen bulb (24V 150W)
	Optical system	Zoom telecentric system
	Functions	2-step brightness switch, Heat-absorbing filter, Cooling fan
Surface illumination	Light source	Halogen bulb (24V 150W)
	Optical system	Vertical illumination
	Functions	Adjustable condenser lens. Oblique illumination (for 5X, 10X, and 20X), 2-step brightness switch, Heat-absorbing filter, Cooling fan
	XY Range	8 x 4" / 200 x 100mm
	Resolution	.0001" / 0.001mm*
	Measuring unit	Built-in Linear scale
	Table size	15 x 9.8" / 380 x 250mm
	Effective table area	10.5 x 6.7" / 266 x 170mm
	Max. workpiece height	See (H) on page I-6
	Max. workpiece load	11lbs / 5kg
Power supply		120V AC, 50/60Hz
Mass		467lbs / 210kg
Standard accessories		200x100mm (8" x 4") stage, 10X projection lens set, Surface illumination unit. Counter stand for KA counter, power cord, halogen bulb, fuse, grounding wire, allen wrench, vinyl cover

* Counter not included

DIMENSIONS

Unit: mm

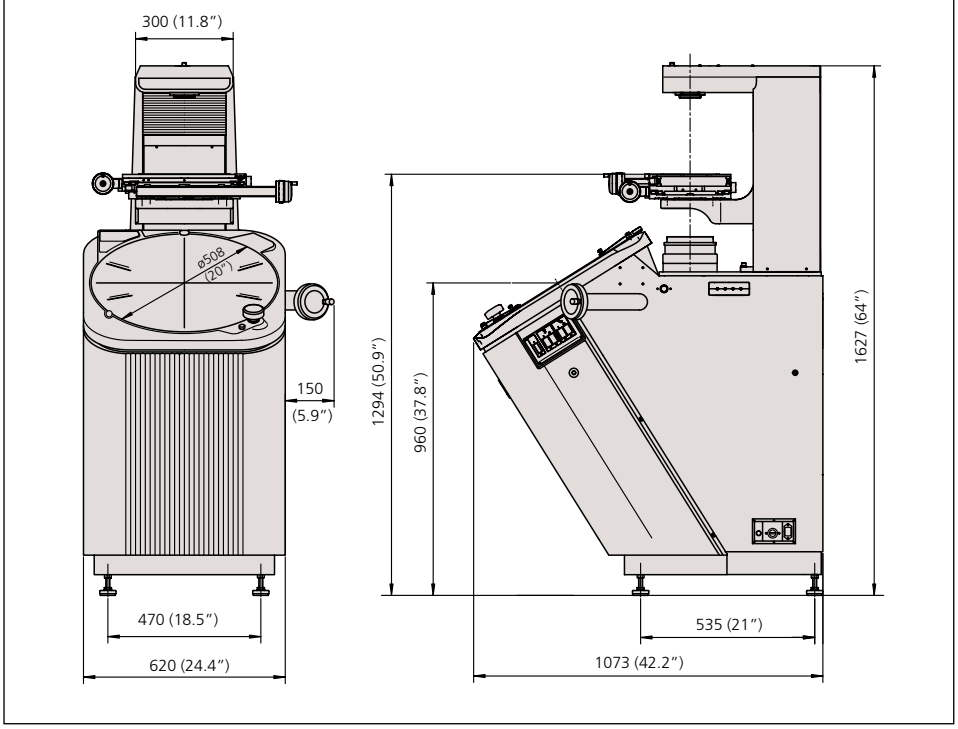

PH-A14

SERIES 172 — Profile Projector

FEATURES

- Benchtop model uses a horizontal optical system.
- Suitable for thread pitch measurements—blurred or distorted images will not be produced when workpiece is angled.
- Inverted image on the day-bright screen.
- 14" (356mm) diameter vernier protractor screen with solid line cross-hairs for easy alignment.
- Heavy-duty workpiece table incorporates linear scales for fast, accurate measurement.



PH-A14

Projection Capacity

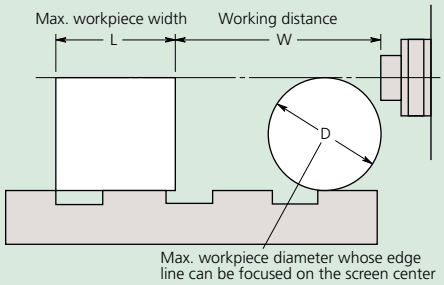

PH-A14 Unit: mm

	Magnification			
	10X	20X	50X	100X
View field	35.6	17.3	7.12	3.56
L	235	235	80	109
W	93	40	14.6	11
D	105	105	30.4	19

Optional Accessories

172-011: 10X projection lens (standard accessory)
172-012: 20X projection lens
172-013: 50X projection lens set
172-014: 100X projection lens set
172-116: Standard scale (50mm)
172-117: Standard scale (2")
172-118: Reading scale (200mm)
172-161: Reading scale (300mm)
172-119: Reading scale (8")
172-162: Reading scale (12")
172-286: Green filter
512305: Halogen bulb (24V, 150W) (standard accessory)

Fixture and Stage Accessories
172-142: Center support
172-143: Center support riser
172-144: Rotary vise
(Max. workpiece dia.: 2.4" / 60mm)
172-234: V-block with clamp
(Max. workpiece dia.: 2" / 50mm)
172-132: Vertical holder
64AAA129B: Machine stand 23"W x 45" D x 20"H



KA Counter (174-183A)
(Refer to page H-7 for more details.)
64AAB149: Counter stand



QM-Data200
2-D data processing unit.
264-155A: Stand mount type
264-156A: Arm mount type
(Refer to page I-23 for more details.)



332-151: **Optoeye**
Edge detection system for QM-Data 200
12AAE671: Detector attachment (A)

SPECIFICATIONS

Model No.		PH-A14
Order No.		**172-810-10A**
Projected image		Inverted image
Protractor screen	Effective diameter	14" /356mm
	Screen material	Fine ground glass
	Reference line	Cross hair line
	Screen rotation	±360°, fine feed and clamp
	Angle display	Vernier reading, Resolution: 2'
Projection lens		Standard accessory: 10X (172-011), Optional accessories: 20X, 50X, 100X
Magnification accuracy	Contour illumination	±0.1% or less
	Surface illumination	±0.15% or less
Contour illumination	Light source	Halogen bulb (24V 150W)
	Optical system	Telecentric system
	Functions	Heat-absorbing filter, Cooling fan
Surface illumination	Light source	Halogen bulb (24V 150W)
	Optical system	Twin fiber optic illumination
XY Stage	Table travel (X-axis)	8" / 203.2mm
	Table size (X, Z)	16 x 6" / 407 x 153mm
	Vertical travel (Y-axis)	4" / 101.6mm
	Resolution	.00005" / 0.001mm*
	Measuring unit	Built in Linear scale
	Max. workpiece width	See (L) on page I-12
	Max. workpiece load	100lbs / 45kg
Power supply		120V AC, 50/60Hz
Mass		308lbs / 140kg
Standard accessories		10x projection lens set, work stage, power cord, halogen bulb, fuse, grounding wire, allen wrench

*Counter not included

DIMENSIONS

PH-A14

Unit: mm

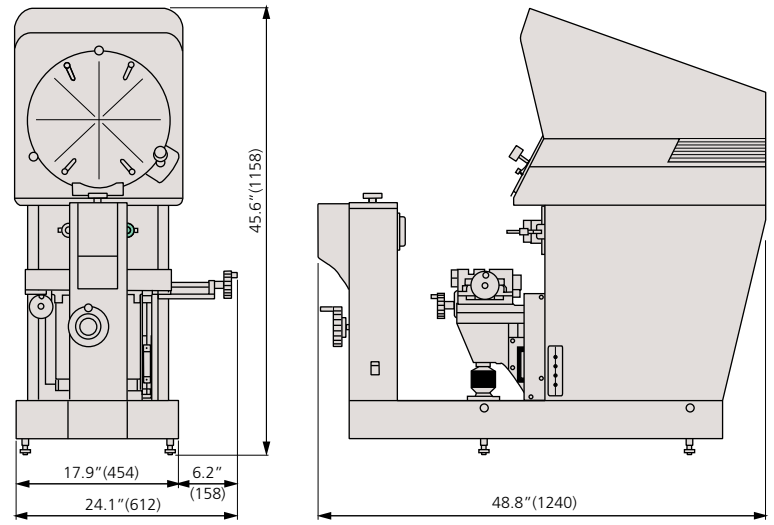

PH-3515F

SERIES 172 — Profile Projector

FEATURES

- Benchtop model uses a horizontal optical system.
- Suitable for thread pitch measurements—blurred or distorted images will not be produced when workpiece is angled.
- Erect image on the day-bright screen.
- Standard twin fiber-optic illumination.
- 14″ (353mm) diameter protractor screen with cross-hairs and staggered lines for easy alignment.
- Digital angle measurement to 1' or 0.01°.
- Heavy-duty workpiece table incorporates linear scales for fast, accurate measurement.
- Built-in linear scales for use with optional display counters.



PH-3515F

Projection Capacity

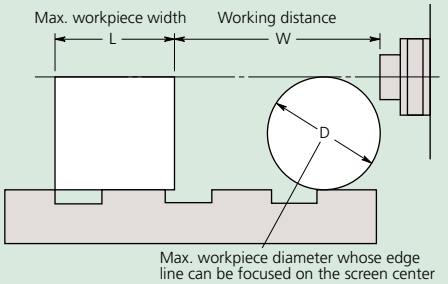

PH-3515F Unit: mm

	Magnification				
	5X	10X	20X	50X	100X
View field	70.6	35.3	17.65	7.06	3.5
L	175	235	235	80	109
W	160 (64)	93 (35)	40	14.6	9.5
D	152.4	152.4	116	30.4	19

( ): When using surface illumination

Optional Accessories

172-145: 5X projection lens set
172-175: 5X projection lens
172-184: 10X projection lens set (standard accessory)
172-011: 10X projection lens
172-173: 20X projection lens set
172-165: 50X projection lens set
172-174: 50X projection lens
172-166: 100X projection lens set
172-116: Standard scale (50mm)
172-117: Standard scale (2")
172-118: Reading scale (200mm)
172-161: Reading scale (300mm)
172-119: Reading scale (8")
172-162: Reading scale (12")
172-286: Green filter
512305: Halogen bulb (24V, 150W) (standard accessory)
172-423 Twin surface illumination
12BAA653 Fiber optical illumination cable (standard accessory)
12BAA637 Halogen reflector lamp (standard accessory)
64AAB176 Machine stand
383228: Vinyl cover (standard accessory)

Fixture and Stage Accessories*
172-142: Center support
172-143: Center support riser
172-144: Rotary vise (Max. workpiece dia.: 2.3" / 60mm)
172-234: V-block with clamp
(Max. workpiece dia.: 2" / 50mm)
172-132: Vertical holder
172-001: Tipped-saw support stand
172-002: Cutter support stand
* See page I-13 for details



KA Counter (174-183A)
(Refer to page H-7 for more details.)
64AAB149: Counter stand



QM-Data200
2-D data processing unit.
264-155A: Stand mount type
264-156A: Arm mount type
(Refer to page I-23 for more details.)



332-151: **Optoeye**
Edge detection system for QM-Data200
12AAE671: Detector attachment (A)

SPECIFICATIONS

Model No.		PH-3515F
Order No.		**172-868A**
Projected image		Erect image
Protractor screen	Effective diameter	14" / 353mm
	Screen material	Fine ground glass
	Reference line	Cross hair line
	Screen rotation	±360°, fine feed and clamp
	Angle display (LED)	Resolution: 1' or 0.01° (switchable), Range: ±370°, Functions: Absolute/ incremental mode switching, Zero set
Projection lens		Standard accessory: 10X (172-184), Optional accessories: 5X, 20X, 50X, 100X
Magnification accuracy	Contour illumination	±0.1% or less
	Surface illumination	±0.15% or less
Contour illumination	Light source	Halogen bulb (24V 150W)
	Optical system	Telecentric system
	Functions	2-step brightness switch, Heat-absorbing filter, Cooling fan
Surface illumination (Optional accessories)	Light source	Halogen bulb (24V 150W)
	Functions	Adjustable condenser lens. Heat-absorbing filter, Cooling fan
XY Stage	Table travel (X-axis)	10" / 254mm
	Table size (X, Z)	17.7"x5.7" / 450x146mm
	Vertical travel (Y-axis)	6" / 152mm
	Resolution	0.001mm/.00005"*
	Measuring Unit	Built-in Llnear scale
	Max. workpiece width	See (L) on page I-10
	Max. workpiece load	100lbs / 45kg
Power supply		120V AC, 50/60Hz
Mass		333lbs / 150kg
Standard accessories		10X projection lens set, work stage, power cord, halogen bulb, tube fuse, grounding wire, allen wrench, Vinyl cover

* Counter not included

DIMENSIONS

Unit: mm

PH-3515F

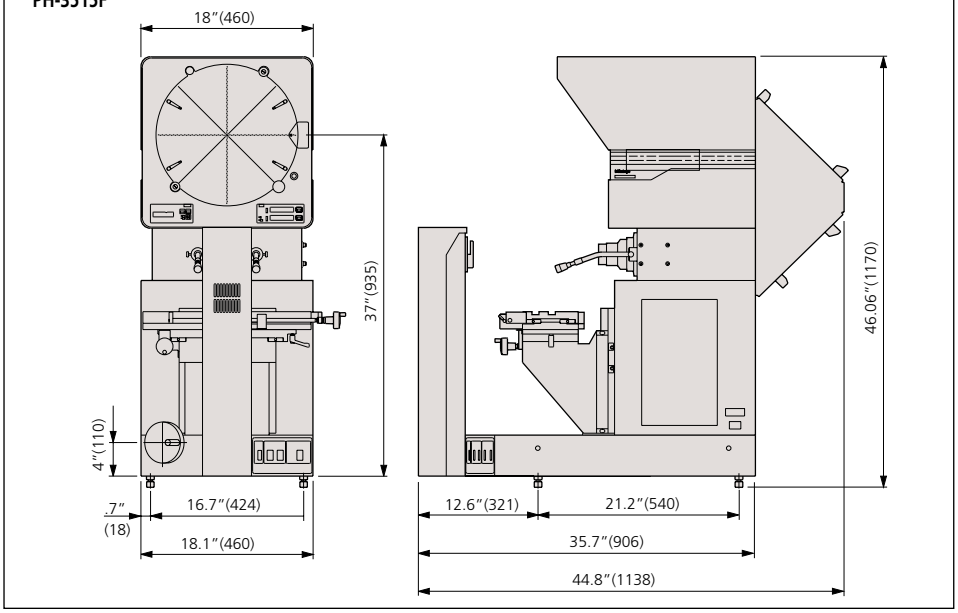

Accessories for Profile Projectors

SERIES 172 — Profile Projector

Standard Scales

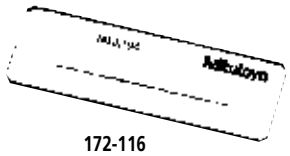

172-116

- Used for checking magnification accuracy.

Reading Scales

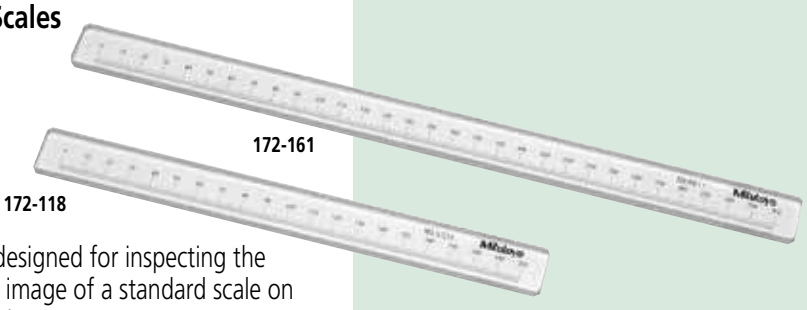

172-161

172-118

- Specially designed for inspecting the magnified image of a standard scale on the projection screen.

SPECIFICATIONS

Metric

Graduation	Range	Order No.	Accuracy (20°C)*
0.1mm	50mm	**172-116**	(3+5L/1000)µm
0.1mm	80mm	**172-330**	(3+5L/1000)µm

*L = Measured length (mm)

Inch

Graduation	Range	Order No.	Accuracy (20C)
.01"	2"	**172-117**	.00013"

SPECIFICATIONS

Metric

Graduation	Range	Order No.	Accuracy
0.5mm	200mm	**172-118**	18µm (15+15L/1000)µm
0.5mm	300mm	**172-161**	19.5µm (15+15L/1000)µm
0.5mm	600mm	**172-329**	24µm (15+15L/1000)µm

Inch

Graduation	Range	Order No.	Accuracy
.02"	8"	**172-119**	.00071"
.02"	12"	**172-162**	.00077"

Micrometer Heads

for Profile Projectors and Toolmakers' Microscopes

Micrometer Heads for XY Stage

FEATURES

- Non-rotating device is provided.
- The thimble reading can be zero-set at any spindle position.
- Black and red figures of the bi-directional graduation allow easy reading in both directions.
- Clamping stem diameter: 18mm

SPECIFICATIONS

Metric

Graduation	Range	Order No.	Accuracy	Remarks
0.005mm	25mm	**152-390**	±2µm	for X-axis
0.005mm	25mm	**152-389**	±2µm	for Y-axis

Inch

Graduation	Range	Order No.	Accuracy	Remarks
.0001"	1"	**152-391**	±.0001"	for X-axis
.0001"	1"	**152-392**	±.0001"	for Y-axis

Adjustable Micrometer Heads for XY Stages

FEATURES

- The adjustable spindle can be fed under the thimble clamped at any reading, allowing easy reference point setting.
- The spherical measuring face is carbide-tipped.
- Clamping stem diameter: 18mm



152-390

SPECIFICATIONS

Metric

Graduation	Range	Order No.	Accuracy	Remarks
0.001mm*	25mm	**152-402**	±2µm	for X-axis
0.001mm*	25mm	**152-401**	±2µm	for Y-axis

*Obtained using vernier.

Digimatic Micrometer Heads

FEATURES

- Large LCD digits for error-free reading.
- The display rotates 330° for easy viewing.
- The spindle does not rotate.
- With SPC data output.

SPECIFICATIONS

Inch/Metric

Resolution	Range	Order No.	Accuracy
.00005"/0.001mm	2" (50mm)	**164-164**	±.00015"

Optional Accessories

959149: SPC cable for series 164 (1m)
959150: SPC cable for series 164 (2m)



164-164

Overlay Chart Set

- Makes inspection of projected images easy.
- Twelve patterns are available in the set.
- Designed for use with profile projectors whose screen diameter is 300mm or larger.

Overlay chart set (12 sheets) Order No.: 12AAM027

12AAM587
Protractor (1°-grad. radial index) and radius (1mm-radius increment concentric semicircles)

12AAM588
Radius (0.1cm-reading scales and 5mm-radius increment concentric circles)

12AAM589
Radius (1X, 10X, 20X, 50X)

12AAM590
1mm-reading scales (20X, 50X)

12AAM591
10x10mm sections

12AAM592
0.5mm-reading scales

12AAM593
1x1mm sections

12AAM594
Protractor (1°-grad. diametral index)

12AAM595
1mm-reading vertical scale

12AAM596
Protractor (1°-grad. diametral index) and radius (1mm-radius increment concentric circles)

12AAM597
Metric, Unified, and Whitworth screw threads (20X)

12AAM598
Metric screw thread (100X) and 20° and 14.5° gear teeth (20X)

Workpiece Fixtures

for Profile Projectors and Measuring Microscopes

Rotary Tables

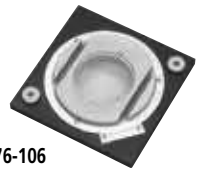

176-106



172-198

SPECIFICATIONS

Order No.	176-106	172-198
Effective glass dia.	66mm	100mm
Angle reading	6'	2' (w/ fine adjustment)
Mass	1.7kg	2.5kg

Note: Holder with clamp (**176-107**) can be mounted.

Holder with Clamp

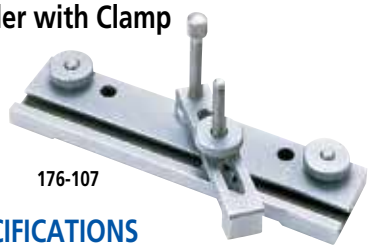

176-107

SPECIFICATIONS

Order No.	176-107
Max. workpiece height	35mm
Mass	0.42kg

Center Support



172-142

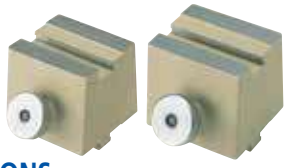

172-143

SPECIFICATIONS

Order No.	172-142
Max. workpiece height	120mm (240mm)*
Mass	3.3kg

*When using a center support riser (**172-143**)

Rotary Vise



172-144

SPECIFICATIONS

Order No.	172-144
Max. workpiece height	60mm
Width of jaw	40mm
Angle reading	5°
Mass	2.5kg

Swivel Center Supports



176-105



172-197

SPECIFICATIONS

Order No.	176-105	172-197
Max. workpiece dia.	70mm (45mm)*	80mm (65mm)*
Max. workpiece length	140mm	140mm
Swivel range	±10°	±10°
Mass	2.4kg	2.5kg

*When swiveled 10°

V-Block with Clamp



172-234



172-378

SPECIFICATIONS

Order No.	172-234	172-378
Max. workpiece dia.	50mm	25mm
Width of block	60mm	41mm
Mass	1.24kg	0.8kg

Vertical Holder

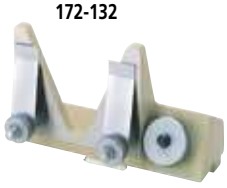

172-132

SPECIFICATIONS

Order No.	172-132
Mass	1.3kg

Mitutoyo

TM-505B/1005B

SERIES 176 — Toolmakers' Microscopes

The Mitutoyo TM Series is a toolmakers' microscope well suited for measuring dimensions and angles of machined metals. It also can be used to check the shape of screws and gears by attaching an optional reticle. The compact body makes it ideal for use on shop floors with limited space.

FEATURES

- Angle measurement is performed easily by turning the angle scale disc to align the cross-hair reticle with the workpiece image.
- Illumination intensity can be adjusted.
- Included standard accessories create an overall magnification of 30X. Magnifications can be changed from 20 - 200X by using optional objectives and/or eyepieces.



TM-A505B

SPECIFICATIONS

Model No.		TM-505B	TM-A505B	TM-1005B	TM-A1005B
Order No.		176-818A	176-820A	176-819A	176-821A
Objective lens		Standard accessory: 2X, Options: 5X, 10X			
Microscope head	Maximum height of workpiece	4.53" / 115mm		4.21" / 107mm	
Illumination unit	Transmitted illumination	Stepless brightness adjustment, White LED light source, With green filter			
	Surface illumination	Oblique single-source type, Stepless brightness adjustment, White LED light source			
Cross-travel stage	Measuring range	2" x 2" / 50×50mm		4" x 2" / 100×50mm (An optional 2"/50mm gauge block is required to cover full range. A CERA block is recommended.)	
	Table size	16" x 6" / 52×152mm		9.44" x 6" / 240×152mm	
	Usable area of the stage glass	3.8" x 3.8" / 96×96mm		6" x 3.8" / 154×96mm	
Linear measurement method		Micrometer heads optional	Micrometer heads included	Micrometer heads optional	Micrometer heads included
Resolution		N/A	.00005"/1µm	N/A	.00005"/1µm
Micrometer head travel range		N/A	2"/50mm	N/A	2"/50mm

DIMENSIONS

Unit: Inch(mm)

TM-505B

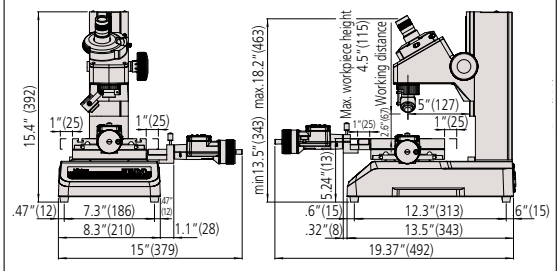

TM-1005B

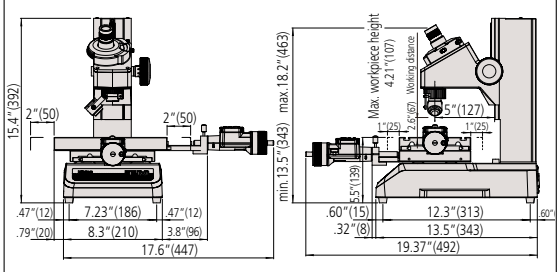

Technical Data

Optical tube	• Monocular with 30° depression angle • 90° broken cross-hair reticle (176-126) • Erect image • Diopter adjustable
Eyepiece protractor	• Graduation: 1° • Protractor range: 360° • Minimum reading by vernier: 6′
Eyepiece (176-116)	• Magnification: 15X • Field number: 13
Objective (176-138)	• Magnification: 2X • Working distance: 2.638" (67mm) • Numerical aperture: 0.07
Total magnification	• 30X
Transmitted illumination	• 3W LED • GIF (green) filter • Stepless intensity adjustment
Reflected illumination	• 3W LED • Stepless intensity adjustment • Adjustable position
Power supply	120 V AC, 50/60Hz
Power consumption	100VA
Mass	TM-505B: Approx. 30.8 lbs. (14kg) TM-1005B: Approx. 33 lbs. (15kg)

Optional Accessories

176-115: 10X eyepiece (view field dia.: 13mm)
176-116: 15X projection lens set (standard accessory)
176-117: 20X eyepiece (view field dia.: 10mm)
176-138: Objective, 2X (W.D. 67mm, N.A. 0.07) (standard accessory)
176-139: Objective, 5X (W.D.: 33mm, N.A.: 0.10)
176-137: Objective, 10X (W.D.: 14mm, N.A.: 0.14)
164-163: Digimatic micrometer head (range: 50mm, reading: 0.001mm)
164-164: Digimatic micrometer head (range: 2"/50mm, reading: .00005"/0.001mm)
152-390: Micrometer head for X-axis (range: 25mm, reading: 0.005mm)
152-389: Micrometer head for Y-axis (range: 25mm, reading: 0.005mm)
152-392: Micrometer head for Y-axis (range: 1", reading: .0001")
152-391: Micrometer head for X-axis (range: 1", reading: .0001")
611201-531: Rectangular gauge block (1")
611202-531: Rectangular gauge block (2")
176-204: Dial indicator attachment for Z-axis measurement
959149: SPC cable (2m) for Digimatic micrometer head
64PMI237: C-mount eyetube adapter

Fixture and Stage Accessories
990561: Workpiece clip (2pcs./set)
176-106: Rotary table for TM-505 (effective dia.: 66mm)
172-196: Rotary table for TM-510 (effective dia.: 100mm)
176-105: Swivel center support for TM-505 (max. workpiece dia.: 2.7" / 70mm)
172-197: Swivel center support for TM-510 (max. workpiece dia.: 3.1" / 80mm)
172-378: V-block with clamp (max. workpiece dia.: 1" / 25mm)
176-107: Holder with clamp

Illumination Units
176-344A: Bifurcated fiber illuminator
64AAB214: LED variable ring light
176-208A: LED circular illumination

Reticles
176-126: Broken cross-hair (90°) (standard accessory)
176-111: Concentric circles (up to ø4mm, 0.05mm increment)
176-135: Concentric circle (up to ø.2", .01" increment)
176-114: 60° angle
176-109: Metric screw threads (pitch = 0.25 - 1mm)
176-110: Metric screw threads (pitch = 1.25 - 2mm)
176-140: ISO metric screw threads (pitch = 0.075 - 0.7mm)
176-141: ISO metric screw threads (pitch = 0.75 - 2mm)
176-123: Unified screw threads (80 - 28TPI)
176-124: Unified screw threads (24 - 14TPI)
176-125: Unified screw threads (13 - 10TPI)
176-120: Whitworth screw threads (60 - 26TPI)
176-112: 20° involute gear teeth (normal rack type)

Protractor eyepiece



LED ring light 64AAB214



MF

SERIES 176 — Measuring Microscopes

The MF measuring microscopes can be combined with Mitutoyo's vision unit to boost its performance and data management on a PC, further improving measuring efficiency and productivity.

FEATURES

- Observation with a crisp and high-resolution erect image and a wide field of view
- Measuring accuracy that is highest in its class (and conforms to JIS B 7153)
- ML series, high-NA objectives that are specially designed for the MF series (long working distance type)
- Illumination unit (reflected/transmitted) selectable from a high-intensity LED or halogen bulb (selection required)
- Variable aperture diaphragm (reflected/transmitted) allows observation measurement while suppressing light diffraction
- Variety of standardized stages in sizes up to 400×200mm
- Quick-release mechanism useful for moving the stage quickly when measuring workpieces that are large in size or quantity
- Coarse/fine feed handles equipped as standard on both sides allow precise focus and observation measurement regardless of handedness
- High-magnification eyepiece observation up to 2000×
- Standard measuring microscope has a wide variety of optional accessories including a vision unit and various digital CCD cameras



MF-B2017D
XY stage travel range: 8 x 6.6″ / 200 x 170mm
(with optional binocular tube)



Using optional slide-type nosepiece with 2-lens mount (factory set option)

Technical Data

Optical tube	• Monocular or Binocular **(Must Choose)** • 25° depression angle • 90° broken cross-hair reticle (12AAG836) • Erect image • TV Mount 50/50
Observation image	• Erect Image
Observation type	• Bright Field
Eyepiece lens	• 10x (Included w/Tube) • 15x (Optional) • 20x (Optional)
Objective	• Magnification: 3X (Included) • W.D.: 3.03″ (77mm); N.A.: .09 • Optional: 1x, 5x, 10x, 20x, 50x, 100x
Light source	• Halogen or LED **(Must Choose)** • Adjustable aperture diaphragms • Light intensity infinitely adjustable
Transmitted illumination	• Telecentric illumination
Reflected illumination	• Koehler illumination
Display Unit	
Number of axis	• 2 axes (MF-A Type) or 3 axes (MF-B Type)
Resolution	• 0.0001″ / 0.00005″ / 0.00001″ (0.001 mm / 0.0005 mm / 0.0001 mm)
Functions	•Data output, Axis linear compensation, Metric or English Units, and more
Stage	• Precision travel (2.2+0.02L)µm accuracy • High-accuracy linear glass scales • Quick-release floating mode • Zero-set button
Power consumption	45W LED, 160W Halogen, 120V AC, 50/60 Hz
Mass	• 1010D - 148 lbs. / 67 kg • 2010D - 157 lbs. / 71 kg • 2017D - 326 lbs. / 148 kg • 3017D - 344 lbs./ 156 kg • 4020D - 357 lbs. / 162 kg

LED and Halogen Light Options for Transmitted and Reflected Illumination
(Common to MF D and MF-U D)

New design



Transmitted LED illumination unit (Common to MF/MF-U Series) | Reflected LED illumination unit (for MF Series) | Reflected LED illumination unit (for MF-U Series)



LED illumination | Halogen illumination

High Visibility Digital Display
(Common to MF D and MF-U D)



Front of display | Rear of display

Selection of XY stage by travel range

1010D: 4 x 4″ / 100 x 100mm



2010D: 8 x 4″ / 200 x 100mm



2017D: 8 x 6.7″ / 200 x 170mm



3017D: 12 x 6.6″ / 300 x 170mm



4020D: 16 x 8″ / 400 x 200mm



Mitutoyo

MF

SERIES 176 — Measuring Microscopes

SPECIFICATIONS

Model No. (XY stage size)		1010D	2010D	2017D	3017D	4020D
Order No.	MF-A	**176-861-10**	**176-862-10**	**176-863-10**	**176-864-10**	**176-865-10**
	MF-B	**176-866-10**	**176-867-10**	**176-868-10**	**176-869-10**	**176-870-10**
XY stage travel range		4 x 4" 100 x 100mm	8 x 4" 200 x 100mm	8 x 7" 200 x 170mm	12 x 7" 300 x 170mm	16 x 8" 400 x 200mm
Z-axis travel range		6" / 150mm		8.7" / 220mm		
Focusing method		Manual focusing (Coarse focusing: 30mm/rev., Fine focusing: 0.2mm/rev.)				
Measurement method		Linear encoder (2-axis model: X / Y-axis, 3-axis model: X / Y / Z-axis)				
Resolution (switchable)		.0001" / .00005" / .00001" (0.001mm / 0.0005mm / 0.0001mm)				
Measuring accuracy (at 20˚C)		XY-axis: (2.2+0.02L)µm, L = Measuring length (mm) when not loaded, JIS B 7153				
Indication accuracy (at 20˚C)		Z-axis: (5+0.04L)µm, L = Measuring length (mm), (MF-B type)				
Floating function		X and Y axes with Quick-release mechanism				
XY stage top size		11 x 11" 280 x 280mm	14 x 11" 350 x 280mm	16.1 x 13.4" 410 x 342mm	20.07 x 13.4" 510 x 342mm	24" x 13.4" 610 x 342mm
Effective glass size		7 x 7" 180 x 180mm	10 x 6" 250 x 150mm	10.6 x 9.4" 270 x 240mm	14.5 x 9.4" 370 x 240mm	17.3 x 9.4" 440 x 240mm
Swivel function		—		±5˚ (left)		±3˚ (left)
Max. stage loading		22lbs / 10kg		44lbs / 20kg		33lbs / 15kg
Max. workpiece height		6" / 150mm		8.7" / 220mm		

MF Selection of Machine Type

↓	1010	2010	2017	3017	4020	Counter	Motorized stage	Optics
A	**176-861-10**	**176-862-10**	**176-863-10**	**176-864-10**	**176-865-10**	X,Y	Manual	BF
B	**176-866-10**	**176-867-10**	**176-868-10**	**176-869-10**	**176-870-10**	X,Y,Z	Manual	BF
G	-	-	**176-781A**	**176-782A**	**176-783A**	X,Y,Z	X, Y, Z	BF
J	-	-	**176-891A**	**176-892A**	**176-893A**	X,Y,Z	Z only	BF

Example: MF-A1010D results in part number 176-861-10

Illumination Unit (must select)

Applicable Illumination Unit	LED	Halogen
Order No.	176-445A	176-447A

Eye Tube Selection (must select)

Monocular with 10X eyepiece	176-392
Binocular with 10X eyepiece	176-393

DIMENSIONS

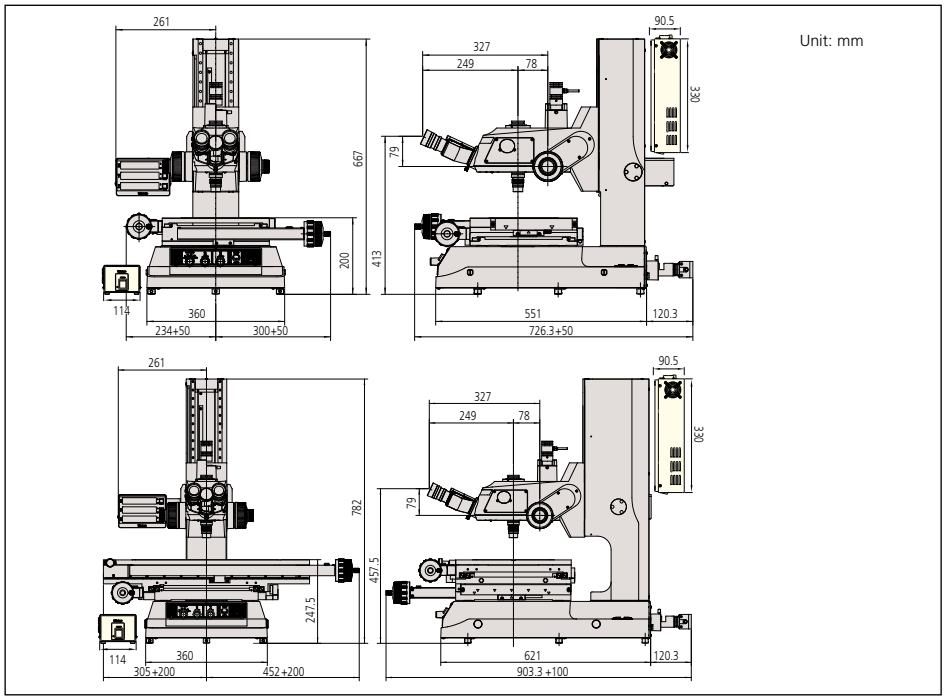

Optional Accessories

176-392: Monocular tube with 10X eyepiece
176-393: Binocular tube with 10X eyepiece set
378-866: 10X eyepiece set (view field dia.: 24mm)
378-857: 15X eyepiece set (view field dia.: 16mm)
378-858: 20X eyepiece set (view field dia.: 12mm)
375-043: Protractor eyepiece (10X)
176-313: Digital protractor eyepiece (10X)
375-036-2: 1X objective (W.D.: 61mm, N.A.: 0.03)
375-037-1: 3X objective (W.D.: 77mm, N.A.: 0.09) (std. accessory)
375-034-1: 5X objective (W.D.: 61mm, N.A.: 0.13)
375-039: 10X objective (W.D.: 51mm, N.A.: 0.21)
375-051: 20X objective (W.D.: 20mm, N.A.: 0.42)
375-052: 50X objective (W.D.: 13mm, N.A.: 0.55)
375-053: 100X objective (W.D.: 6mm, N.A.: 0.7)
176-370-1: Slide-type nosepiece (2-mount, parfocal)
176-370-2: Slide-type nosepiece (2-mount, mag. adjusted)
12AAA643: ND2 color filter (transmitted / surface)
12AAA644: ND8 color filter (transmitted / surface)
12AAA645: GIF filter (transmitted / surface) (std. accessory)
12AAA646: LB80 color filter (transmitted / surface)
375-054: 0.5X camera adapter (with C-mount adapter)
970441: C-mount adapter
513667: Halogen bulb (12V, 50W)
12BAB345: Halogen bulb (long life type, 12V, 50W)
176-308: Vibration damping stand
176-309: Mounting stand
375-056: Stage micrometer
12AAA165: Lens cleaning kit
12AAA846: Foot switch
382951: Vinyl cover (standard accessory) 2010 or less
12BAM841: Vinyl cover 2017 or greater

Illumination Units
176-367-2A: LED ring illuminator
176-343A: Twin fiber-optics illuminator
176-366A: Ring fiber-optics illuminator
12AAG806: GIF color filter (for fiber-optics illuminator)
12AAG807: LB80 color filter (for fiber-optics illuminator)

Fixture and Stage Accessories
176-107: Holder with clamp
172-378: V-block with clamp
(max. workpiece dia.: 1" / 25mm)
172-197: Swivel center support[1]
(max. workpiece dia.: 3.1" / 80mm)
176-305: Rotary stage with fine feed knob for 1010D/2010D models
176-306: Rotary stage with fine feed knob for 2017D/3017D/4020D models

[1] Fixture mount adapter (**176-310**) is required for 2010D models.
Fixture mount adapter (**176-304**) is required for 2017D/3017D/4020D models.



QM-Data200
2-D data processing unit
264-155A: Stand-mount type
12AAA807: Connecting cable set



Focus pilot FP-05
Focus assisting system



Vision Unit
PC-based vision measuring system
359-763

MF Motorized

SERIES 176 — Motorized Type Measuring Microscopes

- Motorized model of the MF Series. The X-, Y- and Z-axes are motorized, and the stage can be operated using a remote box.
- Using the optional vision unit enables the image AF function.
- Illumination unit (reflected/transmitted) can be selected from a high-intensity LED or halogen bulb (selection required).
- Variable aperture diaphragm (reflected/transmitted) allows observation measurement while suppressing light diffraction.
- A wide variety of optional accessories are offered.
- ML series, high-NA objectives that are specially designed for the MF series (long-working distance type).
- High-magnification observation up to 2000X.



MF-G2017D
- The binocular tube (eyepiece) and illumination unit are optional accessories.

SPECIFICATIONS

	Model No.	MF-G2017D	MF-G3017D	MF-G4020D
	Order No.	**176-781A**	**176-782A**	**176-783A**
Observation image		BF (Bright field)/Erect image		
Eyepiece	Diopter adjustment	10X (field number: 24), 15X, 20X Note: Monocular unit: a 10X eyepiece (standard accessory), Binocular tube: two 10X eyepieces (standard accessory)		
Objective lens		ML series 3X objective lens (standard accessory), 1X, 5X, 10X, 20X, 50X, 100X		
Illumination unit (One of the two options must be selected.)	LED illumination unit	Transmitted illumination: Telecentric system, Built-in aperture diaphragm, White LED light source, stepless light intensity control, with cooling fan Reflected illumination: Koehler illumination, Variable aperture diaphragm mechanism, White LED light source, stepless light intensity control Control unit: Power ON/OFF switch (main switch), 100 - 240V AC power input connector		
	Halogen illumination unit	Transmitted illumination: Telecentric system, Built-in aperture diaphragm, Halogen bulb (12V, 50W), stepless light intensity control, with cooling fan Reflected illumination: Koehler illumination, Variable aperture diaphragm mechanism, Halogen bulb (12V, 50W), stepless light intensity control, with cooling fan Control unit: Power ON/OFF switch (main switch), 100 - 240V AC power input connector		
Vision AF *1		Available Option		
XY-axis Vision	Measuring range	200×170mm	300×170mm	400×200mm
Z-axis	Measuring range	220mm		
Measuring accuracy *2	(When no load is put on the X- or Y-axis)	(2.2+0.02L) µm L: Measuring length (mm)		
Digital counter	Resolution	1/0.5/0.1µm .0001"/.00005"/.00001" switchable		

*1: Vision Unit **359-763** and an image AF cable **12AAN358** are sold separately.
*2: Measuring method complies with JIS B7153.

Bulb replacement for transmitted/reflected illumination Standard: Halogen bulb (12V, 50W) (**No.513667**)
Bulb life: 1,100 hours

Mitutoyo

MF-U

SERIES 176 — High-power Multi-function Measuring Microscopes

FEATURES

- Observation with a clear and flareless erect image and a wide field of view
- Measuring accuracy that is highest in its class (and conforms to JIS B 7153)
- Proven high-NA objectives from the FS optical system (long-working distance type)
- Integration of metallurgical and measurement microscope functions provides high-resolution observation and high-accuracy measurement solution
- Illumination unit (reflected/transmitted) selectable from a high-intensity LED or halogen bulb (required)
- Variable aperture diaphragm (reflected/transmitted) allows for contrast adjustment
- Variety of standardized stages in sizes up to 400 × 200 mm
- Quick-release mechanism useful for moving the stage quickly when measuring workpieces that are large in size or quantity
- High-magnification eyepiece observation up to 4000X



MF-UB3017D
XY stage travel range: 12 x 6.7″ / 300 x 170mm
(with optional turret, objective and fiber illumination)

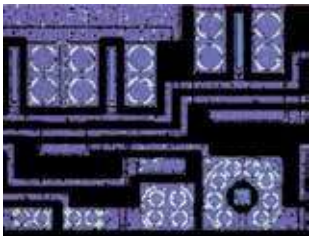

Polarized light observation:
Observing only the filtered light that vibrates in one direction. Used for observing materials with special optical characteristics, such as mineral and liquid crystal.

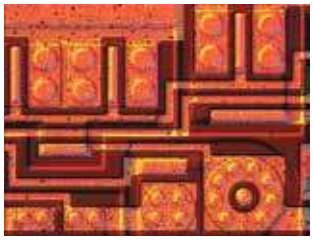

Differential interference contrast (DIC) observation:
Effective in detecting fine scratches and steps on the surface of metal, liquid crystal, and semiconductors.



Dark field (DF) observation:
Observing only the scattered light by shutting down the direct light to the objectives. The scratches and dust that cannot be viewed in the bright view field can be observed by this method in high-contrast.

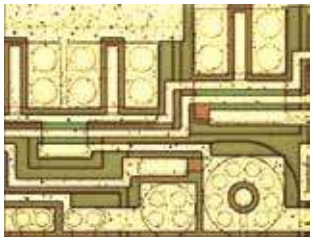

Bright field (BF) observation:
Most common method of observation. Observing directly the light reflected from the surface of the workpiece.

Technical Data

Observation image:	Erect image
Optical tube:	Siedentoph type (pupil distance adjustment: 51 - 76mm), 1X tube lens, Binocular tube (depression: 30˚), Reticle projection method, with TV mount, Optical path ratio (eyepiece/TV mount: 50/50)
Eyepiece lens:	10X (field No.: 24mm), Optional: 15X, 20X
Turret (optional):	Manual or power
Objective (optional):	M / BD Plan Apo objective from 1X to 200X
Transmitted illumination	
• Light source:	Halogen bulb (12V, 50W) or LED
• Optical system:	Telecentric illumination with adjustable aperture diaphragms
• Functions:	Light intensity adjustable, Non-stepped brightness adjustment
Surface illumination	
• Light source:	Optional halogen illumination unit (fiber-optic cold light illumination) or LED
• Optical system:	Koehler illumination with adjustable aperture diaphragms
• Functions:	Light intensity adjustable, Non-stepped brightness adjustment
Display unit:	
• No. of axis:	2 axes or 3 axes
• Resolution:	.0001″ / .00005″ / .00001″ / 0.001mm / 0.0005mm / 0.0001mm
• Functions:	Zero-setting, Direction switching, Data output (via RS-232C interface)
Power supply:	120V AC, 50/60Hz
Mass:	148lbs/67kg (1010D) / 157lbs/71kg (2010D) / 326lbs/148kg (2017D) / 344lbs/156kg (3017D) / 357lbs/162kg (4020D)

Selection of XY stage by travel range



1010D: 4 x 4″ / 100 x 100mm



2010D: 8 x 4″ / 200 x 100mm



2017D: 8 x 6.7″ / 200 x 170mm



4020D: 16″ x 8″ / 400 x 200mm

MF-U

SERIES 176 — High-Power Multi-Function Measuring Microscopes

SPECIFICATIONS

Model No. (XY stage size)		1010D	2010D	2017D	3017D	4020D
Order No.	MF-UA	**176-871-10**	**176-872-10**	**176-873-10**	**176-874-10**	**176-875-10**
	MF-UB	**176-876-10**	**176-877-10**	**176-878-10**	**176-879-10**	**176-880-10**
	MF-UC	**176-881-10**	**176-882-10**	**176-883-10**	**176-884-10**	**176-885-10**
	MF-UD	**176-886-10**	**176-887-10**	**176-888-10**	**176-889-10**	**176-890-10**
XY stage travel range		4 x 4" 100 x 100mm	8 x 4" 200 x 100mm	8 x 6.7" 200 x 170mm	12 x 6.7" 300 x 170mm	16 x 8" 400 x 200mm
Z-axis travel range		6" / 150mm		8.7" / 220mm		
Focusing method		Manual focusing (coarse focusing: 10mm/rev., fine focusing: 0.1mm/rev.)				
Measurement method		Linear encoder (2-axis model: X / Y-axis, 3-axis model: X / Y / Z-axis)				
Resolution (switchable)		.0001" / .00005" / .00001" (0.001mm / 0.0005mm / 0.0001mm)				
Measuring accuracy (at 20˚C)		XY-axis: (2.2+0.02L)μm, L = Measuring length (mm) when not loaded, JIS B 7153				
Indication accuracy (at 20˚C)		Z-axis: (5+0.04L)μm, L = Measuring length (mm)				
Floating function		X and Y axes with Quick-release mechanism				
XY stage top size		11 x 11" 280 x 280mm	14 x 11" 350 x 280mm	16 x 13.6" 410 x 342mm	20 x 13.6" 510 x 342mm	24 x 13.6" 610 x 342mm
Effective glass size		7.1 x 7.1" 180 x 180mm	10 x 6" 250 x 150mm	10.6 x 9.6" 270 x 240mm	14.6 x 9.6" 370 x 240mm	17.3 x 9.6" 440 x 240mm
Swivel function		—		±5˚ (left)		±3˚ (left)
Max. stage loading		22lbs / 10kg		44lbs / 20kg		33lbs / 15kg

Selection of machine type

Machine type	MF-UA	MF-UB	MF-UC	MF-UD
Observation type	Bright field (BF)	Bright field (BF)	Bright / Dark field (BF/DF)	Bright / Dark field (BF/DF)
Measurement system	X and Y-axis (2 axes)	X, Y and Z-axis (3 axes)	X and Y-axis (2 axes)	X, Y and Z-axis (3 axes)

Illumination Unit (must select LED or Halogen illumination unit)

Applicable Illumination Unit	LED	Halogen
Order No.	**176-446A** (transmitted & reflected)	**176-448A** (transmitted)
		176-316A (reflected)

Note: illumination unit not included. If halogen transmitted illumination is selected, then either 176-315A or 176-316A must be chosen.

DIMENSIONS

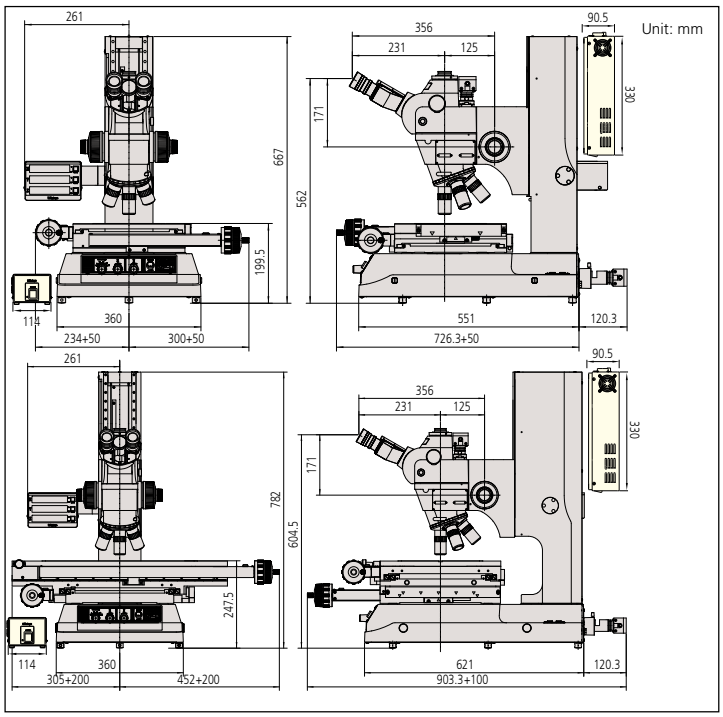

Optional Accessories

378-866: 10X eyepiece set (view field dia.: 24mm) (standard accessory)
378-857: 15X eyepiece set (view field dia.: 16mm)
378-858: 20X eyepiece set (view field dia.: 12mm)

Turret (Nosepiece) **must select**
378-018: Adjustable manual BF turret (4 port)
378-216A: Adjustable power BF turret (5 port)
176-211: Adjustable manual BF/DF turret (4 port)
176-212A: Adjustable power BF/DF turret (4 port)

Objectives
See page I-28 for objective selection

Manual and Power Turrets



Filters
378-092: Polarization unit
378-076: DIC unit for 100X, SL80X, SL50X objective
378-078: DIC unit for 50X, SL20X objective
378-079: DIC unit for 20X objective
378-080: DIC unit for 10X, 5X objective
12AAA643: ND2 color filter (for halogen illuminator, **176-448A**)
12AAA644: ND8 color filter (for halogen illuminator, **176-448A**)
12AAA645: GIF filter (standard accessory)
12AAA646: LB80 color filter (for halogen illuminator, (**176-448A**)

Camera Mounts
375-054: 0.5X camera adapter (with C-mount adapter)
970441: C-mount adapter
See page I-33 for camera selection

Bulbs
513667: Halogen bulb (12V, 50W)
12BAB345: Halogen bulb (long life type, 12V, 50W)
517181: Halogen bulb (12V, 100W)
12BAD602: High intensity halogen bulb (12V, 100W)

Illumination Units
176-315A: Halogen illumination unit (12V, 100W)
176-316A: Halogen illumination unit (12V, 150W)
176-343A: Twin fiber-optics illuminator
12AAG806: GIF color filter (for **176-315A** and **176-343A**)
12AAG807: LB80 color filter (for **176-315A** and **176-343A**)

Fixture and Stage Accessories
176-107: Holder with clamp
172-378: V-block with clamp (max. workpiece dia.: 1" / 25mm)
172-197: Swivel center support* (max. workpiece dia.: 3.1" / 80mm)
176-305: Rotary stage with fine feed knob for 1010D/2010D models
176-306: Rotary stage with fine feed knob for 2017D/3017D models
*Fixture mount adapter (**176-310**) is required for 2010D models.
Fixture mount adapter (**176-304**) is required for 2017D/3017D/4020D models.

Misc.
176-308: Vibration damping stand
176-309: Mounting stand
375-056: Stage micrometer
12AAA165: Lens cleaning kit
937179T: Foot switch
Reticle See page I-21

MF-U Motorized

SERIES 176 — Motorized-Type Universal Measuring Microscopes

- Motorized model of the MF-U Series. The X-, Y- and Z-axes are motorized, and the stage can be operated using a remote box.
- Using the optional vision unit enables the image AF function.
- Illumination unit (reflected/transmitted) can be selected from a high-intensity LED or halogen bulb (required).
- Variable aperture diaphragm (reflected/transmitted) allows observation measurement while suppressing light diffraction.
- A wide variety of optional accessories are offered.
- Proven high-NA objectives from the FS optical system (long working distance type).
- Integration of metallurgical and measurement microscope functions provide high-resolution observation and a high-accuracy measurement solution.
- High-magnification observation up to 4000X.
- MF-UE/UF is capable of performing Laser AF. The standard Laser AF function is equipped with the tracking function which maintains focus while the stage is in motion.



MF-UE2017D
- The turret, objectives and illumination unit are sold separately.

MF-U Selection of Machine Type

↓	2017	3017	4020	Counter	Motorized stage	Optics	LAF	Vision Unit
E	176-790A	176-791A	176-792A	X,Y,Z	X, Y, Z	BF	✓	✓
F	176-793A	176-794A	176-795A	X,Y,Z	X, Y, Z	BF/DF	✓	✓
G	176-784A	176-785A	176-786A	X,Y,Z	X, Y, Z	BF	-	✓
H	176-787A	176-788A	176-789A	X,Y,Z	X, Y, Z	BF/DF	-	✓
J	176-894A	176-895A	176-896A	X,Y,Z	Z only	BF	-	✓
K	176-897A	176-898A	176-899A	X,Y,Z	Z only	BF/DF	-	✓

Example: MF-UE2017D results in part number 176-790A

SPECIFICATIONS

BF (Bright field)	Model No.	MF-UG2017D	MF-UG3017D	MF-UG4020D	MF-UE2017D	MF-UE3017D	MF-UE4020D
	Order No.	176-784A	176-785A	176-786A	176-790A	176-791A	176-792A
BD (Bright / Dark field)	Model No.	MF-UH2017D	MF-UH3017D	MF-UH4020D	MF-UF2017D	MF-UF3017D	MF-UF4020D
	Order No.	176-787A	176-788A	176-789A	176-793A	176-794A	176-795A
Observation image		BF (Bright field), DF (Dark field) (MF-UC and MF-UD models only), Polarization, Differential Interference Contrast (DIC) / Erect image					
Eyepiece	Diopter adjustment	10X (standard accessory) (Field number: 24), 15X, 20X					
Objective lens (optional)	BF (Bright field)	M Plan Apo, M Plan Apo HR, M Plan Apo SL, G Plan Apo					
	BD (Bright / Dark field)	BD Plan Apo, D Plan Apo HR, BD plan Apo SL					
Illumination unit (One of the two options must be selected.)	LED illumination unit	Transmitted illumination: Telecentric system, Built-in aperture diaphragm, White LED light source, stepless light intensity control, with cooling fan Reflected illumination: Koehler illumination, Variable aperture diaphragm mechanism, White LED light source, Non-step light intensity control Control unit: Power ON/OFF switch (main switch), 100 - 240V AC power input connector					
	Halogen illumination unit	Transmitted illumination: Telecentric system, Built-in aperture diaphragm, Halogen bulb (12V, 50W), stepless light intensity control, with cooling fan Reflected: BF/BD Kohler illumination with adjustable aperture diaphragm, 12V100W or 12V15W halogen lamp (selectable), external fiber illumination, stepless brightness adjustment Control unit: Power ON/OFF switch (main switch), 100 - 240V AC power input connector					
Vision AF *1		✓			✓		
Laser AF *1		—			✓		
XY-axis	Measuring range	8×6.7" / 200×170mm	12×6.7" / 300×170mm	16×8" / 400×200mm	8×6.7" / 200×170mm	12×6.7" / 300×170mm	16×8" / 400×200mm
Z-axis	Measuring range	8.7" / 220mm					
Measuring accuracy	(When no load is put on the X- or Y-axis)	(2.2+0.02L) μm L: Measuring length (mm)					
Digital counter	Resolution	1/0.5/0.1μm .0001"/.00005"/.00001" switchable					

*1: Vision unit and an image AF cable are separately required.
*2: Measuring method complies with JIS B7153.

Bulb replacement for transmitted illumination Standard: Halogen bulb (12V, 50W) (**No.513667**), Bulb life: 1,100 hours
For replacement for reflected illumination (from separate light source) Standard: Halogen bulb (12V, 100W) (**No.517181**),
High-intensity bulb (12V, 100W) (**No.12BAD602**)
*At the time of purchase, a standard bulb and a high-intensity bulb are provided. (Only for the reflected illumination models.)

Accessories for Measuring Microscope

Stage Micrometer

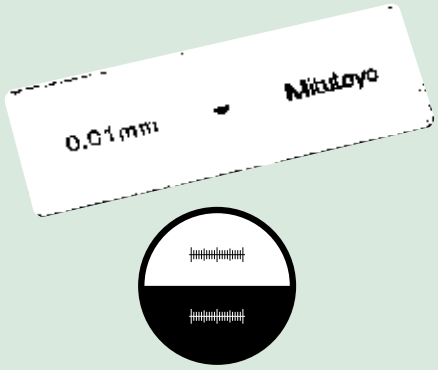

SPECIFICATIONS

Order No.	375-056
Range	1mm
Graduations	0.01mm
Accuracy (at 20˚C)	(1+L)µm, L = Measuring length (mm)
Dimensions (WxD)	3" x 1" / 76 x 26mm
Mass	16g

Optional Reticles

12AAG838 (12AAG878): Cross-hair (7µm width)
12AAG836 (12AAG877)*: Cross-hair (5µm width)
12AAG873 (12AAG876): Cross-hair (3µm width)
12AAG839 (12AAG879): Cross-hair and 45˚ angle
12AAG840 (12AAG880): Broken cross-hair and 60˚ angle
12AAG841 (12AAG881): Zeiss type chart
12AAG842: 20mm scale (0.1mm reading)
12AAG843: Concentric circle (ø1.2 - ø18mm)
12AAG844: 10mm scale (0.1mm reading)
12AAG845: 5mm scale (0.05mm reading)
12AAG846: 10x10mm section (1mm min.)
12AAG847: Metric screw thread (P = 0.25-1.0)
12AAG848: Metric screw thread (P = 1.25-2.0)
12AAG849: Involute gear tooth (14.5˚), module = 0.1 - 1.0
12AAG850: Involute gear tooth (20˚), module = 0.1 - 1.0
12AAG851: Unified screw thread (80 - 28TPI)
12AAG852: Unified screw thread (24 - 14TPI)
12AAG853: Unified screw thread (13 - 10TPI)
12AAG854: Concentric circle (ø.01" - ø.2")
( ): for MF-U models,
* Standard accessory

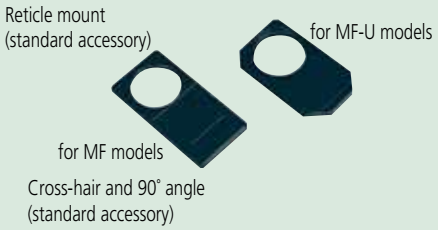

Focus Pilot FP-05

FEATURES

- By installing this system on the camera mount of an MF series measuring microscope and projecting the focusing chart onto the workpiece surface, the focal point can be detected with high accuracy and high repeatability.
- The brightness of the chart can be adjusted.
- A wide view field observation on the monitor is made possible with the use of a CCD camera (C-mount adapter is included.)
- Four types of chart patterns are available. The pattern should be selected in accordance with the type of workpiece surface texture.



Concentric circle



Slit

SPECIFICATIONS

Order No.	375-057A	375-058A	375-067A	375-068A
Applicable microscopes	MF D models		MF-U D models	
Light source	Green LED	Red LED	Green LED	Red LED
Magnification	0.5X, Accuracy: 0.1%**			
Camera adapter	C-mount (provided)			
Applicable CCD camera	Up to 2/3-inch			
Mass	4lbs / 1.8kg			

** Within 2/3 area from the center of view field



Manual and Power Turrets



SPECIFICATIONS

Order No.	176-211	378-018	176-212A	378-016A	378-216A
Observation type	BD	BF	BD	BF	BF
No. of objective mounts	4-mount	4-mount	4-mount	4-mount	5-mount
Driving method	Manual		Motor		
Dimensions (W x D x H)	—	—	Turret: 6.5 x 2.6 x 5.4" 164 x 65 x 137		
			Control Box: 4.1 x 3 x 7.6" 108 x 72 x 193		

Accessories for Measuring Microscope

Twin fiber-optics illuminator



SPECIFICATIONS

Order No.	176-343A
Applicable microscopes	MF, MF-U models
Length of fiber cable	28" / 700mm
Light source	Halogen bulb (12V, 100W) (**517181**: halogen bulb)
Dimensions (W x D x H)	Light unit: 9.3 x 3 x 4.7" 235 x 76 x 120mm

Ring fiber-optics illuminator



SPECIFICATIONS

Order No.	176-366A
Applicable microscopes	MF models (ML 10X or lower)
Length of fiber cable	40" x 1000mm
Light source	Halogen bulb (12V, 100W) (**517181**: halogen bulb)
Dimensions (W x D x H)	Light unit: 9.3 x 3 x 4.7" 235 x 76 x 120mm

LED Ring Illuminator

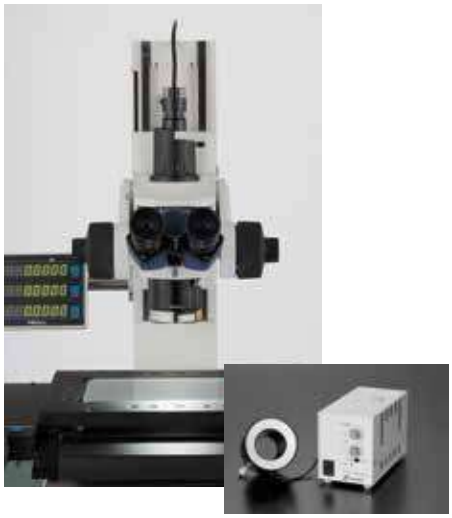

SPECIFICATIONS

Order No.	176-367-2A
Applicable microscopes	MF models with 1X/3X/5X/10X objective
Light source	White LED
Length of LED cable	59" / 1500mm

LED Ring Light (for sliding nosepiece)



SPECIFICATIONS

Order No.	176-371A
Applicable microscopes	MF models with 1X/3X/5X/10X objective
Light source	LED

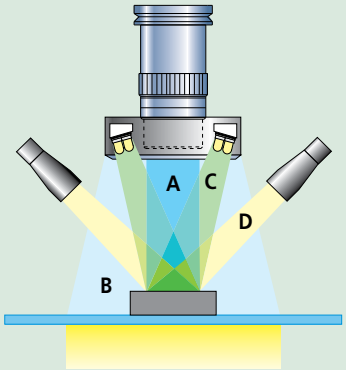

A: Vertical surface illumination (Halogen)


PCB


HDD suspension

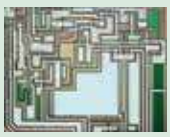
IC circuit

B: Ring fiber optics illumination


Flexible PCB


PCB


Electric parts

C: LED ring illumination


HDD suspension


PCB


Black resin molded parts

D: Twin fiber-optics illumination



IC package


Garnet


PCB

QM-Data200

SERIES 264 — 2-D Data Processing Unit

Technical Data

Resolution:	0.0001mm
Program functions:	Part program creation, execution, editing
Statisical processing:	Number of data, maximum value, minimum value, mean value, standard deviation, range, histogram
Element memory:	Maximum of 1000 elements
Element recall:	Point, line, circle, distance, ellipse, rectangular hole, slotted hole, intersection and intersecting angle
Element key-in:	Point, line, circle
Display system:	Monographic LCD (320 x 240 dots, with back light)
Measurement result file output:	RS-232C/USB output (CSV format, MUX-10F format)
Display language:	Japanese/English/German/French/ Italian/Spanish/Portuguese/Swedish/ Polish/Dutch/Hungarian
Data input:	RS-232C/USB, X/Y/Z-axis signal, Footswitch
Data output:	RS-232C/USB
Power supply	120V AC, 50/60Hz
Mass	2.2kg (stand-mount type) 2.1kg (arm-mount type)

QM-Data200
Order No.: 264-155A (stand-mount type)
Order No.: 264-156A (arm-mount type)

The QM-Data200 is a geometric readout/ analysis unit for optical instruments like profile projectors. This features powerful 2-D coordinate measurement capabilities with unmatched simple key operation. The QM-Data200 improves operator productivity, minimizes errors, and saves measurement time and production cost.

FEATURES

- Various graphic displays on the large colored LCD screen for easy measurement operations.
- One-key operation for combined measurements that are often used (circle-circle distance, etc.)
- The AI measurement function (automatic identification of measuring item) eliminates switching between the measurement command keys.
- Equipped with the measurement procedure teaching function and the measuring position navigation in Repeat mode.
- The user menu function allows user to register measurement commands or part programs to create his own menu.
- Tolerance zone measurement of data processing result and various statistical processing for each item is available.
- Measurement result output to "MS-Excel" in spreadsheet (CSV) format.
- The measurement procedure and measurement result can be saved, using a USB drive.
- Two models available: a stand-alone type with tilt system and a flexible-arm type that can be mounted on a profile projector.



QM-Data 200
Stand-mount type

• Intuitive panel design
The QM-Data200 employs Geometry Keys to accelerate the measurement process. The probing routine of standard geometric features and combinations are designed with Geometry Keys on the front panel. Click the key you need and capture features to complete the measurement quickly and accurately. This improves operator productivity, reduce errors, and saves operation time and cost.

• Graphic display
Measurement information and data are visualized on the back-lit colored LCD with graphical interfaces. The geometric feature selected is displayed with the probing navigator. The measurements map and blink indication show the probing points and sequences. This improves operation accuracy and reduces errors and time.





QM-Data200

SERIES 264 — 2-D Data Processing Unit

SYSTEM DIAGRAM

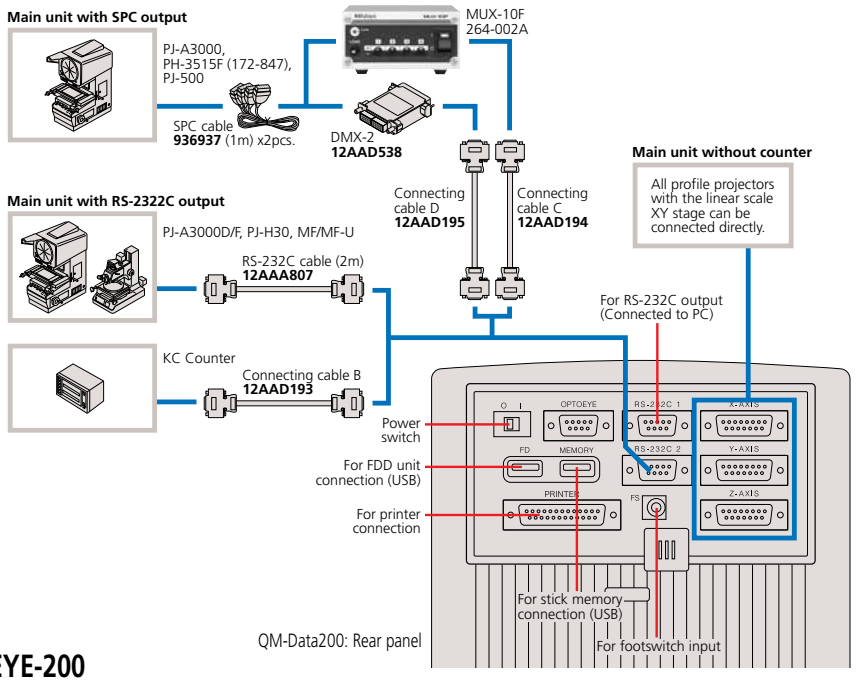

OPTOEYE-200

The OPTOEYE-200 Image Edge Sensor eliminates human errors, ensuring speedy, accurate and consistent measurements, regardless of operator's skill.

FEATURES

- OPTOEYE-200 adopts a thin fiber-optic cable for detector connection for easy set-up and smart operation without obstructing your view.
- Bright and dark buttons allow easy calibration.
- OPTOEYE can be powered by QM-Data200 via the connecting cable. No AC adapter is required.
- The brightness of the chart can be adjusted.



DIMENSIONS

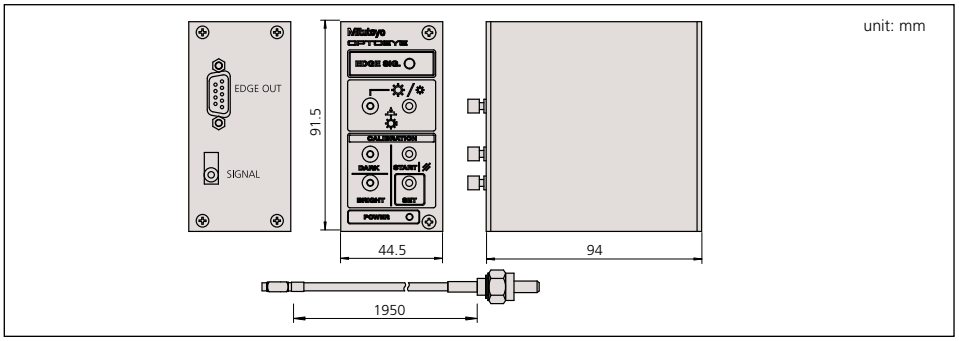

Optional Accessories

12AAD034: Receipt printer (for 120V)
223663: Printer paper for receipt printer
12AAA804: Printer cable (2m)
937179T: Foot switch
12AAD193: Connection cable B
12AAD194: Connection cable C
12AAD195: Connection cable D
12AAA807: RS-232C cable (2m)
12AAA808: RS-232C cable (4m)

Technical Data

Image detection
- Directivity: Non-direction
- Min. diameter: ø2mm on the screen
- Min. width: 1mm on the screen
- Max. moving speed: 1000mm/s

Applicable illumination
- Type: Surface / Contour illumination
- Range: 30Lx to 1500Lx on the screen
  Bright-Dark field difference: 20Lx

Repeatability: 1µm in contour illumination
Function: Error in detection of illumination change
Supporting a contour illumination
brightness selector switch of projector

Optional Accessories

12AAE671:
Detector attachment (A)
PJ-A3000, PJ-H30, PH-3515, PH-A14 series
(Adaptation diameter of a screen:
10" / ø250 to 14" / ø350mm)

12AAE672:
Detector attachment (B)
PJ-500, PV-5110, PV-600A series
(Adaptation diameter of a screen:
20" / ø500 to 24" / ø600mm)



Vision Unit

SERIES 359 — Vision System Retrofit for Microscopes

SPECIFICATIONS

Projected Image	Inverted Image
Onscreen Magnification	19x-1900x (22" Monitor)
Camera Unit	
Image Sensor Size	1/2" Color CMMOS
Image Sensor Resolution	3 MP
Interface	USB 2.0
Dimensions (WxDxH)	2.28 x 2.32 x 3.27" 58 x 59 x 83mm
Adapter Unit	
Measurement Software	QSPak VUE (optional)
Dimensions (DXH)	1.77 x 4.84" / 45 x 123mm
Magnification	0.5x
Optional Accessory:	Foot Switch **(12AAJ088)**

QSPAK, optional software

For observation/comparison of form

- Template matching function
- Manual pattern matching function

For simple measurement

- One-click edge detection tool function
- Smart tool function
- User macro function

For repeated measurement/ auto-measurement

- Quick navigation function
- Playback function
- Graphic function
- External data output function
- Statistical calculation function

One-click Edge Detection

By clicking the mouse near the edge of a workpiece, QSPAK automatically scans the edge and detects it, showing its coordinates. This function also works with the point tool, box tool, circle tool and auto-focus tool.

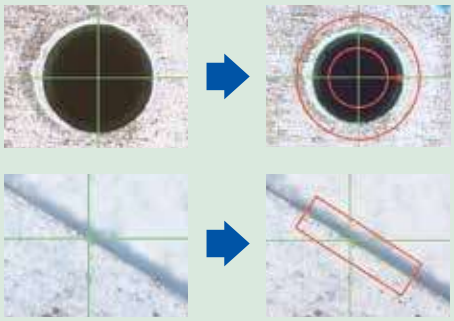

Graphic Window

The measurement results and measured elements are plotted in the graphic window in real-time. By using this function, the user can check the current measuring position at a glance. The graphic window can be used for geometrical calculation.

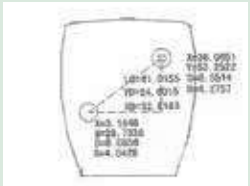

FEATURES

- The automatic edge-detection tools and various macro icons allow measurement in one easy step.
- The graphics and measurement navigation functions facilitate operation.
- Image data input/storage function.
- Measurement results are output in CVS format. This lets the user generate an inspection table in MS-Excel®.
- Allows the tolerance zone measurement of measurement results and various types of statistical processing for each item.
- Combined use with the focus pilot provides high-accuracy height measurements. (Patent pending)
- A series of measuring operations can be performed using just one screen display.
- The auto-brightness control function reproduces the type and degree of illumination required. (This function is limited to the MF/MF-U series.)

QSPAK Measurement Window



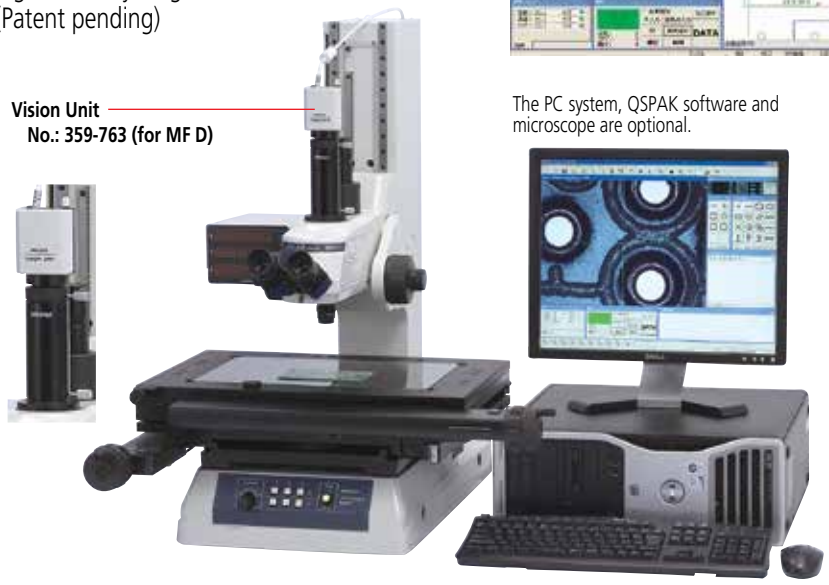

The PC system, QSPAK software and microscope are optional.

: Optional accessory

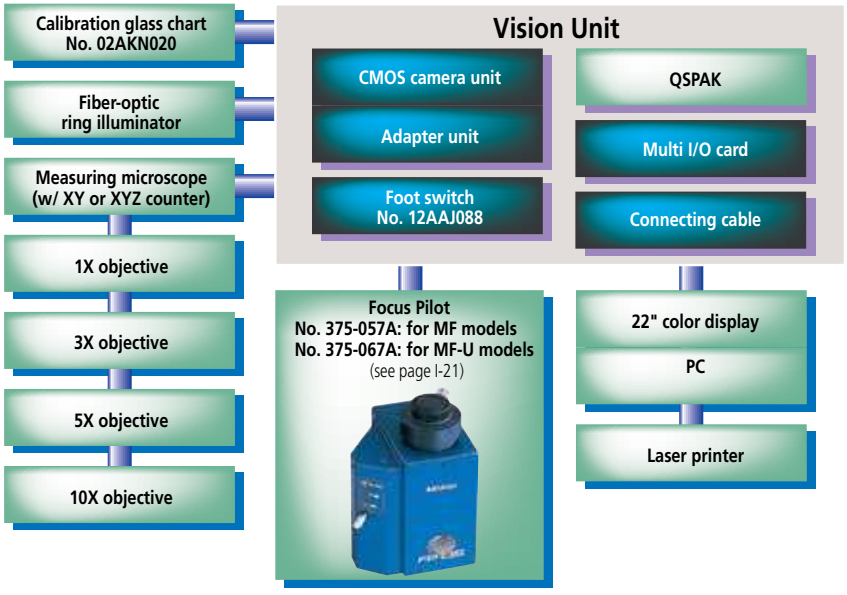

Mitutoyo

FS-70

SERIES 378 — Microscope Unit for Semiconductor Inspection

FEATURES

- The optical system that was developed for the best-selling FS 60 models was further enhanced for the FS70 models. It is ideal as a microscope unit of a prober station for semiconductors. (All models CE marked.)
- The FS70L supports three types of YAG laser wavelength ranges (1064nm, 532nm and 355nm), while the FS70L4 supports two types of wavelength ranges (532nm and 266nm), thus expanding a scope of laser applications, allowing laser-cutting of thin-films used in semiconductors and liquid crystal substrates. However, Mitutoyo assumes no responsibility for the performance and/or safety of the laser system used with Mitutoyo microscopes. Careful examination is recommended in selecting a laser-emission unit.
- Bright field, differential interference contrast (DIC) and polarized observations are optional with FS70Z and FS70. The FS70L and FS70L4 do not support the DIC method.
- By employing an inward revolver, the long working distance objectives provide excellent operability.
- An ergonomic design with superb operability: the FS70 employs the erect-image optical system (the image in the field of view has the same orientation as the specimen) and enlarged fine focus adjustment wheel with rubber-grip coarse adjustment knob.



FS70Z



FS70L



FS70L4

SPECIFICATIONS

Model No. **Order No.**	FS70 **378-184-1**	FS70-TH **378-184-3**	FS70Z **378-185-1**	FS70Z-TH **378-185-3**	FS70L **378-186-1**	FS70L-TH **378-186-3**	FS70L4 **378-187-1**	FS70L4-TH **378-187-3**

Short base model No. **Order No.**	FS70-S **378-184-2**	FS70-THS **378-184-4**	FS70Z-S **378-185-2**	FS70Z-THS **378-185-4**	FS70L-S **378-186-2**	FS70L-THS **378-186-4**	FS70L4-S **378-187-2**	FS70L4-THS **378-187-4**
Focus adjustment	50mm travel range with concentric coarse (3.8mm/rev) and fine (0.1mm/rev) focusing wheels (right / left)							
Image	Erect image							
Pupil distance	Siedentopf type, adjustment range: 2 - 3" / 51 - 76mm							
Field number	24							
Tilt angle	—	0° - 20°	—	0° - 20°	—	0° - 20°	—	0° - 20°
Optical pass ratio	50/50	100/0 or 0/100	50/50	100/0 or 0/100	100/0 or 0/100		100/0 or 0/100	
Protective filter	—		—		Built-in laser beam filter		Built-in laser beam filter	
Tube lens	1X		1X - 2X zoom		1X		1X	
Applicable laser	—		—		1064/532/355nm		532/266nm	
Camera mount	C-mount (using optional adapter B)				Use a laser with TV port.		C-mount receptacle (with green filter switch)	
Illumination system, optional	Reflective illumination for bright field (Koehler illumination, with aperture diaphragm) 12V 100W fiber optics, non-stepped adjustment, light guide length: 1.5m, power consumption 150W							
Objective, optional (for observation)	M Plan Apo, M Plan Apo SL, G Plan Apo							
Objective, optional (for laser-cutting)	—				M/LCD Plan NIR, M/LCD Plan NUV		M Plan UV	
Loading weight*	32lbs/14.5kg	30lbs/13.6kg	31lbs/14.1kg	29lbs/13.2kg	31lbs/14.2kg	30lbs/13.5kg	31lbs/13.9kg	29lbs/13.1kg
Mass (main unit)	13lbs/6.1kg	15.5lbs/7.1kg	14.5lbs/6.6kg	16.5lbs/7.5kg	14lbs/6.4kg	15.5lbs/7.2kg	14.5lbs/6.7kg	16.5lbs/7.5kg

*Loading weight on optical tube excluding weight of objective lenses and eyepieces.

Technical Data

Focus Adjustment Method:	With concentric coarse and fine focusing wheels (right and left)
Range:	50mm travel range 0.1mm/rev. for fine adjustment, 3.8mm/rev. for coarse adjustment
Trinocular tube Image:	Erect image
Pupil distance:	Siedentopf type, adjustment range: 2-3" / 51-76mm
Field number:	24
Tilt angle:	0° - 20° (only -TH, -THS models)
Illumination system:	Reflective illumination for bright field (Koehler illumination, with aperture diaphram)
Light source (optional):	12V100W fiber optics, non-stepped adjustment, light guide length 1.5m, power consumption 150W
Objectives (optional):	M Plan Apo, M Plan Apo SL, G Plan Apo

Optional Accessories

For a complete listing of accessories see Microscope Units and Objectives brochure, E4191-378

VMU

SERIES 378 — Video Microscope Unit

The VMU is a compact, light-weight, and easy-to-install microscope unit for CCD camera monitoring in semiconductor fabrications.

FEATURES

- The rigidity and general performance of the VMU-LB & VMU-L4B have been enhanced compared to previous models.
- The optical system features ultra-long working distance objectives and correction for the wide range of radiation.
- The fiber-optic reflected illumination keeps the workpiece free from thermal expansion caused by heat. The fiber-optic illuminator is required for the light source.
- Also available with a laser mount or revolving nosepiece (objective mount).

SPECIFICATIONS

Magnification of tube		1X
Applicable wavelength	378-505, 378-506	Near-infrared and visible radiation
	378-507 378-513	Near-infrared —visible— near-ultraviolet radiation
	378-508	Visible and ultraviolet radiation
	378-514	Near-infrared to ultraviolet
Objective		(Optional) see pg. I-28 thru I-32
Reflected illumination		• Telecentric system with aperture stop system. • Fiber-optic illuminator (optional) is required.
Light source		Halogen bulb (21V, 150W) (optional)
Mass		**378-505**: 570g **378-506**: 590g **378-507**: 980g **378-508**: 1010g **378-513**: 1300g **378-514**: 1300g

Selection Guide of System Configuration

Order No. (Depends on each system configuration)	VMU-V **378-505**	VMU-H **378-506**	VMU-L **378-507**	VMU-L4 **378-508**	VMU-LB **378-513**	VMU-L4B **378-514**
Vertical CCD camera mount	●		●	●	●	●
Horizontal CCD camera mount		●				
YAG laser mount			●	●	●	●
Fiber-optic illumination unit			▲	▲	▲	▲
M Plan Apo, M Plan Apo SL, G Plan Apo objectives for bright field observation	▲	▲	▲	▲	▲	▲
M Plan Apo NIR, LCD Plan Apo NIR, M Plan Apo NUV and LCD Plan Apo NUV objectives for laser cutting			▲		▲	▲
M Plan UV objectives for laser machining				▲		▲

●: Provided, ▲: Available as optional accessory

Wide VMU:

FEATURES

- Offers approximately 7 times larger inspection area.
- Increases throughput by allowing for batch measurements.
- BD models can accommodate darkfield optics.

378-515 WIDE VMU-V
378-516 WIDE VMU-H
378-517 WIDE VMU-BDV
378-518 WIDE VMU-BDH

Technical Data

FOV in Camera Port	30mm Diameter
Camera Mount	F Mount (with C mount Adapter)
Example Sensor Size	APS-C format (2 inches)

Wide VMU Accessories

378-724	BF Revolver
378-725	BD Revolver
378-726	BF Motorized Revolver
378-727	BD Motorized Revolver



WIDE VMU-V WIDE VMU-H

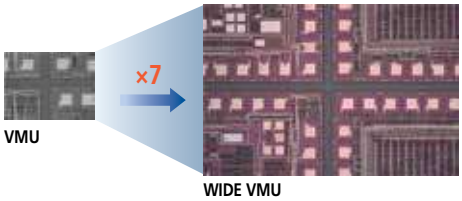

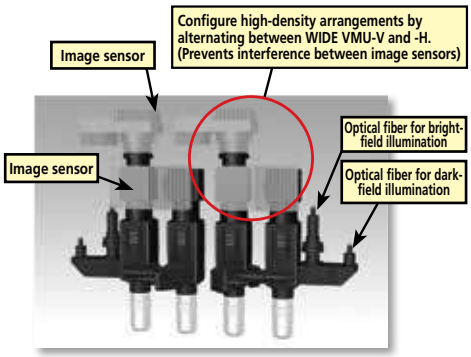





Mitutoyo

Eyepieces
SERIES 378

FEATURES
- The field of view is extra wide.
- Optional reticles are available.


378-866


378-857


378-858

SPECIFICATIONS

Order No. (2pcs. set)	Magnification	Field number	Mass	Individual order No.
378-866	10X	24	85g	**378-856-5**
378-857	15X	16	40g	**378-857-5**
378-858	20X	12	55g	

Reticles (optional)
516848: Cross-hair
516576: Broken cross hair (90° and 60°)
516578: Concentric circle (Diametric increment: 1.2mm)
516577: 20mm scale (Minimum reading: 0.1mm) with cross hair
516849: 10mm scale (Minimum reading: 0.1mm)
516850: 5mm scale (Minimum reading: 0.05mm)

Objectives
SERIES 378

The Mitutoyo 378 Series objectives have the world's longest working distance and an infinity correction optical system. These objectives provide flexible observation at high magnifications and independent correction of chromatic aberration.

FEATURES
- The long working distance objectives provide excellent clearance between the lens surface and the workpiece surface in focus, making it possible to observe workpieces which are usually hard-to-focus because of awkward projections.
- The metallurgical plan apochromatic (M Plan Apo) objective provides a flat, chromatic aberration-free image throughout the field of view, making it suitable for any type of microscope.
- Specially designed objectives also are available with correction for near-infrared radiation, near-ultraviolet radiation, and ultraviolet radiation, or various thicknesses of LCD screen glasses.
- The mounting screw threads of objectives are designed to conform to JIS B-7141-1988.


M Plan Apo and M Plan Apo SL objectives for bright field observation


BD Plan Apo and BD Plan Apo SL objectives for bright/dark field observation


Near-infrared radiation corrected M Plan Apo NIR objectives


Near-ultraviolet radiation corrected M Plan Apo NUV objectives


Ultraviolet radiation corrected M Plan UV objectives



M Plan Apo for Bright Field Observation

Order No.	Mag.	N.A.	W.D.	f	R	D.F.	View field 1	View field 2	Mass
378-800-3	1X	0.025	11.0mm	200mm	11.0μm	440μm	ø24mm	4.8x6.4mm	300g
378-801-6	2X	0.055	34.0mm	100mm	5.0μm	91μm	ø12mm	2.4x3.2mm	220g
378-802-6	5X	0.14	34.0mm	40mm	2.0μm	14.0μm	ø4.8mm	0.96x1.28mm	230g
378-807-3	7.5X	0.21	35.0mm	26.67mm	1.3μm	6.2μm	ø3.6mm	0.64x0.85mm	240g
378-803-3	10X	0.28	34.0mm	20mm	1.0μm	3.5μm	ø2.4mm	0.48x0.64mm	240g
378-804-3	20X	0.42	20.0mm	10mm	0.7μm	1.6μm	ø1.2mm	0.24x0.32mm	270g
378-805-3	50X	0.55	13.0mm	4mm	0.5μm	0.9μm	ø0.48mm	0.10x0.13mm	290g
378-806-3	100X	0.70	6.0mm	2mm	0.4μm	0.6μm	ø0.24mm	0.05x0.06mm	320g

DIMENSIONS

Unit: mm

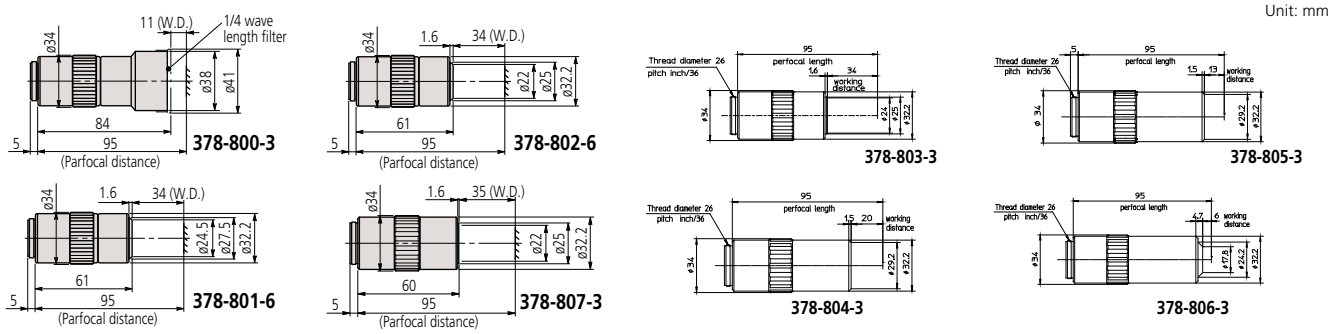

Note:
These objectives offer extra-long working distance.

M Plan Apo SL for Bright Field Observation

Order No.	Mag.	N.A.	W.D.	f	R	D.F.	View field 1	View field 2	Mass
378-810-3	20X	0.28	30.5mm	10mm	1.0μm	3.5μm	ø1.2mm	0.24x0.32mm	240g
378-811-3	50X	0.42	20.5mm	4mm	0.7μm	1.6μm	ø0.48mm	0.10x0.13mm	280g
378-812-3	80X	0.50	15.0mm	2.5mm	0.6μm	1.1μm	ø0.3mm	0.06x0.08mm	280g
378-813-3	100X	0.55	13.0mm	2mm	0.5μm	0.9μm	ø0.24mm	0.05x0.06mm	290g
378-816-3	200X	0.62	13.0mm	1mm	0.4μm	0.7μm	ø0.12mm	0.025x0.03mm	490g

DIMENSIONS

Unit: mm

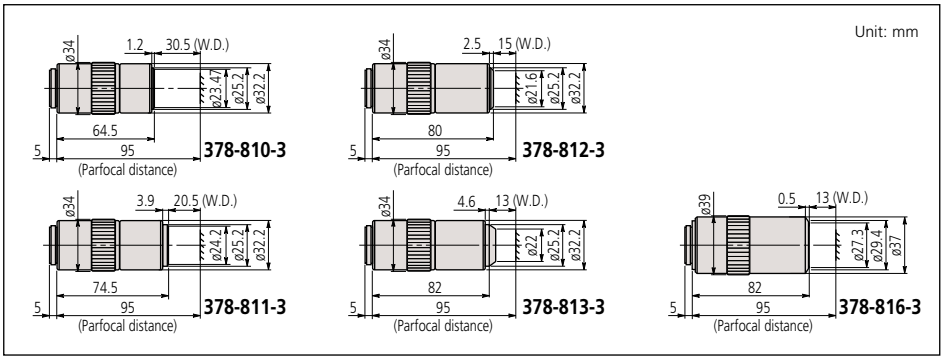



Note:
These objectives offer extra-high resolving power.

M Plan Apo HR for Bright Field Observation

Order No.	Mag.	N.A.	W.D.	f	R	D.F.	View field 1	View field 2	Mass
378-787-4	5X	0.21	25.5mm	40mm	1.3μm	6.2μm	ø4.8mm	0.96x1.28mm	285g
378-788-4	10X	0.42	15mm	20mm	0.7μm	1.6μm	ø2.4mm	0.48x0.64mm	460g
378-814-4	50X	0.75	5.2mm	4mm	0.4μm	0.49μm	ø0.48mm	0.10x0.13mm	400g
378-815-4	100X	0.90	1.3mm	2mm	0.3μm	0.34μm	ø0.24mm	0.05x0.06mm	410g

DIMENSIONS

Unit: mm

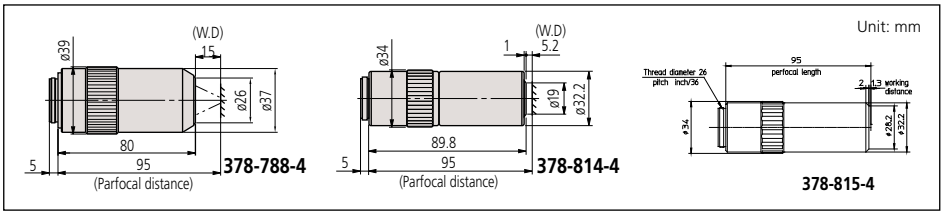

Mag.: Magnification
N.A.: Numerical aperture
W.D.: Working distance
f: Focal distance
R: Resolving power
D.F.: Focal depth
View field 1:
Field of view when using ø24mm eyepiece
View field 2:
Field of view when using 1/2" CCD camera

Mitutoyo

Glass Thickness (t = 3.5mm) Corrected
G Plan Apo for Bright Field Observation

Order No.	Mag.	N.A.	W.D.	f	R	D.F.	View field 1	View field 2	Mass
378-847	20X	0.28	29.42mm*	10mm	1.0μm	3.5μm	ø1.2mm	0.24x0.32mm	270g
378-848-3	50X	0.50	13.89mm*	4mm	0.6μm	1.1μm	ø0.48mm	0.10x0.13mm	320g

*In air

DIMENSIONS

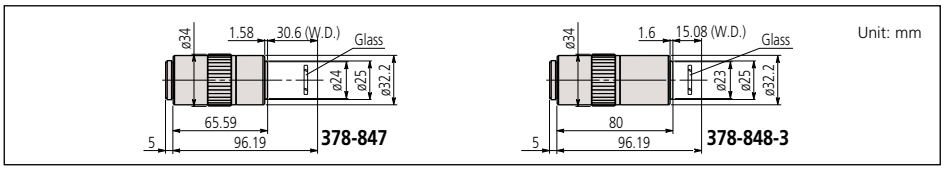



Note:
The G Plan Apo Series are designed for observing a workpiece through BK-7 glass (thickness = 3.5mm).

BD Plan Apo for Bright/Dark Field Observation

Order No.	Mag.	N.A.	W.D.	f	R	D.F.	View field 1	View field 2	Mass
378-831-7	2X	0.055	34.0mm	100mm	5.0μm	91μm	ø12mm	2.4x3.2mm	340g
378-832-7	5X	0.14	34.0mm	40mm	2.0μm	14.0μm	ø4.8mm	0.96x1.28mm	350g
378-830-7	7.5X	0.21	34.0mm	26.67mm	1.3μm	6.2μm	ø3.6mm	0.64x0.85mm	350g
378-833-7	10X	0.28	34.0mm	20mm	1.0μm	3.5μm	ø2.4mm	0.48x0.64mm	350g
378-834-7	20X	0.42	20.0mm	10mm	0.7μm	1.6μm	ø1.2mm	0.24x0.32mm	400g
378-835-7	50X	0.55	13.0mm	4mm	0.5μm	0.9μm	ø0.48mm	0.10x0.13mm	440g
378-836-7	100X	0.70	6.0mm	2mm	0.4μm	0.6μm	ø0.24mm	0.05x0.06mm	460g

DIMENSIONS

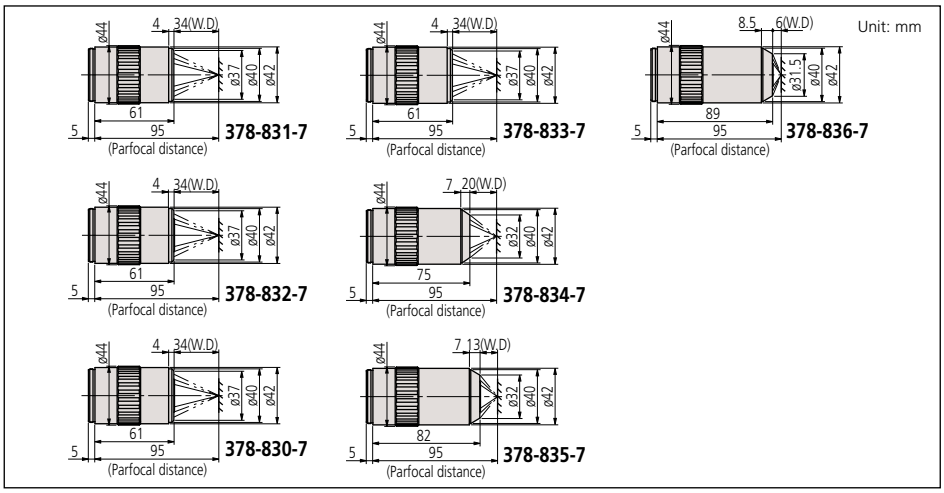



BD Plan Apo SL for Bright/Dark Field Observation

Order No.	Mag.	N.A.	W.D.	f	R	D.F.	View field 1	View field 2	Mass
378-840-7	20X	0.28	30.5mm	10mm	1.0μm	3.5μm	ø1.2mm	0.24x0.32mm	350g
378-841-7	50X	0.42	20.0mm	4mm	0.7μm	1.6μm	ø0.48mm	0.10x0.13mm	410g
378-842-7	80X	0.50	13.0mm	2.5mm	0.6μm	1.1μm	ø0.3mm	0.06x0.08mm	430g
378-843-7	100X	0.55	13.0mm	2mm	0.5μm	0.9μm	ø0.24mm	0.05x0.06mm	440g

DIMENSIONS

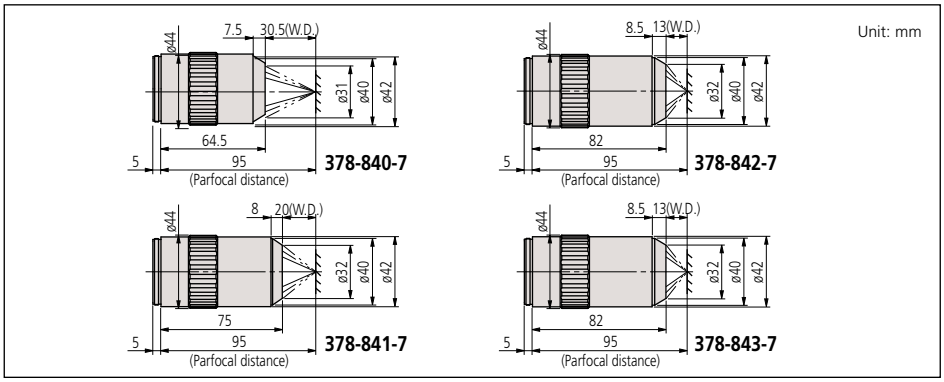



Note:
These objectives offer extra-long working distance.

Mag.: Magnification
N.A.: Numerical aperture
W.D.: Working distance
f: Focal distance
R: Resolving power
D.F.: Focal depth
View field 1: Field of view when using ø24mm eyepiece
View field 2: Field of view when using 1/2" CCD camera

Note:
These objectives offer extra-high resolving power.

BD Plan Apo HR for Bright/Dark Field Observation

Order No.	Mag.	N.A.	W.D.	f	R	D.F.	View field 1	View field 2	Mass
378-845-7	50X	0.75	5.2mm	4mm	0.4μm	0.49μm	ø0.48mm	0.10x0.13mm	530g
378-846-7	100X	0.90	1.3mm	2mm	0.3μm	0.34μm	ø0.24mm	0.05x0.06mm	545g

DIMENSIONS

Unit: mm

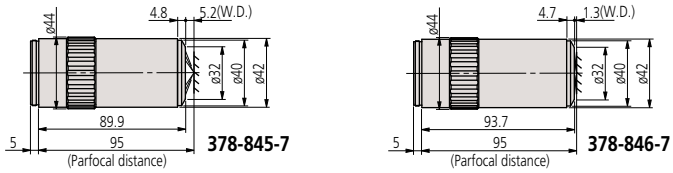



Note:
These objectives are designed so that a workpiece's image can be focused within the focal depth even when the wavelength is changed anywhere from the visible range (l = 480nm) up to near-infrared range (l = 1800nm). Therefore, the M Plan NIR Series are suitable for laser repair. However, when the wavelength used exceeds 1100nm, the focusing position may slightly deviate from that in the visible range due to changes in glass dispersion and refractive index.

Near-infrared Radiation Corrected M Plan Apo NIR for Bright Field Observation

Order No.	Mag.	N.A.	W.D.	f	R	D.F.	View field 1	View field 2	Mass
378-822-5	5X	0.14	37.5mm	40mm	2.0μm	14.0μm	ø4.8mm	0.96x1.28mm	220g
378-823-5	10X	0.26	30.5mm	20mm	1.1μm	4.1μm	ø2.4mm	0.48x0.64mm	250g
378-824-5	20X	0.40	20.0mm	10mm	0.7μm	1.7μm	ø1.2mm	0.24x0.32mm	300g
378-825-5	50X	0.42	17.0mm	4mm	0.7μm	1.6μm	ø0.48mm	0.10x0.13mm	315g
378-826-5	100X	0.50	12.0mm	2mm	0.6μm	1.1μm	ø0.24mm	0.05x0.06mm	335g
378-863-5*	50X	0.65	10mm	4mm	0.4μm	0.7μm	ø0.48mm	0.10x0.13mm	450g
378-864-5*	100X	0.70	10mm	2mm	0.4μm	0.6μm	ø0.24mm	0.05x0.06mm	450g

* High Resolution (HR objectives)

DIMENSIONS

Unit: mm

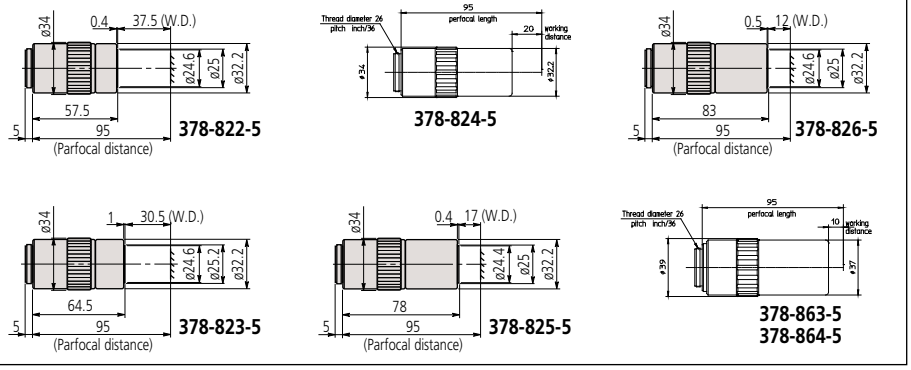



Note:
These objectives are designed so that a workpiece's image can be focused within the focal depth even when the wavelength is changed anywhere from the visible range (l = 620nm) to the near-ultraviolet range (l = 355nm). Therefore The M Plan NUV Series are suitable for laser repair using a high frequency laser beam.

Near-ultraviolet Radiation Corrected M Plan Apo NUV for Bright Field Observation

Order No.	Mag.	N.A.	W.D.	f	R	D.F.	View field 1	View field 2	Mass
378-809-5	10X	0.28	30.5mm	20mm	1μm	3.5μm	ø2.4mm	0.48x0.64mm	255g
378-817-6	20X	0.40	17.0mm	10mm	0.7μm	1.7μm	ø1.2mm	0.24x0.32mm	340g
378-818-4	50X	0.42	15.0mm	4mm	0.7μm	1.6μm	ø0.48mm	0.10x0.13mm	350g
378-819-4	100X	0.50	11.0mm	2mm	0.6μm	1.1μm	ø0.24mm	0.05x0.06mm	380g
378-888-6*	50X	0.65	10.00mm	4mm	0.42μm	0.65μm	ø0.48mm	0.10x0.13mm	500g

*High resolution (HR objective)

DIMENSIONS

Unit: mm

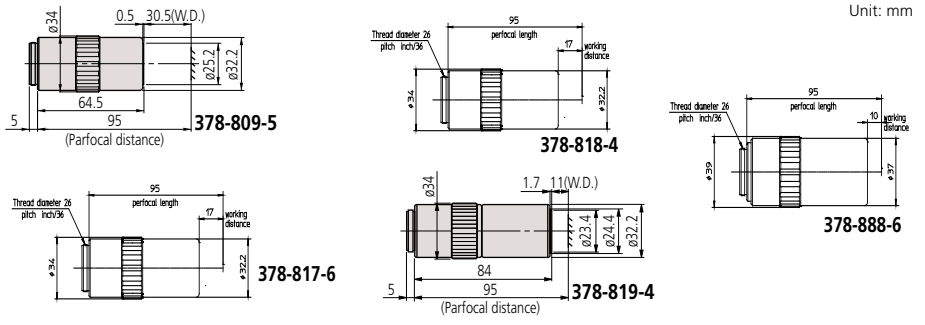

Mag.: Magnification
N.A.: Numerical aperture
W.D.: Working distance
f: Focal distance
R: Resolving power
D.F.: Focal depth
View field 1: Field of view when using ø24mm eyepiece
View field 2: Field of view when using 1/2" CCD camera

Near-Infrared Radiation and LCD Glass Thickness (t = 1.1mm or 0.7mm) Corrected LCD Plan Apo NIR for Bright Field Observation

Order No.	Mag.	N.A.	W.D.	f	R	D.F.	View field 1	View field 2	Mass
378-827-5	20X (t1.1)	0.40	19.98mm*	10mm	0.7µm	1.7µm	ø1.2mm	0.24x0.32mm	305g
378-828-5	50X (t1.1)	0.42	17.13mm*	3.9mm	0.7µm	1.6µm	ø0.48mm	0.10x0.13mm	320g
378-829-5	50X (t0.7)	0.42	17.26mm*	3.9mm	0.7µm	1.6µm	ø0.48mm	0.10x0.13mm	320g
378-752-5	100X (t1.1)	0.50	12.13mm*	2mm	0.6µm	1.1µm	ø0.24mm	0.05x0.06mm	335g
378-754-5	100X (t0.7)	0.50	11.76mm*	2mm	0.6µm	1.1µm	ø0.24mm	0.05x0.06mm	335g

*In air



Note:
These near-infrared (l = 1800nm) corrected objectives are designed for observing a workpiece through LCD glass (thickness = 1.1mm (**378-827-5**, **378-828-5, 378-752-5**) or 0.7mm (**378-829-5**, **378-754-5**) and for laser repair.

DIMENSIONS

Unit: mm

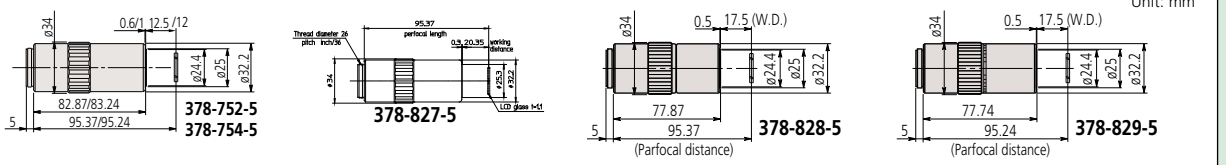

Near-ultraviolet Radiation and LCD Glass Thickness (t = 0.7mm) Corrected LCD Plan Apo NUV for Bright Field Observation

Order No.	Mag.	N.A.	W.D.	f	R	D.F.	View field 1	View field 2	Mass
378-890-6	20X (t0.7)	0.4	16.96mm*	10mm	0.7µm	1.7µm	ø1.2mm	0.24x0.32mm	340g
378-891-6**	50X (t0.7)	0.65	9.76mm*	4mm	0.42µm	0.65µm	ø0.48mm	0.10x0.13mm	500g
378-820-6	50X (t0.7)	0.42	14.76mm*	4mm	0.7µm	1.6µm	ø0.48mm	0.10x0.13mm	310g
378-753-6	50X (t1.1)	0.42	14.53mm	4mm	0.7µm	1.6µm	ø0.48mm	0.10x0.13mm	310g
378-751-4	100X(t1.1)	0.50	11.03mm	2mm	0.6µm	1.1µm	ø0.24mm	0.05x0.06mm	380g

* In air
** High-Resolution (HR Objectives)



Note:
These near ultraviolet corrected objectives are designed for observing a workpiece through LCD glass (thickness = 1.1mm (**378-753-6, 378-751-4**) or 0.7mm (**378-820-6**) and for laser repair.

DIMENSIONS

Unit: mm

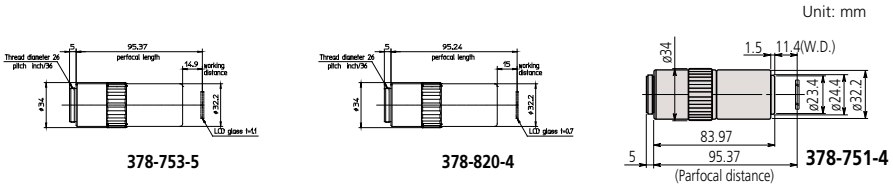

Ultraviolet Radiation Corrected M Plan UV for Bright Field Observation

Order No.	Mag.	N.A.	W.D.	f	R	D.F.	View field 1	View field 2	Mass
378-844-15	10X	0.25	20mm	20mm	1.1µm	4.4µm	ø2.4mm	0.48x0.64mm	310g
378-837-7	20X	0.36	15.0mm	10mm	0.8µm	2.1µm	ø1.2mm	0.24x0.32mm	330g
378-838-8	50X	0.41	12.0mm	4mm	0.7µm	1.7µm	ø0.48mm	0.10x0.13mm	400g
378-839-5	80X	0.55	10.0mm	2.5mm	0.5µm	0.9µm	ø0.3mm	0.06x0.08mm	380g

DIMENSIONS

Unit: mm

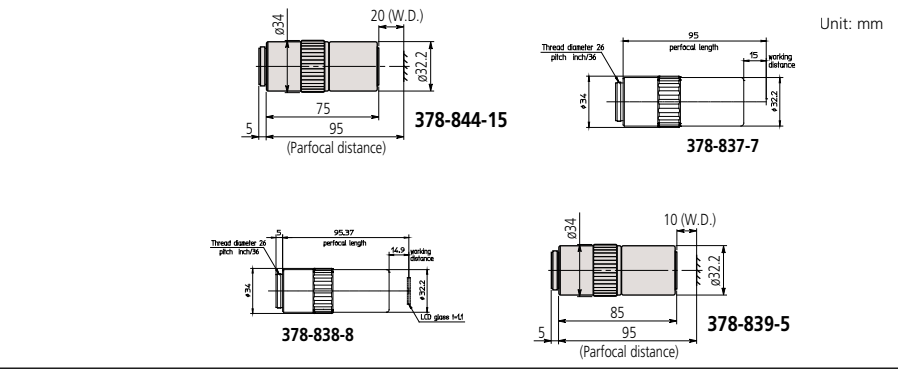



Note:
These ultraviolet corrected objectives are designed so that a workpiece's image can be focused within the focal depth even when the wavelength is changed anywhere from the visible range (l = 550nm) to the ultraviolet range (l = 266nm). Therefore the M Plan UV Series are suitable for laser repair using a high-frequency laser beam.

Mag.: Magnification
N.A.: Numerical aperture
W.D.: Working distance
f: Focal distance
R: Resolving power
D.F.: Focal depth
View field 1: Field of view when using ø24mm eyepiece
View field 2: Field of view when using 1/2" CCD camera

MSM-400

SERIES 377 — Stereo Microscopes

Digital Imaging with Software

Order No.	Description
64AAB429	MOTICAM 2, 2.0 MEGAPIXEL-1/3" CMOS, USB
64AAB529	MOTICAM 3+, 3.0 MEGAPIXEL-1/2" CMOS, USB
64AAB431	MOTICAM 5, 5.0 MEGAPIXEL-1/2.5" CMOS, USB
64AAB526	MOTICAM 1080, 2.0 MEGAPIXEL-1/2.8" CMOS, USB/HDMI



Optional Accessories

Order No.	Description
64AAB214	LED Variable Ring Light
64PMI237	MOTICAM EYETUBE ADAPTOR (for TM Scopes)

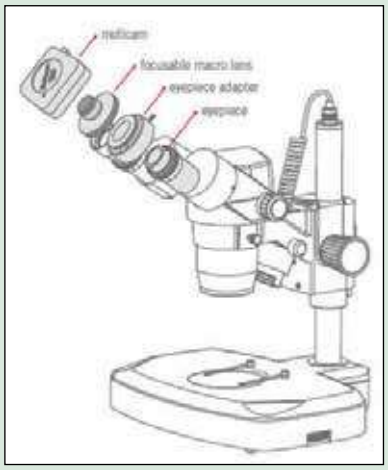


Motic Images Plus 2.0 - Measurements

FEATURES

- Continuous 1X - 4X magnification
- Image always in focus throughout zoom range
- Crisp, erect images with high resolution and excellent stereoscopic effect
- Stereo-tube can be rotated a full 360°, for viewing at any angle
- Bilateral zoom control knob adds convenience and increases operator efficiency
- Diopter adjustment for both eyepieces
- Binocular tube inclination: 45°
- Focusing range: 1.46" (37mm)
- Interpupillary adjustable range: 2.12" - 2.99" (54mm - 76mm)
- Optional zoom ranges from 2.5X - 10X to 30X - 120X

The MSM-414L is a traditional binocular stereo microscope for industrial, medical and classroom applications. It is ideal for electrical small part inspection, assembly, and medical/ biological dissection.

Optional Accessories

Illuminated Stand

Order No.	Description
377-412	Pole-Type Stand (top: 12V/10W flat filament tungsten, bottom: 5W fluorescent
377-413*	Pole-Type Stand (top: 12V/10W flat filament tungsten, bottom: 12V/10W halogen with intensity control)
377-414	Fixed-Arm Stand (top: 12V/10W flat filament tungsten, bottom: 5W fluorescent)
377-415	Fixed-Arm Stand (top: 12V/10W flat filament tungsten, bottom: 12V/10W halogen with intensity control)
377-416	Fixed-Arm Stand (top: 5W fluorescent, bottom: 5W fluorescent)

*Standard Accessory



377-972A

SPECIFICATIONS

Model.	MSM-414L	MSM-414TL
Order No.	**377-972A**	**377-974A**
Optical tube	Binocular	Trinocular
Total magnification	10X - 40X	
Eyepiece	10X (377-016)	
Objective	1X - 4X	
Working distance	80mm	
Field of view	20mm - 5mm	
Dimensions	H=13.2"x W=6.7"x D=9.3"	
Mass	13.2 lbs (6kg)	

Stereo Microscopes

SERIES 377

377-972A/377-974A SYSTEM DIAGRAM

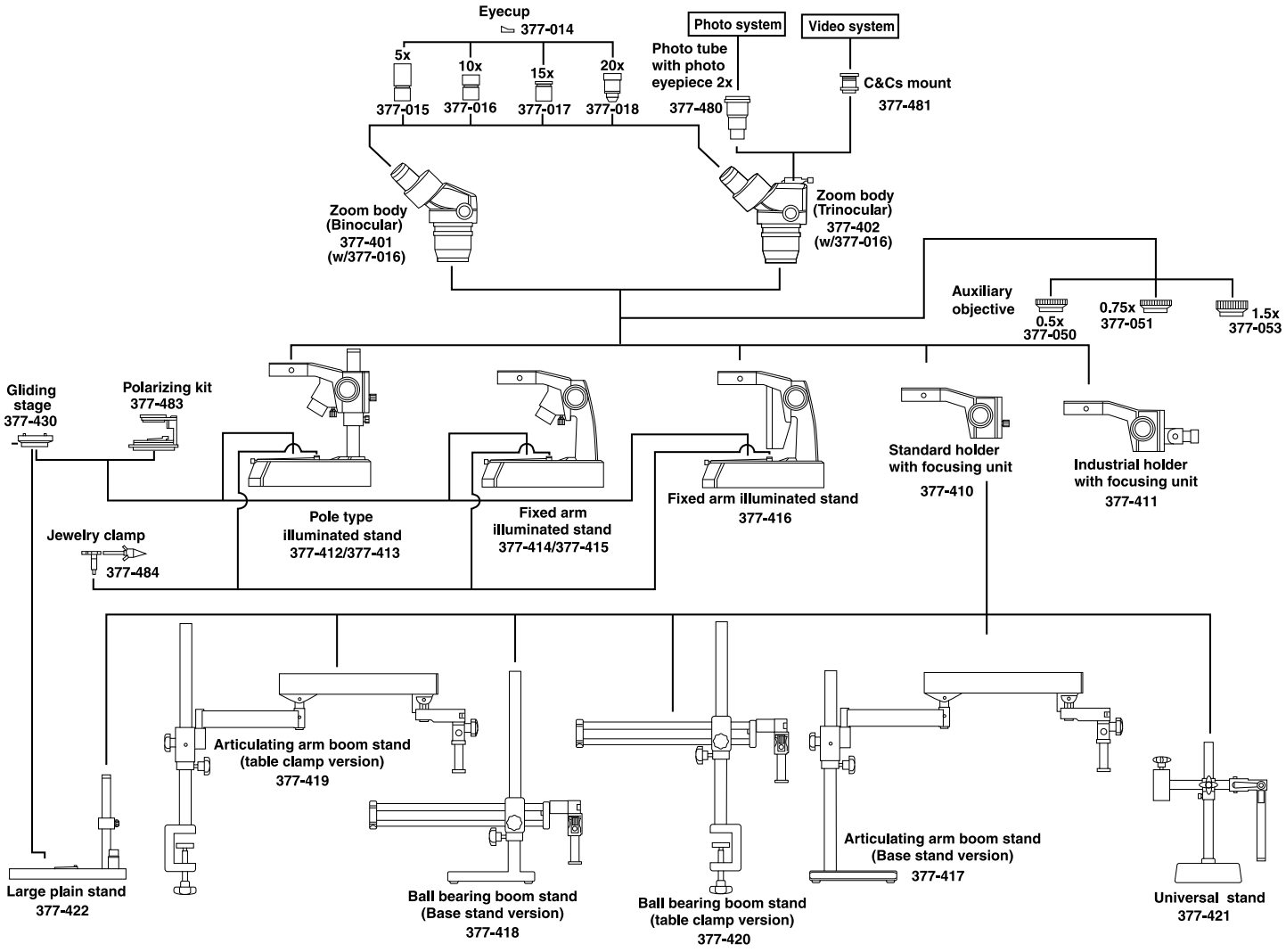

MSM-400

SERIES 377 — Stereo Microscopes

FEATURES

- Superior quality optics provide high-resolution
- Crystal sharp, high-color contrast image with excellent depth of field
- Always in sharp focus at all magnifications
- The Parfocal Optical System allows relaxed strain-free viewing
- Long working distance
- Extreme large field of view (23mm diameter)

The MSM-465L, Order No. 377-990A, is a high-accuracy four-step magnification stereo microscope. With a horizontal changer allowing 6X, 12X, 25X, and 50X magnifications with a standard 1X objective and 10X eyepieces, the MSM-465L has limitless capabilities for electrical small part inspection.

The MSM-464L, Order No. 377-991A, with its vertical five-step magnification changer is ideal for small part assembly. This stereo microscope with standard 6.4X, 10X, 16X, 25X, and 40X magnifications, has flexibility from 3.2X to 160X magnifications.



MSM-465L
377-990A



MSM-464L
377-991A

Optional Accessories

Video System

Order No.	Description
377-488	Video System* for 377-990A
377-489	Video System* for 377-991A

* Converts Binocular to Trinocular

Accessories

Order No.	Description
64AAB214	LED variable ring light

Digital Imaging with Software

Order No.	Description
64AAB429	MOTICAM 2, 2.0 MEGAPIXEL-1/3" CMOS, USB
64AAB529	MOTICAM 3+, 3.0 MEGAPIXEL-1/2" CMOS, USB
64AAB431	MOTICAM 5, 5.0 MEGAPIXEL-1/2.5" CMOS, USB
64AAB526	MOTICAM 1080, 2.0 MEGAPIXEL-1/2.8" CMOS, USB/HDMI

SPECIFICATIONS

Model. Order No.	MSM-465L 377-990A	MSM-464TL 377-991A
Optical tube	Binocular*	Binocular*
Total magnification	6X - 50X	6.4X - 40X
Eyepiece	10X (377-456)	10X (377-456)
Objective	.6X, 1.2X, 2.5X, 5X	.6X, 1X, 1.6X, 2.5X, 4X
Working distance	89mm	89mm
Field of view	23mm (w/377-456)	23mm (w/377-456)
Dimensions	H=14.6"x W=13"x D=11"	H=14.3"x W=13"x D=11"
Mass	15.5 lbs (7kg)	15.5 lbs (7kg)
Stand	Transmitted Light Stand (377-428)	Transmitted Light Stand (377-428)

* For Video System, see upper left table (optional accessories)

Stereo Microscopes

SERIES 377

377-990A/377-991A SYSTEM DIAGRAM

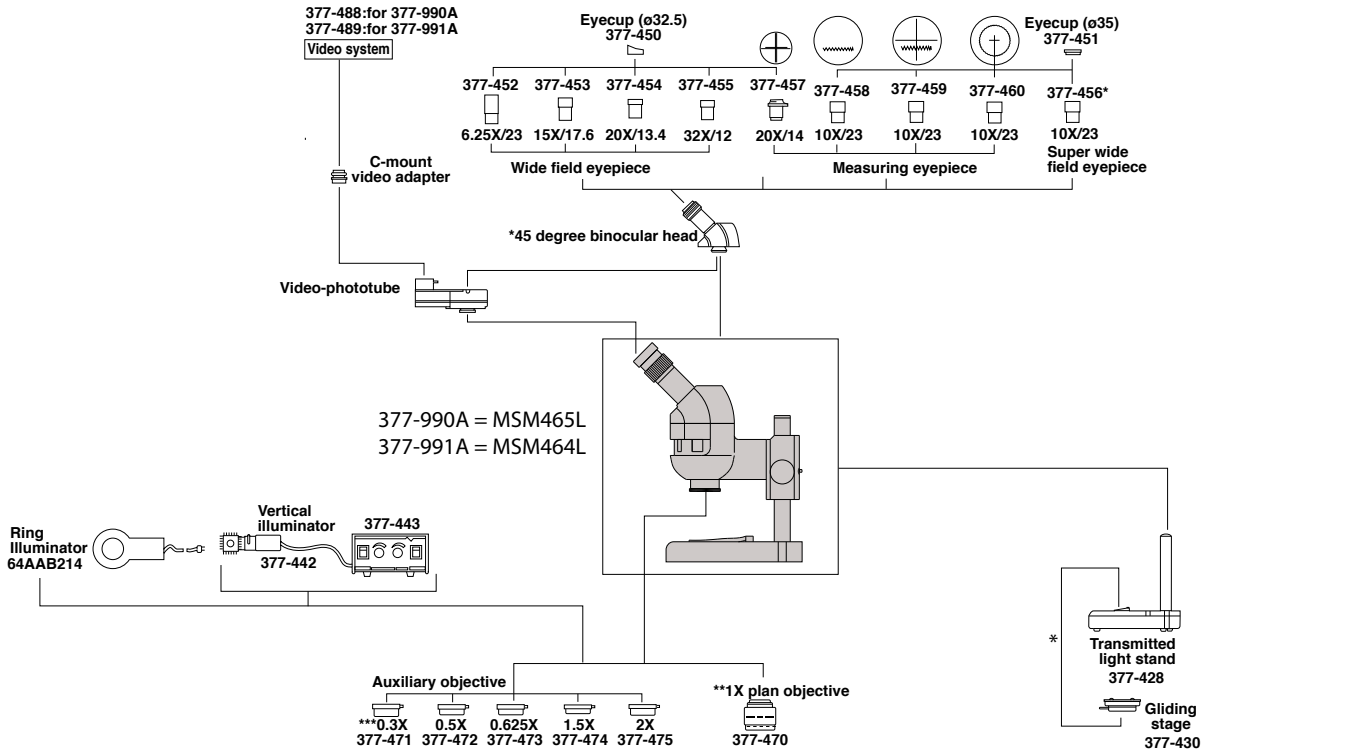

Optional Stand

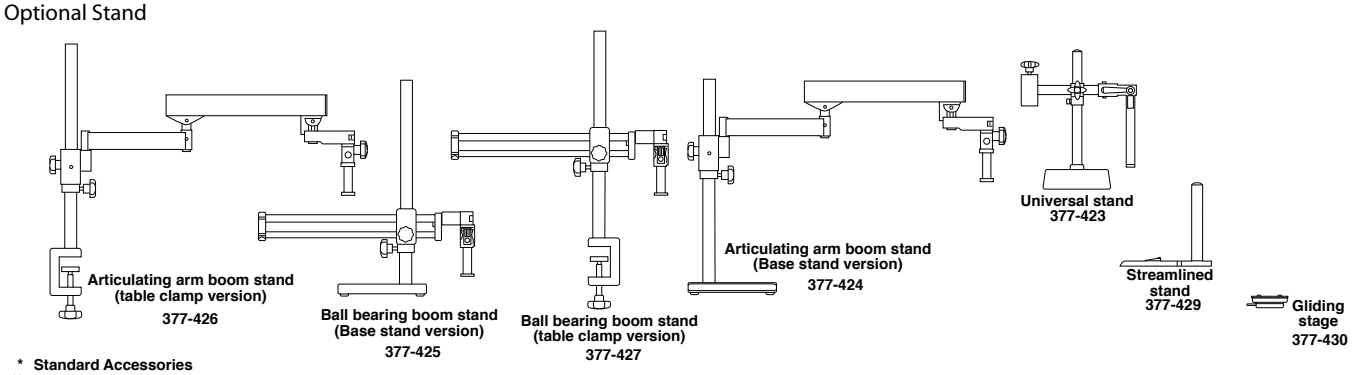

* Standard Accessories
** 1X plan objective can replace 1X standard built-in objective
*** 350mm long stand post is required. (377-431)

Pocket Magnifiers

SERIES 183

FEATURES

- Suitable for inspecting metal surfaces.

SPECIFICATIONS

Magnification	Order No.	Remarks
25X	**183-201**	Pen type
	183-202	With stand
50X	**183-203**	With stand



183-201



183-202



183-203

Pocket Comparators

SERIES 183

FEATURES

- By replacing optional reticles, dimensional, angle and other types of measurements can be performed.
- Illuminator (**950757**) is available.

SPECIFICATIONS

Magnification	Order No.	Remarks
8X	**183-101**	Optional reticles available
10X	**183-131**	Optional reticles available



183-101

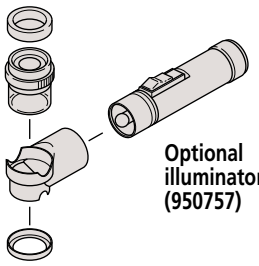

Optional illuminator (950757)

Optional Reticles for Pocket Comparators

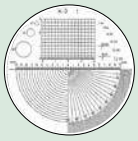

183-102



183-103



183-104

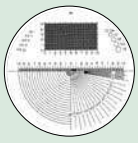

183-105



183-106



183-107



183-108



183-109



183-110

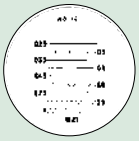

183-111

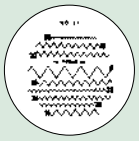

183-112



183-113

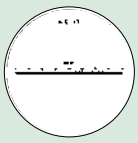

183-114



183-115

Pocket Comparator 8X with Reticles Set

Set No.	
183-901	183-101, 183-106
183-902	183-101, 183-102, 183-106, 183-107, 183-112, 183-113, 183-114
183-903	183-101, 183-102, 183-106, 183-107, 183-109, 183-113, 183-115
183-904	183-101, 183-102

Zoom Loupe

SERIES 183

FEATURES

- Allows the user 8X - 16X zoom observation.
- Magnification indicator is provided for 8X, 10X, 12X, 14X and 16X observation.
- Metric and inch scales are provided for measuring.
- Comes with a carrying case.



183-304

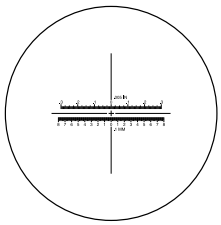

Reticle provided

SPECIFICATIONS

Magnification	Order No.	Remarks
8X - 16X	**183-304**	With reticle (Scale graduation: 0.1mm, .005"

Clear Loupe

SERIES 183



183-301



183-302



183-303

SPECIFICATIONS

Magnification	Order No.	Remarks
7X	**183-301**	Drawtube removable
10X	**183-302**	Drawtube removable
15X	**183-303**	Drawtube removable

Mitutoyo

Quick Guide to Precision Measuring Instruments

Erect Image and Inverted Image

An image of an object projected onto a screen is erect if it is orientated the same way as the object on the stage. If the image is reversed top to bottom, left to right and by movement with respect to the object on the stage (as shown in the figure below) it is referred to as an inverted image (also known as a reversed image, which is probably more accurate).

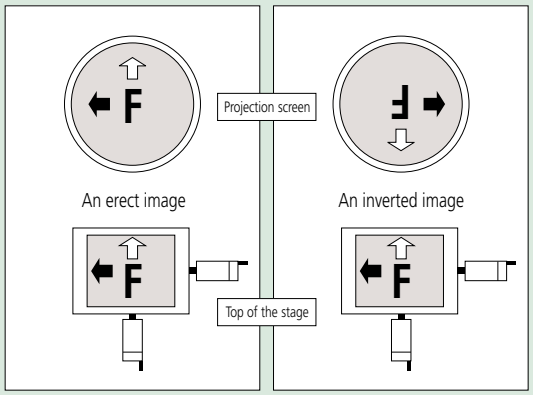

F Workpiece
⬅ X-axis movement
⇦ Y-axis movement

Magnification Accuracy

The magnification accuracy of a projector when using a certain lens is established by projecting an image of a reference object and comparing the size of the image of this object, as measured on the screen, with the expected size (calculated from the lens magnification, as marked) to produce a percentage magnification accuracy figure, as illustrated below. The reference object is often in the form of a small, graduated glass scale called a stage micrometer or standard scale, and the projected image of this is measured with a larger glass scale known as a reading scale.

(Note that magnification accuracy is not the same as measuring accuracy.)

$$\Delta M(\%) = \frac{L - \ell M}{\ell M} \times 100$$

ΔM(%): Magnification accuracy expressed as a percentage of the nominal lens magnification
L : Length of the projected image of the reference object measured on the screen
ℓ : Length of the reference object
M : Magnification of the projection lens

Type of Illumination

- Contour illumination: An illumination method to observe a workpiece by transmitted light and is used mainly for measuring the magnified contour image of a workpiece.
- Coaxial surface illumination: An illumination method whereby a workpiece is illuminated by light transmitted coaxially to the lens for the observation/measurement of the surface. (A half-mirror or a projection lens with a built-in half-mirror is needed.)
- Oblique surface illumination: A method of illumination by obliquely illuminating the workpiece surface. This method provides an image of enhanced contrast, allowing it to be observed three-dimensionally and clearly. However, note that an error is apt to occur in dimensional measurement with this method of illumination.
  (An oblique mirror is needed. Models in the PJ-H30 series are supplied with an oblique mirror.)

Telecentric Optical System

An optical system based on the principle that the principal ray is aligned parallel to the optical axis by placing a lens stop on the focal point on the image side. Its functional feature is that the image will not vary in size though the image blurs as the object is shifted along the optical axis.

For measuring projectors and measuring microscopes, an identical effect is obtained by placing a lamp filament at the focal point of a condenser lens instead of a lens stop so that the object is illuminated with parallel beams. (See the figure below.)

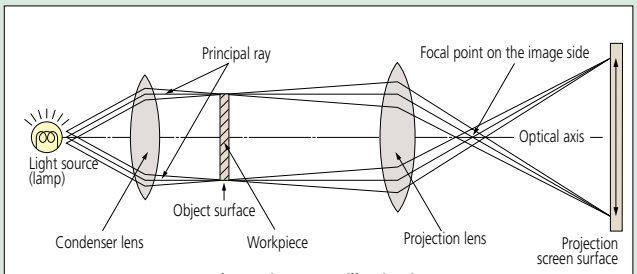

Telecentric contour illumination

Working distance

Refers to the distance from the face of the projection lens to the surface of a workpiece in focus. It is represented by L in the diagram below.

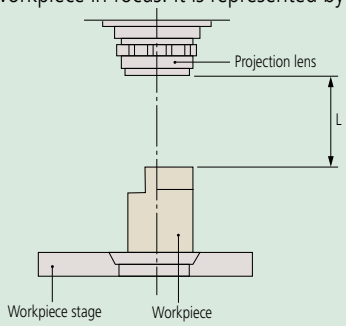

Parallax error

This is the displacement of an object against a fixed background caused by a change in the observer's position and a finite separation of the object and background planes.

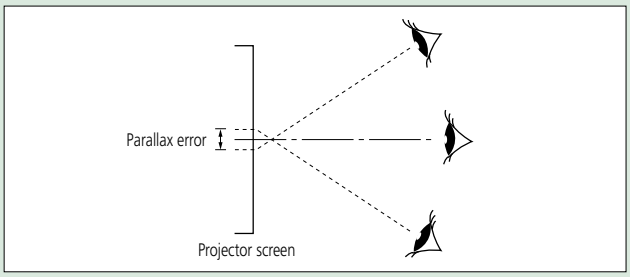

Field of view diameter

The maximum diameter of workpiece that can be projected using a particular lens.

$$\text{Field of view diameter (mm)} = \frac{\text{Screen diameter of profile projector}}{\text{Magnification of projection lens used}}$$

Example: If a 5X magnification lens is used for a projector with a screen of ø500mm:
Field of view diameter is given by $\frac{500\text{mm}}{5} = 100\text{mm}$

Numerical Aperture (NA)

The NA figure is important because it indicates the resolving power of an objective lens. The larger the NA value the finer the detail that can be seen. A lens with a larger NA also collects more light and will normally provide a brighter image with a narrower depth of focus than one with a smaller NA value.

$$NA = n \cdot \sin\theta$$

The formula above shows that NA depends on n, the refractive index of the medium that exists between the front of an objective and the specimen (for air, n=1.0), and angle θ, which is the half-angle of the maximum cone of light that can enter the lens.

Resolving Power (R)

The minimum detectable distance between two image points, representing the limit of resolution. Resolving power (R) is determined by numerical aperture (NA) and wavelength (λ) of the illumination.

$$R = \frac{\lambda}{2 \cdot NA} \ (\mu m)$$

λ = 0.55μm is often used as the reference wavelength

Working Distance (W.D.)

The distance between the front end of a microscope objective and the surface of the workpiece at which the sharpest focusing is obtained.

Parfocal Distance

The distance between the mounting position of a microscope objective and the surface of the workpiece at which the sharpest focusing is obtained. Objective lenses mounted together in the same turret should have the same parfocal distance so that when another objective is brought into use the amount of refocusing needed is minimal.

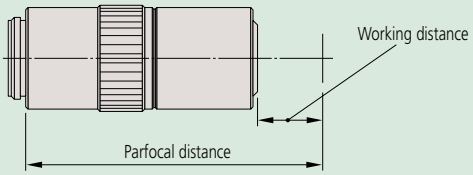

Infinity Optical System

An optical system where the objective forms its image at infinity and a tube lens is placed within the body tube between the objective and the eyepiece to produce the intermediate image. After passing through the objective the light effectively travels parallel to the optical axis to the tube lens through what is termed the infinity space within which auxiliary components can be placed, such as differential interference contrast (DIC) prisms, polarizers, etc., with minimal effect on focus and aberration corrections.

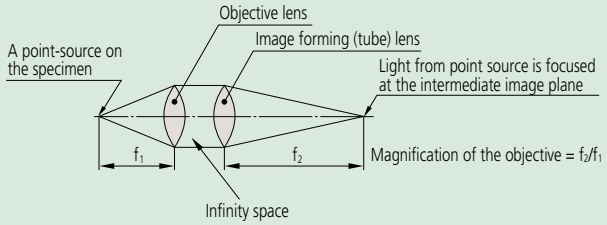

Finite Optical System

An optical system that uses an objective to form the intermediate image at a finite position. Light from the workpiece passing through the objective is directed toward the intermediate image plane (located at the front focal plane of the eyepiece) and converges in that plane.

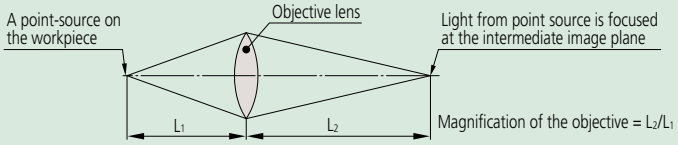

Focal Length (f)

unit: mm

The distance from the principal point to the focal point of a lens: if f1 represents the focal length of an objective and f2 represents the focal length of an image forming (tube) lens then magnification is determined by the ratio between the two. (In the case of the infinity-correction optical system.)

$$\text{Objective magnification} = \frac{\text{Focal length of the image-forming (tube) lens}}{\text{Focal length of the objective}}$$

Example: $1X = \frac{200}{200}$ Example: $10X = \frac{200}{20}$

Focal Point

Light rays traveling parallel to the optical axis of a converging lens system and passing through that system will converge (or focus) to a point on the axis known as the rear focal point, or image focal point.

Depth of Focus (DOF)

unit: mm

Also known as depth of field, this is the distance (measured in the direction of the optical axis) between the two planes which define the limits of acceptable image sharpness when the microscope is focused on an object. As the numerical aperture (NA) increases, the depth of focus becomes shallower, as shown by the expression below:

$$DOF = \frac{\lambda}{2 \cdot (NA)^2}$$ λ = 0.55μm is often used as the reference wavelength

Example: For an **M Plan Apo 100X** lens (NA = 0.7)
The depth of focus of this objective is

$$\frac{0.55\mu m}{2 \times 0.7^2} = 0.6\mu m$$

Bright-field Illumination and Dark-field Illumination

In brightfield illumination a full cone of light is focused by the objective on the specimen surface. This is the normal mode of viewing with an optical microscope. With darkfield illumination, the inner area of the light cone is blocked so that the surface is only illuminated by light from an oblique angle. Darkfield illumination is good for detecting surface scratches and contamination.

Apochromat and Achromat Objectives

An apochromat objective is a lens corrected for chromatic aberration (color blur) in three colors (red, blue, yellow).
An achromat objective is a lens corrected for chromatic aberration in two colors (red, blue).

Quick Guide to Precision Measuring Instruments

Magnification

The ratio of the size of a magnified object image created by an optical system to that of the object. Magnification commonly refers to lateral magnification although it can mean lateral, vertical, or angular magnification.

Principal Ray

A ray considered to be emitted from an object point off the optical axis and passing through the center of an aperture diaphragm in a lens system.

Aperture Diaphragm

An adjustable circular aperture which controls the amount of light passing through a lens system. It is also referred to as an aperture stop and its size affects image brightness and depth of focus.

Field Stop

A stop which controls the field of view in an optical instrument.

Telecentric System

An optical system where the light rays are parallel to the optical axis in object and/or image space. This means that magnification is nearly constant over a range of working distances, therefore, almost eliminating perspective error.

Erect Image

An image in which the orientations of left, right, top, bottom and moving directions are the same as those of a workpiece on the workstage.

Field number (FN), real field of view, and monitor display magnification

unit: mm

The observation range of the sample surface is determined by the diameter of the eyepiece's field stop. The value of this diameter in millimeters is called the field number (FN). In contrast, the real field of view is the range on the workpiece surface when actually magnified and observed with the objective lens.
The real field of view can be calculated with the following formula:

(1) The range of the workpiece that can be observed with the microscope (diameter)

$$\text{Real field of view} = \frac{\text{FN of eyepiece}}{\text{Objective lens magnification}}$$

Example: The real field of view of a 1X lens is $24 = \frac{24}{1}$

The real field of view of a 10X lens is $2.4 = \frac{24}{10}$

(2) Monitor observation range

$$\text{Monitor observation range} = \frac{\text{The size of the camera image sensor (diagonal length)}}{\text{Objective lens magnification}}$$

• Size of image sensor

Format	Diagonal length	Length	Height
1/3″	6.0	4.8	3.6
1/2″	8.0	6.4	4.8
2/3″	11.0	8.8	6.6

(3) Monitor display magnification

$$\text{Monitor display magnification} = \text{Objective lens magnification} \times \frac{\text{Display diagonal length on the monitor}}{\text{Diagonal length of camera image sensor}}$$



Surftest

Formtracer

Contracer

Roundtest





SV-C3200 / SV-C4500

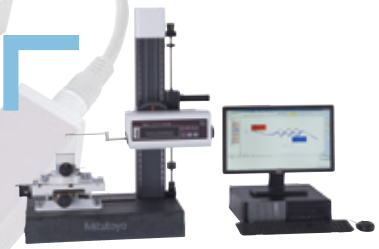

CV-2100



SJ-410

INDEX

Surftest	
Surftest SJ-210	J-2
Surftest SJ-310	J-3
Surftest SJ-210/310 Optional Accessories	J-4,5
Surftest SJ-410	J-6,7
Surftest SJ-500/P, SV-2100	J-8,9
Surftest SV-3200	J-10,11
Surftest Extreme SV-3000CNC	J-12
Surftest Extreme SV-M3000CNC	J-13
Formtracer	
Formtracer SV-C3200 / SV-C4500	J-14,15
Formtracer Extreme SV-C4500CNC	J-16,17
Formtracer CS-3200	J-18,19
Formtracer Extreme CS-5000CNC / CS-H5000CNC	J-20,21
Optional Styli for Surface Roughness Measurement	J-22,23
Optional Accessories for Automatic Measurement	J-24
Optional Accessories for Surftest / Formtracer	J-25
Quick Guide to Precision Measuring Instruments	J-26,27
Contracer	
Contracer CV-2100	J-28,29
Contracer CV-3200 / CV-4500	J-30,31
Optional Arms and Styli for Contour Measurement	J-32-34
Optional Accessories for Automatic Measurement	J-35
Optional Accessories for Contracer / Formtracer	J-36
Quick Guide to Precision Measuring Instruments	J-37,38
Roundtest	
Roundtest RA-120 / 120P	J-39,40
Roundtest RA-1600 / RA-1600M	J-41,42
Roundtest RA-2200AS / DS / AH / DH	J-43,44
Roundtest RA-H5200AS / AH	J-45,46
Roundtest Extreme RA-2200CNC / RA-H5200CNC	J-47,48
Optional Styli for Roundtest	J-49
Optional Accessories for Roundtest	J-50,51
Eco-Fix Kit Form-S & L	J-52
Quick Guide to Precision Measuring Instruments	J-53,54



SV-C4500 CNC

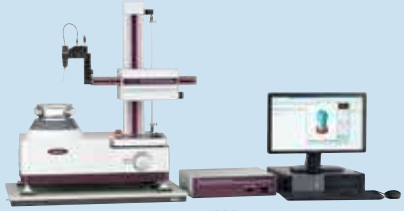

RA-1600M

Mitutoyo

Surftest SJ-210

SERIES 178 — Portable Surface Roughness Tester



Surftest SJ-210









FEATURES

- The 2.4-inch color graphic LCD provides excellent readability and an intuitive display that is easy to use. The LCD also includes a backlight for improved visibility in dark environments.
- The Surftest SJ-210 can be easily operated using the buttons on the front of the unit and under the sliding cover.
- Up to 10 measurement conditions and one measured profile can be stored in the internal memory.
- An optional memory card can be used as an extended memory to store large quantities of measured profiles and conditions.
- Access to each feature can be password-protected, which prevents unintended operations and allows you to protect your settings.
- The display interface supports 16 languages, which can be freely switched.
- An alarm warns you when the cumulative measurement distance exceeds a preset limit.
- The Surftest SJ-210 complies with the following standards: JIS (JIS-B0601-2001, JIS-B0601-1994, JIS B0601-1982), VDA, ISO-1997, and ANSI.
- In addition to calculation results, the Surftest SJ-210 can display sectional calculation results and assessed profiles, load curves, and amplitude distribution curves.

SPECIFICATIONS/CONFIGURATION

Model No.	SJ-210					
Order No. (inch/mm)	**178-561-01A**	**178-561-02A**	**178-563-01A**	**178-563-02A**	**178-565-01A**	**178-565-02A**
Drive unit	Standard type (**178-230-2**)		Retractable type (**178-235**)		Transverse tracing type (**178-233-2**)	
Detector	0.75mN type (**178-296**)	4mN type (**178-390**)	0.75mN type (**178-296**)	4mN type (**178-390**)	0.75mN type (**178-387**)	4mN type (**178-386**)
Display unit	Compact type (178-253A)					
Detector: Tip angle	60°	90°	60°	90°	60°	90°
Stylus tip radius	2µm	5µm	2µm	5µm	2µm	5µm
Detector measuring force	0.75mN	4mN	0.75mN	4mN	0.75mN	4mN
Standard accessories	**12BAA303** Connecting cable **178-602** Roughness specimen (Ra 3.00µm) **12BAK699** Carrying case **12BAK700** Calibration stage **12BAK820** Protective sheets for display AC Adapter Operation manual Quick reference manual Warranty				**12BAA303** Connecting cable **178-606** Roughness specimen (Ra 1.00µm) **12AAE643** Point-contact adapter **12AAE644** V-type adapter **12BAK699** Carrying case **12BAK700** Calibration stage **12BAK820** Protective sheets for display AC Adapter, Operation manual Quick reference manual, Warranty	

DIMENSIONS Display unit, Drive unit

Drive unit inside display unit (Standard dectector installed in drive unit) SJ-210 series

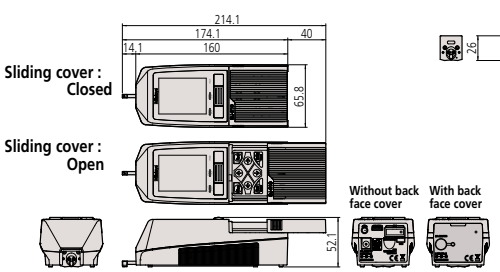

Standard drive unit

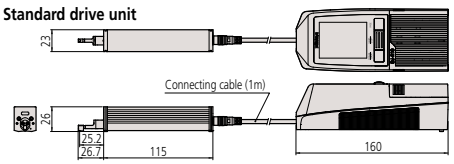

Drive unit not stored inside display unit (Standard dectector installed in drive unit) SJ-210 series Standard drive unit

*** For Retractable and Transverse type drive units, please see pg. J-3.**

Unit: mm

Technical Data: SJ-210

X axis (drive unit)
- Measuring range: .70"(17.5mm) .22"(5.6mm) Transverse type
- Measuring speed: .01, .02, .03"/s (0.25, 0.5, 0.75mm/s) .039"/s (1mm/s) (Returning))

Detector
- Range: 360µm (-200µm to +160µm)
- Measuring method: skidded
- Measuring force: 4mN (0.75mN)
- Stylus tip: Diamond, 90° / 5µmR (60° / 2µmR)
- Skid radius of curvature: 40mm
- Skid force: less than 400mN
- Type: Differential inductance

Power supply: Two-way power supply: battery (rechargeable Ni-MH battery) and AC adapter
- Charging time: about 4 hours (may vary due to ambient temperature)
- Endurance: about 1000 measurements (differs slightly due to use conditions/ environment)

External I/O: USB I/F, Digimatic Output, Printer Output, RS-232C I/F, Foot SW I/F

Data storage: Memory card (2GB) (option **12AAL069**)

Dimensions (W x D x H)
- Display unit: 2.05x2.59x6.3"(52.1 x 65.8 x 160mm)
- Drive unit: 6.85x2.59x2"(115 x 23 x 26mm)

Mass: About 1.1lb (0.5kg) (Display unit + Drive unit + Standard detector)

Evaluation Capability: SJ-210

Applicable standards:
JIS'82, JIS'94, JIS'01, ISO'97, ANSI, VDA

Assessed profiles:
Primary profile, Roughness profile, DF profile, Roughness profile-Motif

Evaluation parameters:
Ra, Rc, Ry, Rz, Rq, Rt, Rmax, Rp, Rv, R3z, Rsk, Rku, Rc, RPc, Rsm, Rz1max, S, HSC, RzJIS, Rppi, RΔa, RΔq, Rlr, Rmr, Rmr(c), RδC, Rk, Rpk, Rvk, Mr1, Mr2, A1, A2, Vo, Rpm, tp, Htp, R, Rx, AR, Possible Customize

Analysis graphs: Bearning area curve / Amplitude distribution curve

Digital filters: Gaussian , 2CR75 , PC75

Cut off length: λc: .003, .01, .03, .1" (0.08, 0.25, 0.8, 2.5mm) λs: .1, .3"(2.5, 8µm)

Sampling length: .003, .01, .03, .1" or arbitrary (0.08, 0.25, 0.8, 2.5mm) or arbitrary

Number of sampling lengths (x n):
x1, x2, x3, x4, x5, x6, x7, x8, x9, x10 arbitrary length (0.3 to16.0mm: 0.01mm interval)
x1, x2, x3, x4, x5, x6, x7, x8, x9, x10 arbitrary length (0.3 to 5.6mm: 0.01mm interval)*
* Only for Transverse tracing drive unit type

Function: SJ-210

Customization: Desired parameters can be selected for calculation and display.

Go/no-go judgment: By max value / 16% / Standard dev.
Storage of measurement condition: Save the conditions at power OFF

Storage: Internal memory: Measurement condition (10 sets), Measured profile (1set)
Memory card (Option): 500 measurement conditions, 10,000 measured profiles, 500 display images
Text file (Measurement conditions / Measured profile / Assessed profile / Bearing area curve / Amplitude distribution curve)

Calibration: Auto-calibration with the entry of numerical value / Average calibration with multiple measurement (Max.5 times) is available

Technical Data: SJ-310

X axis (drive unit)
- Measuring range: .70"(17.5mm) .22"(5.6mm) Transverse type
- Measuring speed: .01, .02, .03"/s (0.25, 0.5, 0.75mm/s) .039"/s(1mm/s) Returning

Detector
- Range: 360µm (-200µm to +160µm)
- Measuring method: skidded
- Measuring force: 4mN (0.75mN)
- Stylus tip: Diamond, 90° / 5µmR (60° / 2µmR)
- Skid radius of curvature: 40mm
- Skid force: less than 400mN
- Type: Differential inductance

Power supply: Two-way power supply: battery (rechargeable Ni-MH battery) and AC adapter

Battery
- Charging time: 4 hours maximum
- Recharge cycles: Approximately 1500 times (slightly varies with the usage and environmental conditions)

External I/O: USB I/F, Digimatic Output, RS-232C I/F, External SW I/F

Data storage: Memory card (8GB) (option **12AAA841**)

Dimensions (W x D x H)
- Control unit: 10.8x4.29x7.8" (275 x 109 x 198mm)
- Drive unit: 6.85x2.59x2"(115 x 23 x 26mm)

Mass
- Display unit: Approx. 3.7lb (1.7kg)
- Drive unit: .4lb (0.2kg)

Evaluation Capability: SJ-310

Applicable standards:
JIS'82, JIS'94, JIS'01, ISO'97, ANSI, VDA

Assessed profiles:
P (primary profile), R (roughness profile), DIN4776, roughness motif, waviness motif

Evaluation parameters:
Ra, Ry, Rz, Rt, Rp, Rq, Rv, Rsk, Rku, Rc, RSm, S, RPc, R3z, Rmr(c), Rpk, Rvk, Rδc,, Rk, Mr1, Mr2, Lo, Rppi, R, AR, Rx, A1, A2, Vo, HSC, Rmr, SK, Ku, RΔa, RΔq, Rlr, λa, λq, Rpm, RzJIS (JIS'01), tp (ANSI), Htp (ANSI), Wte, Wx, W, AW, Rz1max (ISO), Rmax (VDA, ANSI, JIS'82), Possible Customize

Analysis graphs:
Bearing Area Curve (BAC), Amplitude Distribution Curve (ADC)

Digital filter: 2CR, PC75, Gaussian

Cutoff length: λc: .003, .01, .03, .1, .3" (0.08, 0.25, 0.8, 2.5, 8mm) λs: .1, .3"(2.5, 8µm)

Sampling length: .003, .01, .03, .1, .3" or arbitrary (0.08, 0.25, 0.8, 2.5, 8mm) or arbitrary

Number of sampling lengths (x n):
x1, x2, x3, x4, x5, x6, x7, x8, x9, x10 arbitrary length (0.3 to16.0mm: 0.01mm interval)
x1, x2, x3, x4, x5, x6, x7, x8, x9, x10 arbitrary length (0.3 to 5.6mm: 0.01mm interval)*
* Only for Transverse tracing drive unit type

Printer: Thermal type

Printing width: 48mm (paper width: 58mm)

Recording magnification:
Vertical magnification: 10X to 100,000X, Auto
Horizontal magnification: 1X to 1,000X, Auto

Function: SJ-310

Customization: Desired parameters can be selected for calculation and display.

Statistical processing: Maximum value, minimum value, mean value, standard deviation, pass rate, histogram of each parameter

Go/no-go judgment: maximum value rule, 16% rule, average value rule, standard deviation (1σ, 2σ, 3σ)

Storage: Internal memory: Measurement condition (10 sets)

Memory card (Option): 500 measurement conditions, 10,000 measured profiles, 500 display images, Text file (Measurement conditions / Measured profile / Assessed profile / Bearing area curve / Amplitude distribution curve), 500 statistical data, etc.

Calibration: Auto-calibration with the entry of numerical value / Average calibration with multiple measurement (Max.12 times) is available.

Power-saving function: Auto-sleep-function, Auto light-off of Backlight by ECO mode.

Surftest SJ-310

SERIES 178 — Portable Surface Roughness Tester



Surftest SJ-310

FEATURES

- The data processing unit offers large 5.7-inch color graphic LCD touch-panel for superior readability and operability. The LCD also includes a backlight for improved visibility in dark environments.
- The excellent user interface provides intuitive and easy-to-understand operability.
- Complies with the following standards: JIS (JIS-B0601-2001, JIS-B0601-1994, JIS B0601-1982), VDA, ISO- 1997, and ANSI.
- The Measure-Start and other frequently used buttons are strengthened to resist wear and the detrimental effects of workshop contaminants.
- Equipped with a large-capacity battery allowing approximately 1500 measurements when fully charged.
- Includes convenient carrying case for protection in the field.
- A high-speed printer is built into the main unit. Either landscape or portfolio mode can be selected according to the application. Paper saving mode is supported.
- The display interface supports 16 languages, which can be easily switched.
- 10 sets of measurement conditions can be saved in the measurement unit–an optional memory card can save measurement conditions and the measured profile.

SPECIFICATIONS/CONFIGURATION

Model No.	SJ-310					
Order No. (inch/mm)	**178-571-01A**	**178-571-02A**	**178-573-01A**	**178-573-02A**	**178-575-01A**	**178-575-02A**
Drive unit	Standard type (**178-230-2**)		Retractable type (**178-235**)		Transverse tracing type (**178-233-2**)	
Detector	0.75mN type (**178-296**)	4mN type (**178-390**)	0.75mN type (**178-296**)	4mN type (**178-390**)	0.75mN type (**178-387**)	4mN type (**178-386**)
Display unit	Standard type with printer					
Detector: Tip angle	60°	90°	60°	90°	60°	90°
Stylus tip radius	2µm	5µm	2µm	5µm	2µm	5µm
Detector measuring force	0.75mN	4mN	0.75mN	4mN	0.75mN	4mN
Standard accessories	**12AAM475** Connecting cable **12AAA217** Nosepiece for plane surface **12AAA218** Nosepiece for cylinder **12AAA216** Supporting leg **12BAK700** Calibration stage **12BAG834** Stylus pen **12BAL402** Protection sheet **270732** Printer paper (5 pieces) **12BAL400** Carrying case Roughness reference specimen (Ra 3µm), AC adapter, Philips screwdriver, Strap for stylus pen, Operation manual, Quick reference manual, Warranty				**12AAM475** Connecting cable **12AAE643** Point-contact adapter **12AAE644** V-type adapter **12BAK700** Calibration stage **12BAG834** Stylus pen **12BAL402** Protection sheet **270732** Printer paper (5 pieces) **12BAL400** Carrying case Roughness reference specimen (Ra 1µm), AC adapter, Philips screwdriver, Strap for stylus pen, Operation manual, Quick reference manual, Warranty	

DIMENSIONS Display unit, Drive unit

Unit: mm

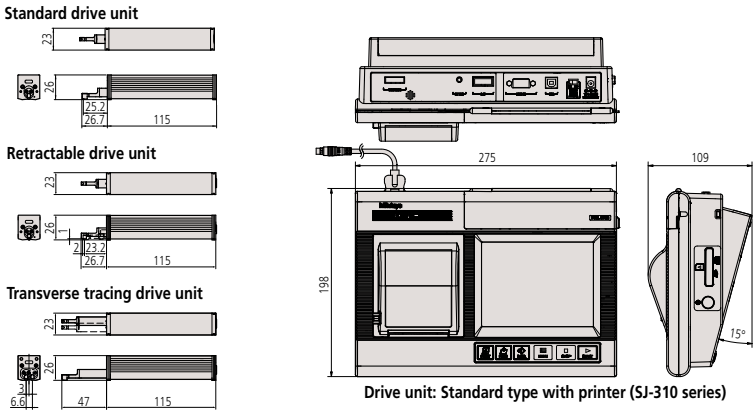

Drive unit: Standard type with printer (SJ-310 series)

Mitutoyo

Surftest / SJ-310

SERIES 178 — Optional Accessories

Detectors

Unit: mm

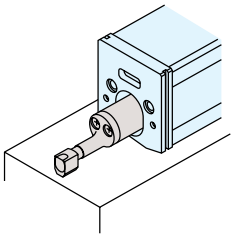

Standard detectors

Order No.	Measuring force	Stylus profiles*	Remarks column
178-296	0.75mN	2μmR/60°	Dedicated to the standard/ retractable drive unit
178-390	4 mN	5μmR/90°	
178-387	0.75mN	2μmR/60°	Dedicated to the transverse tracing drive unit
178-386	4 mN	5μmR/90°	
178-395	0.75mN	2μmR/90°	Dedicated to the standard/ retractable drive unit
178-391	4 mN	10μmR/90°	

* Tip radius / Tip angles

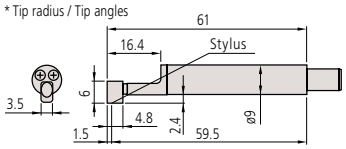

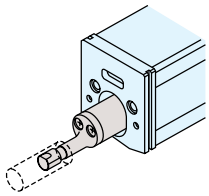

Small hole detectors

Order No.	Measuring force	Stylus profiles*	Remarks column
178-383	0.75mN	2μmR/60°	Minimum measurable hole diameter: ø4.5mm
178-392	4 mN	5μmR/90°	

* Tip radius / Tip angles

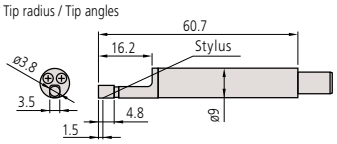

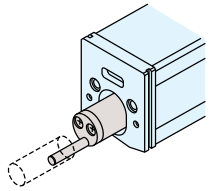

Extra small hole detectors

Order No.	Measuring force	Stylus profiles*	Remarks column
178-384	0.75mN	2μmR/60°	Minimum measurable hole diameter: ø2.8mm
178-393	4 mN	5μmR/90°	

* Tip radius / Tip angles

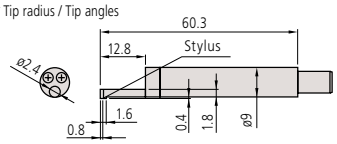

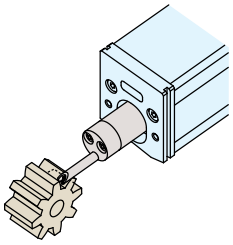

Gear-tooth surface detectors

Order No.	Measuring force	Stylus profiles*
178-388	0.75mN	2μmR/60°
178-398	4 mN	5μmR/60°

* Tip radius / Tip angles

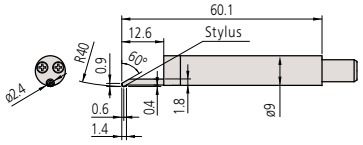

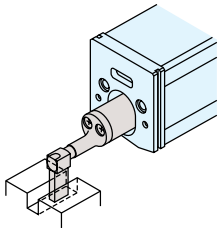

Deep groove detectors

Order No.	Measuring force	Stylus profiles*	Remarks column
178-385	0.75mN	2μmR/60°	Not available for the transverse tracing drive unit
178-394	4 mN	5μmR/90°	

* Tip radius / Tip angles

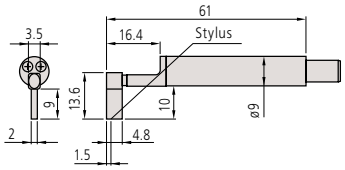

SJ-Printer for SJ-210

Assessed profiles and calculation results and curves can be printed out by connecting the SJ-210-dedicated printer, which is palm sized (W x D x H: 93x125x70mm) and can run on an internal battery.

- Power supply can be selected. (AC adapter or battery pack)
- Printable items: Measurement conditions, calculation results, assessed profile, bearing area curve (BAC), amplitude distribution curve (ADC), and environment settings.



178-421A

*Not compatible with older **SJ-201** models.

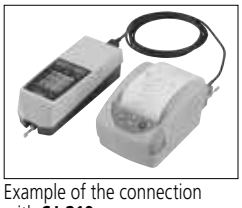

Example of the connection with **SJ-210**

Durable Printer paper (25m, 5 rolls/set): **12AAA876**

Printer paper (5 packs): **270732**

RS-232C cable: **12AAL067**

DP-1VR

It is possible to process Digimatic data output from the Surftest SJ series with the DP-1VR. This compact, hand-held device can provide printouts of measurement data and various statistical analyses results such as histograms, D-charts, and Xbar-R control charts. With optional output cables, DP-1VR is also capable of RS-232C output of measurement data to a PC (cable **09EAA084**) and go/no-go condition output (cable **965516**).



264-504-5A

Connecting cable: **936937** 40"(1m)
Connecting cable: **965014** 80" (2m)
AC adapter: **09EAA088**
Printer paper: **09EAA082**



MiCAT
Mitutoyo Intelligent Computer Aided Technology
the standard in world metrology software
FORM

Free Communication Software

SJ-Tools

This program can be downloaded for FREE from the Mitutoyo website. http:www.mitutoyo.com

Output software based on Microsoft-Excel* for controlling the devices and reproducing and storing the measurement data.

* Microsoft-Excel is not included in the scope of supply.

Complete with exclusive accessories.

- Measurement device control
- Definition of measurement variables
- Graphic representation of the profile
- Storage of measurement records
- Documentation of measurement results
- Connecting cable

Optional cables (Required for software communication)

12AAL068: USB PC connecting cable (USB cable) for SJ-210
12AAD510: USB PC connecting cable (USB cable) for SJ-310/410
12AAL067: RS-232C cable for SJ-210
12AAA882: RS-232C cable for SJ-310/410
12AAH490: USB PC connecting cable for SJ-500/SV-2100



SJ-Tools input mask for Surftest SJ series

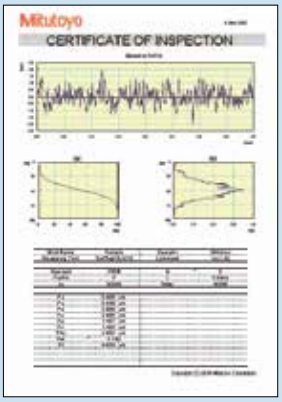

SJ-Tools output record from MS-Excel

Optional Accessories

12AAL272: SJ-210 Replacement Battery Pack
12AAN046: SJ-310 Replacement Battery Pack
12BAK820: SJ-210 Display Protection Sheet (1pc.)
12AAL066: SJ-210 Display Protection Sheet (5pcs.)
12BAL402: SJ-310 Display Protection Sheet (1pc.)
12AAN040: SJ-310 Display Protection Sheet (10pcs.)
178-601: Precision Reference Specimen (Ra 3.00 µm)
178-602: Precision Reference Specimen (Ra 119 µin / 3.00 µm)
178-603: Precision Reference Specimen – 2 values (GAR)
178-604: Precision Reference Specimen – 2 Values (MIT)
178-606: Precision Reference Specimen for Transverse Drive (Ra 0.039 µin /1.0 µm)
178-029: Manual Column Stand, must use adapter 12AAA221 to mount SJ drive unit.

Nosepiece, Adapter

Nosepiece for flat surfaces

12AAA217

- SJ-210/210R optional accessory.
- SJ-310/310R standard accessory.
- Not available for the transverse tracing drive unit.

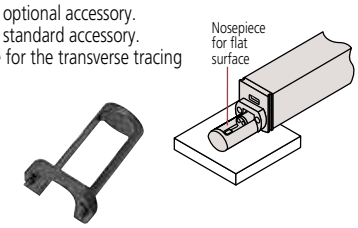

V-type adapter

12AAE644

- SJ-210/SJ-310 Transverse tracing type standard accessory.
- Dedicated to the transverse tracing drive unit.

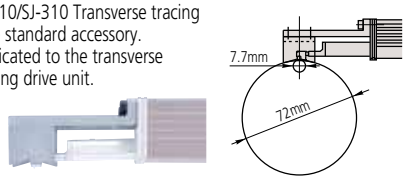

Extension rod (50mm)

12AAA210

- Not available for the transverse tracing drive unit.

(Note: Only one rod can be used.)

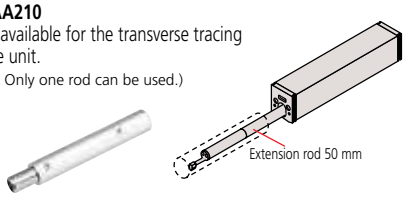

Magnetic stand adapter

12AAA221 (ø8mm)
12AAA220 (ø9.5mm)

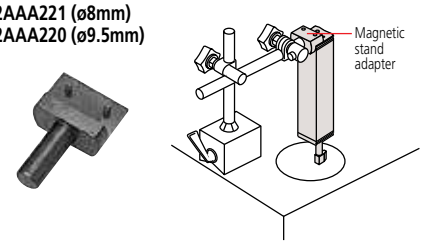

Extension cable (1m)

12BAA303

- Only one cable can be used.

Nosepiece for cylindrical surfaces

12AAA218

- SJ-210/210R optional accessory.
- SJ-310/310R standard accessory.
- Not available for the transverse tracing drive unit.
- ø30mm or smaller workpiece



Point-contact adapter

12AAE643

- SJ-210/SJ-310 Transverse tracing type standard accessory.
- Dedicated to the transverse tracing drive unit.

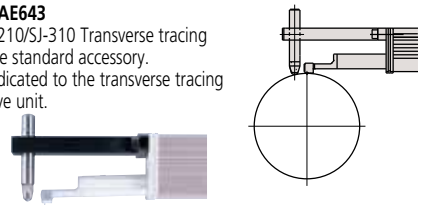

Support feet set

12AAA216

- SJ-210/210R optional accessory.
- SJ-310/310R standard accessory.
- Not available for the detector side of the transverse tracing drive unit.

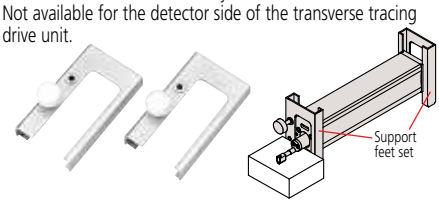

Vertical positioning adapter

12AAA219

- Not available for the transverse tracing drive unit.

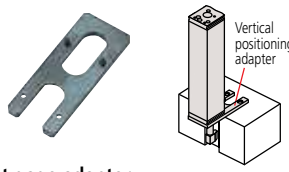

Height gage adapter

12AAA222 (9mm x 9mm)
12AAA233 (1/4" x 1/2")

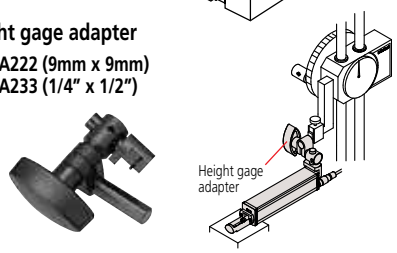

Setting attachments

* Not available for the transverse tracing drive unit

Improves measurement efficiency by allowing the setup of workpieces of the same type and the positioning of hard-to-access features of a workpiece.

No. 178-033

V-type for measuring in the cylinder axis direction



The V-width is adjustable to the cylinder diameter facilitating axial measurement of a wide range of cylinder diameters.

- Adjustable range: ø 5 - 150mm

No. 178-034

Setting attachment: Magnetic slider type



Best suited for measurement of the flat surface of a workpiece that has partial indentions and steps and that is hard to set the drive unit. Combination use with the magnet type specimen holder (Option No. 12AAA910) further improves the ease of operation.

No. 178-035

Setting attachment: Inside diameter type



Greatly facilitates measurement of internal wall surfaces of, for example, cylinder-block bores.

- Applicable diameter: ø75 - ø95mm
- Accessible depth: 30 - 135mm

Mitutoyo

Surftest SJ-410

SERIES 178 — Portable Surface Roughness Tester

FEATURES

- Both skidded and skidless measurement are possible with this series. Equipped with 46 roughness parameters that conform to the latest ISO, DIN, ANSI, and JIS standards.
- A wide-range, high-resolution detector and a drive unit provide superior high-accuracy measurement in its class.

Detector
Measuring range: 800µm
Resolution: 0.000125µm (at 8µm range)
Drive unit
Straightness/traverse length
SJ-411: 0.3µm/25mm
SJ-412: 0.5µm/50mm

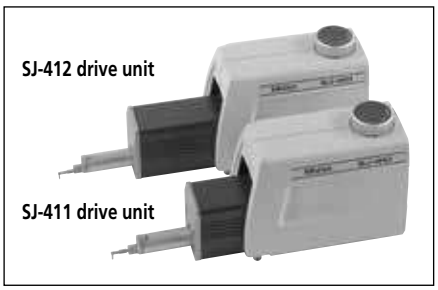

- A skidless detector and a curved surface compensation function provide efficient evaluation of cylinder surface roughness.
- Ultra-fine steps, straightness and waviness can be measured by using the skidless measurement function.
- The handheld data processing unit and the 5.7-inch color graphic LCD touch-panel provides superior readability and operability. The LCD also includes a backlight for improved visibility in dark environments.
- The excellent user interface provides intuitive and easy-to-understand operability.
- Measured data can be output to a PC with optional RS-232C or USB cable.
- Digital filter function for non-distorted roughness profiles.
- Go/no-go judgment function.
- Auto-calibration function.
- The display interface supports 16 languages, which can be freely switched.
- Simplified contour analysis function supports the four types of measurement: step, level change, area and coordinate difference.
- Access to each feature can be password-protected, which prevents unintended operations and allows you to protect your settings.
- The optional attachments for mounting on a column stand significantly increase the operability.

Skidless measurement

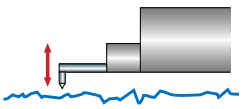

Surftest SJ-411

SPECIFICATIONS

Model No.		SJ-411	SJ-411	SJ-412	SJ-412
Order No. (inch/mm)		**178-581-01A**	**178-581-02A**	**178-583-01A**	**178-583-02A**
Detector measuring force		0.75mN	4mN	0.75mN	4mN
Evaluation range		25mm	25mm	50mm	50mm
Stylus tip	Tip angle	60°	90°	60°	90°
	Tip radius	2µm	5µm	2µm	5µm

Technical Data: X axis (drive unit)

Measuring range: 1"(25mm) (SJ-411), 2"(50mm) (SJ-412)
Measuring speed: .002, .004, .008, .02, .04"/s (0.05, 0.1, 0.5, 1.0mm/s)
Return speed: .02, .04, .08"/s (0.5, 1.0, 2.0mm/s)
Traversing direction: Backward
Traverse linearity: 12 µin / 1"(0.3µm/25mm) (SJ-411), 20 µin / 2"(0.5µm/50mm) (SJ-412)
Positioning: ±1.5° (tilting), 10mm (up/down)
Detector Range / resolution: 800µm / 0.0125µm, 80µm / 0.00125µm, 8µm / 0.000125µm (up to 2400µm with an optional stylus)
Measurement method: Skidless / skidded
Measuring force: 0.75mN (4mN)
Stylus tip: Diamond, 60° / 2µmR (90° / 5µmR)
Skid radius of curvature: 40mm
Type: Differential inductance
Power supply: Via AC adapter / rechargeable battery
Battery life: Max. app. 1000 measurements (w/o printing)
Recharge time: 4 hours Data output Via USB interface / RS-232C interface / SPC output
Storage:Internal memory: Measurement condition (10 sets)
Memory card (Option): 500 measurement conditions, 10,000 measured profiles, 500 display images, Text file (Measurement conditions / Measured profile / Assessed profile / Bearing area curve / Amplitude distribution curve), 500 statistical data, etc.
Dimensions (W x D x H)
Display unit: 10.8x4.3x7.8"(275x109 x198mm)
Height-tilt adjustment unit: 5.16x2.48x3.9"(131x63x99mm)
Drive unit: 5.04x1.41x1.83"(128x36x47mm)(SJ-411), 6.1x1.41x1.83"(155x36x47mm) (SJ-412)
Mass Control unit: Approx. 3.75lb (1.7kg)
Height-tilt adjustment unit: Approx. .9lb (0.4kg)
Drive unit: 1.3lb(0.6kg) (SJ-411), 1.5lb(0.7kg)(SJ-412)

Evaluation Capability

Applicable standards: JIS'82, JIS'94, JIS'01, ISO'97, ANSI, VDA, Free
Assessed profiles: P (primary profile), R (roughness profile), DF (DF profile), W (filtered waviness profile), roughness motif, waviness motif
Evaluation parameters: Ra, Rq, Rz, Ry, Rp, Rv, Rt, R3z, Rsk, Rku, Rc, RPc, RSm, Rmax(VDA, ANSI), Rz1max(ISO'97), S, HSC, RzJIS(JIS'01), Rppi, RΔa, RΔq, Rlr, Rmr, Rmr(c), Rδc, Rk, Rpk, Rvk, Mr1, Mr2, A1, A2, Vo, λq, Lo, Rpm, tp(ANSI), Htp(ANSI), R, Rx, AR, W, AW, Wx, Wte
Analysis graphs: Bearing Area Curve (BAC), Amplitude Distribution Curve (ADC)
Digital filter: 2CR, PC75, Gaussian
Cutoff length: λc: .003, .01, .03, .1, .3" (0.08, 0.25, 0.8, 2.5, 8mm)
λs: 100, 320, 1000µin (2.5, 8, 25µm)(Availability of switching depends of the selected standard.)
Sampling length: 0.08, 0.25, 0.8, 2.5, 8, 25*mm; or arbitrary length in range 0.1 to 25mm (0.1 to 50mm: SJ-412) in 0.01mm increments
Number of sampling lengths: 1, 2, 3, ~20 (limited by traverse range)
Printer: Thermal type
Printing width: 48mm (paper width: 58mm)
Recording magnification
Vertical magnification: 10X to 100,000X, Auto
Horizontal magnification: 1X to 1,000X, Auto
Function
Customize: Selection of display/evaluation parameter
Data compensation: R-surface, Tilt compensation
Ruler function: Step, level change, area and coordinate difference
D.A.T. function: Helps to level workpiece prior to skidless measurement displacement detection mode enables the stylus displacement to be input while the drive unit is stopped.
Statistical processing: Max. value, Min. value, Mean value, Standard deviation (s), Pass ratio, Histogram
GO/NG judgement: Maximum value rule, 16% rule, average value rule, standard deviation (1σ, 2σ, 3σ)
Calibration: Auto-calibration with the entry of numerical value /average calibration with multiple measurement (Max.12 times) is available.
Power saving function: Auto-sleep-function, Auto light-off of Backlight by ECO mode.

* Only for SJ-412

MiCAT
Mitutoyo Intelligent Computer Aided Technology
the standard in world metrology software
FORM

Free Communication Software

SJ-Tools

This program can be downloaded for FREE from the Mitutoyo website. http:www.mitutoyo.com

Output software based on Microsoft-Excel* for controlling the devices and reproducing and storing the measurement data.
*Microsoft-Excel is not included in the scope of supply.

Complete with exclusive accessories.

- Measurement device control
- Definition of measurement variables
- Graphic representation of the profile
- Storage of measurement results
- Documentation of measurement results

Optional cables (Required for software communication)
12AAD510: USB PC connecting cable (USB cable)
12AAA882: RS-232C connecting cable

Optional Accessories

178-611: Step gage (2µm, 10µm)
178-612: Step gage (2µm, 10µm, 79µin, 394µin)
178-610: Step gage (step: 1µm, 2µm, 5µm, 10µm)
12AAM556: Height/tilt adjustment unit for SJ-410
178-039: Manual column stand (granite base) (vertical travel: 250mm)
178-010: Auto-set unit for **178-039**
178-020: X axis adjustment unit for **178-039**
178-030: Tilting adjustment unit (Inclination adjustment unit) for **178-039**
12AAB358: Cylindrical surface adapter (workpiece dia.: 15 - 60mm)
178-016: Leveling table (tilting: ±1.5°, max. loading: 15kg)
178-048: Leveling table with D.A.T function (mm) (tilting: ±1.5°, max. loading: 15kg)
178-058: Leveling table with D.A.T function (inch) (tilting: ±1.5°, max. loading: 15kg)
178-043-1: XY leveling table (25 x 25mm) (tilting: ±1.5°, max. loading: 15kg, swiveling: ±3°)
178-053-1: XY leveling table (1" x 1") (tilting: ±1.5°, max. loading: 15kg, swiveling: ±3°)
178-042-1: Digital XY leveling table (25 x 25mm) (tilting: ±1.5°, max. loading: 15kg, swiveling: ±3°)
178-052-1: Digital XY leveling table (1" x 1") (tilting: ±1.5°, max. loading: 15kg, swiveling: ±3°)
178-049: Digital XY leveling table (25 x 25mm) (max. loading: 15kg)
178-059: Digimatic XY leveling table (1" x 1") (max. loading: 15kg)
178-019: Precision vise for XY leveling table (jaw opening: 36mm)
998291: Precision V-block for XY leveling table (workpiece dia.: 1 - 160mm)
12AAA841: Memory card (8GB)
965014: SPC cable (2m)
264-012-10: Input tool (USB type)
264-504-5A: DP-1VR
———: Detectors, Styli, and nosepieces (See pg. J-22/23.)

Consumables

12AAN040: LCD protective sheet (10 sheets/set)
12AAA876: Durable printer paper (25m, 5 rolls/set)
270732: Printer paper (5 pack)
12AAN046: Replacement battery
12AAJ088: Footswitch

Surftest SJ-410

SERIES 178 — Portable Surface Roughness Tester

DIMENSIONS

Unit: mm

Drive unit

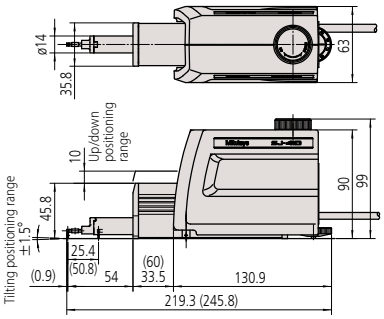

( ): Referring to dimensions when a 50mm drive is mounted to SJ-412.

Display unit

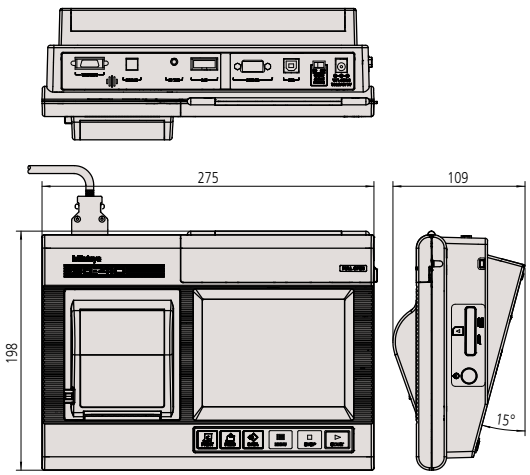

MEASUREMENT APPLICATIONS

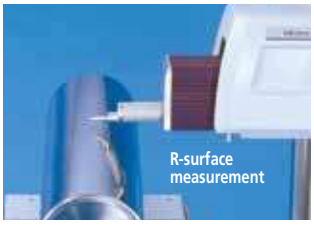

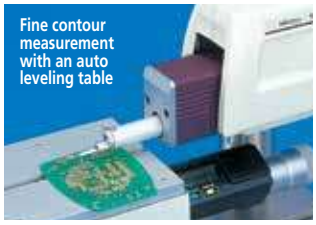



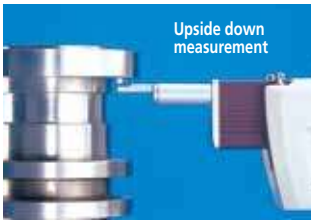





Carrying case is a standard accessory.



Manual column stand **178-039**

With optional accessories.

178-010: Auto-set unit
178-020: X-axis adjustment unit
178-030: Tilting adjustment unit

Mitutoyo

Surftest SJ-500/P, SV-2100

SERIES 178 — with Dedicated Control / PC System / Display Unit

High-precision and high-performance surface roughness tester with a dedicated control unit, achieving user-friendly display and simple operation.

FEATURES

- User-friendly display and simple operation equipped with a highly visible color 7.5-inch TFT LCD.
- Easy positioning. A joy stick built in the dedicated control unit allows easy and quick positioning. Fine positioning of a small stylus, required for measuring the inner side of a small hole, easily can be made using the manual knob.
- Easy setting of measuring conditions for surface roughness. Equipped with simple input function allows inputs according to drawing instruction symbols of ISO/JIS roughness standards. Troublesome measuring condition settings can be easily input by directly selecting a drawing instruction symbol for surface roughness from the menu.



SJ-500



SV-2100S4



SJ-500P

SURFPAK-EZ: Easy-to-use task-focused software

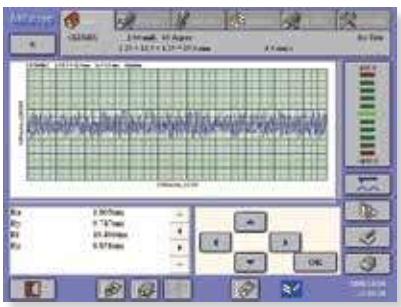

Measurement and results display screen

User-friendly graphical display and button layout allows intuitive operation. Simplified fine-contour analysis provided as standard, including step, area, angle, and circle calculation.

Technical Data: SJ-500

X-axis (drive unit)
- Measuring range: 1.97" (50mm)
- Resolution: 1.97µin (0.05µm)
- Measurement method: Linear encoder
- Drive speed: 0 - .78"/s (0 - 20mm/s)
- Measuring speed: .00078 - .2"/s (0.02 - 5mm/s)
- Traversing direction: Backward
- Traverse linearity: .0078µin/1.97" (0.2µm / 50mm)
- Positioning: ±1.5° (tilting, with DAT function)
  1.18" (30mm) (up/down)

Detector
- Resolution / Range: .4µin/32000µin, .04µin/3200µin, .004µin/320µin
  0.01µm (800µm), 0.001µm (80µm), 0.0001µm (8µm)
- Detecting method: Skidless / skid measurement
- Measuring force: 4mN (0.75mN) (low force type)
- Stylus tip: Diamond, 90° / 5µmR
  (60° / 2µmR: low force type)
- Skid radius of curvature: 1.57" (40mm)
- Detecting method: Differential inductance

Control unit
- Display: 7.5" color TFT with backlight
- Printer: Built-in thermal printer
- Magnification: Horizontal: X10 to X500,000, Auto
  Vertical: X0.5 to X10,000, Auto
- Drive unit control: Joystick operation with manual knob

Technical Data: SV-2100

X-axis (drive unit)
- Measuring range: 3.94" (100mm)
- Resolution: 1.97µin (0.05µm)
- Measurement method: Linear encoder
- Drive speed: 0 - 1.57"/s (0 - 40mm/s)
- Measuring speed: .00078 - .197"/s (0.02 - 5mm/s)
- Traversing direction: Pull
- Traverse linearity: 6µin/4" (0.15µm / 100mm)

Z2-axis (column)
- Type: Manual operation or power drive
- Vertical travel: 13.8" or 21.6" (350mm or 550mm*)
- Resolution*: 1µm
- Measurement method*: Rotary encoder
- Drive speed*: 0 - .78"/s (0 - 20mm/s)

*Only for power-drive type

Detector
- Resolution / Range : .4µin/32000µin, .04µin/3200µin, .004µin/320µin
  0.01µm / 800µm , 0.001µm / 80µm, 0.0001µm / 8µm
- Detecting method: Skidless / skid measurement
- Measuring force: 4mN or 0.75mN (low force type)
- Stylus tip: Diamond, 90° / 5µmR
  (60° / 2µmR: low force type)
- Skid radius of curvature: 1.57" (40mm)
- Detecting method: Differential inductance

Control unit
- Display: 7.5" color TFT with backlight
- Printer: Built-in thermal printer
- Magnification: Horizontal: X10 to X500,000, Auto
  Vertical: X0.5 to X10,000, Auto
- Drive unit control: Joystick operation with manual knob

Evaluation Capability

Cutoff length
ls: 0.25µm, 0.8µm, 2.5µm, 8µm, 25µm, 250µm, no filter
lc*: 0.025mm, 0.08mm, 0.25mm, 0.8mm, 2.5mm, 8mm, 25mm
lf: 0.08mm, 0.25mm, 0.8mm, 2.5mm, 8mm, 25mm, no filter

Sampling length (L)*
0.025mm, 0.08mm, 0.25mm, 0.8mm, 2.5mm, 8mm, 25mm, 80mm (SV-2100 only)

Data compensation functions
Parabola compensation, hyperbola compensation, ellipse compensation, R-plane (curved surface) compensation, conic compensation, tilt compensation

*Arbitrary length can be specified in the range from 0.02mm to 50mm.

12AAA876: High durable printer paper (5 Rolls/set)
270732: Standard type printer paper (5pcs.)

Surftest SJ-500/P, SV-2100

SERIES 178 — with Dedicated Control / PC System / Display Unit

SPECIFICATIONS

Model no.	SJ-500P	SJ-500	SV-2100M4	SV-2100S4	SV-2100H4	SV-2100W4
Type of Data processing	PC System	Dedicated Data Processor	Dedicated Data Processor			
Order No. (inch)	**178-531-02A**	**178-533-02A**	**178-637-01A**	**178-681-01A**	**178-683-01A**	**178-685-01A**
Measuring force of detector	4mN	4mN	0.75mN			
X-axis measuring range	2" (50mm)		4" (100mm)			
Vertical travel	Optional stand		13.8" (350mm) manual column	13.8" (350mm) power column	21.6" (550mm) power column	
Granite base size (WxD)	Optional stand		23.6 x 17.7" (600 x 450mm)			39.4 x 17.7" (1000 x 450mm)
PC I/F Unit	13.7 x 10.4 x 3.4" (350 x 263 x 86mm)	NA	NA	NA	NA	NA
Dimensions (main unit, WxDxH)	16.7 x 3.7 x 6.3" (425 x 94 x 160mm)		28.2 x 17.7 x 34" (716 x 450 x 863mm)	28.2 x 17.7 x 38" (716 x 450 x 966mm)	28.2 x 17.7 x 46" (716 x 450 x 1166mm)	44 x 17.7 x 46.3" (1116 x 450 x 1176mm)
Main unit Mass	5.9 lbs. (2.7 kg)		308.6 lbs. (140 kg)	308.6 lbs. (140 kg)	330 lbs. (150 kg)	485 lbs (220 kg)
Assessed profiles	Dedicated data processor type: P (primary profile), R (roughness profile), WC, envelope residual profile, roughness motif, waviness motif PC system type: P (primary profile), R (roughness profile), WC, WCA, WE, WEA, DIN4776 profile, E (envelope residual profile), roughness motif, waviness motif					
Evaluation parameters	Dedicated data processor type: Ra, Rc, Ry, Rz, Rq, Rt, Rmax, Rp, Rv, R3z, Sm, S, Pc, mr (c),δc, mr, tp, Htp, Lo, lr, Ppi, HSC, Δa, Δq, Ku, Sk, Rpk, Rvk, Rk, Mr1, Mr2, A1, A2, Vo, λa, λq, R, AR, Rx, W, AW, Wx, Wte, (43 parameters), Customization PC system type: Pa, Pq, Psk, Pku, Pp, Pv, Pz, Pt, Pc, PSm, PΔq, Pmr (c), Pmr, Pδc, Ra, Rq, Rsk, Rku, Rp, Rv, Rz, Rt, Rc, RSm, RΔq, Rmr (c), Rmr, Rδc, Wa, Wq, Wsk, Wku, Wp, Wv, Wz, Wt, Wc, WSm, WΔq, Wmr (c), Wmr, Wδc, Rk, Rpk, Rvk, Mr1, Mr2, A1, A2, Rx, AR, R, Wx, AW, W, Wte, Ry, RyDIN, RzDIN, R3y, R3z, S, HSC, Lo, lr, Δa, λa, λq, Vo, Htp, NR, NCRX, CPM, SR, SAR, NW, SW, SAW					
Analysis graphs	Dedicated data processor type: ADC, BAC, power spectrum graph PC system type: ADC, BAC Graph, power spectrum graph, auto-correlation graph, Walsh power spectrum graph, Walsh auto-correlation graph, slope distribution graph, local peak distribution graph, parameter distribution graph					
Curved surface compensation	Dedicated data processor type: Parabolic compensation, Hyperbolic compensation, Elliptical compensation, Circular compensation Conic compensation, Inclination (Entire, Arbitrary) PC system type: Parabolic compensation, Hyperbolic compensation, Elliptical compensation, Circular compensation, Conic compensation, Inclination (Entire, Arbitrary), Polynomial compensation					
Contour analysis	Dedicated data processor type: Area, Circle, Angle, Coordinate difference, Step, Inclination PC system type (SURFPAK-EZ): Area, Circle, Angle, Coordinate difference, Step, Inclination					
Filters	Dedicated data processor type: 2CR-75%, 2CRPC-75%, Gaussian, Robust-spline PC system type: 2CR-75%, 2CR-50%, 2CRPC-75%, 2CRPC-50%, Gaussian, Robust-spline					

Manual column stand options: 178-085 and 178-089 (for SJ-500)

Suitable for desktop use in inspection rooms and such.



No.178-085* Does not include measuring unit
Vertical adjustment range: 11.8" (300mm)
Dimension (W × D × H): 23.6" x 17.7" x 28"
(600 × 450 × 710mm)
Weight: 242 lbs (110kg)
No.178-089* Does not include measuring unit
Vertical adjustment range: 9.8" (250mm)
Dimension (W × D × H): 15.7 x 9.8 x 2.4"
(400 × 250 × 60mm)
Weight: 44 lbs (20kg)

Dimensions of SJ-500 w/ manual column stand **178-085**

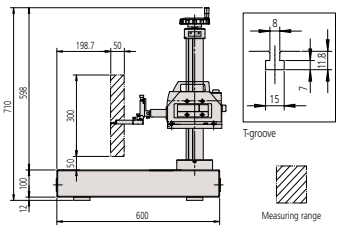

Unit: mm

Auto-leveling table: 178-081 (for SJ-500 / SV-2100M4), 178-083 (for SV-2100S4 / H4 / W4)

This is a stage that performs fully automatic leveling as measurement starts, freeing the user from this tedious operation. Fully automatic leveling can be done quickly by anyone. In addition, the operation is easy and reliable.

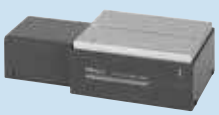

Inclination adjustment angle	±2°
Maximum load	15.4 lbs (7kg)
Table dimensions	5.12 x 3.94"(130x100mm)
Mass	7.7lbs (3.5kg)

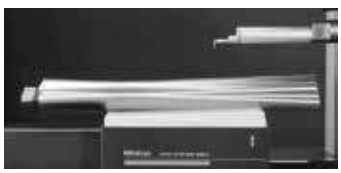

Mitutoyo

Surftest SV-3200

SERIES 178 — Surface Roughness Testers



SV-3200L4 (with options)

MiCAT
Mitutoyo Intelligent Computer Aided Technology
the standard in world metrology software
FORM



*Shown with optional accessories.

SV-3200H4 with PC

The Surftest SV-3200 Series provide high-accuracy, high-level analysis and multi-functionality in measurement of surface roughness.

FEATURES

- Mitutoyo's Surftest SV-3200 Series provides high-accuracy, high-level analysis and multi-functionality in three-dimensional analysis and measurement of fine contour, as well as the conventional type surface roughness measurement.
- Peripheral devices such as the auto-leveling table are available to enhance operability and to enable automatic measurement.
- FORMTRACEPAK V5, dedicated data-analyzing software, is installed. This software allows data management in a consistent format, from the work site to the laboratory.
- Ceramic, which is known for its superb anti-abrasive property, is used as the X-axis drive unit guide. No lubrication of the guide is required.
- High-accuracy glass scales are built-in on X-axis (resolution: 1.97µin (0.05µm) and Z2-axis (column, resolution: 39.4µin (1µm) to ensure high-accuracy positioning.

The SV-3200 series manifest high-reliability especially in the horizontal roughness parameters (S, Sm), that require high-accuracy of the X-axis travel.

- When equipped with high accuracy Y-axis table and 3D surface analysis software MCubeMap, this offers CNC type capabilities usually performed on Extreme series machines.
- Various optional detector holders such as Crank Rotary type and Manual Rotary type make this versatile for many different applications.
- New optional Digital Automatic Tilt (DAT) function is best suited for workpieces that are too large for leveling tables.

Technical Data

X-axis
- Measuring range: 4" or 8" (100mm or 200mm)
- Resolution: 1.97µin (0.05µm)
- Measurement method: Linear encoder
- Drive speed: 0 - 3.1"/s (0 - 80mm/s)
- Measuring speed: .00078 - .78"/s (0.2 - 20mm/s)**
- Traversing direction: Backward
- Traverse linearity: 4": (2+L)µin (0.05+0.001L)µm*
  8": 20µin / 8"(0.5µm/200mm)

Z2-axis (column)
- Vertical travel: 12", 20"or 27.6" (300mm, 500mm or 700mm) power drive
- Resolution: 39.4µin (1µm)
- Measurement method: ABSOLUTE linear encoder
- Drive speed: 0 - 1.2"/s (0 - 30mm/s)

Detector
- Range / resolution: 32000 µin / .4 µin, 3200µin / .04µin, 320 µin / .004µin (up to 96000 µin with an optional stylus) {(800µm / 0.01µm, 80µm / 0.001µm, 8µm / 0.0001µm) (up to 2400µm with an optional stylus)}
- Detecting method: Skidless / skid measurement
- Measuring force: 0.75mN (low force type)
- Stylus tip: Diamond, 60°/2µmR (low-force type)
- Skid radius of curvature: 1.57" (40mm)
- Detecting method: Differential inductance

Base size (W x H): 23.6 x 17.7" (600 x 450mm) or 39.4 x 17.7" (1000 x 450mm)

Base material: Granite

*L = Measured length inch (mm)
**Recommended speed: under 5mm/s
If using higher speed, stylus tip may be chipped and/or accuracy may be worse, depending on surface condition.

Evaluation Capability: FORMTRACEPAK V5

Assessed profiles
P (primary profile), R (roughness profile), WC, WCA, WE, WEA, DIN4776 profile, envelope residual profile, roughness motif, waviness motif

Evaluation parameters
Ra, Rq, Rz, Ry, Rz(JIS), Ry(DIN), Rc, Rp, Rpmax, Rpi, Rv, Rvmax, Rvi, Rt, Rti, R3z, R3zi, R3y, S, Pc (Ppi), Sm, HSC, mr, δc, plateau ratio, mrd, Rk, Rpk, Rvk, Mr1, Mr2, Δa, Δq, λa, λq, Sk, Ku, Lo, Lr, A1, A2
Roughness motif parameters: Rx, R, AR, SR, SAR, NR, NCRX, CPM
Waviness motif parameters: Wte, Wx, W, AW SW, SAW, NW

Analysis graphs
ADC, BAC1, BAC2, power spectrum chart, auto-correlation chart, Walsh power spectrum chart, Walsh auto-correlation chart, slope distribution chart, local peak distribution chart, parameter distribution chart

Digital filter 2CR-75%, 2CR-50%, 2CR-75% (phase corrected), 2CR-50% (phase corrected), Gaussian-50%

Cutoff length*
λc: .001, .003, .01, .03, .1, .3, 1"
(0.025mm, 0.08mm, 0.25mm, 0.8mm, 2.5mm, 8mm, 25mm)
fl: .001, .003, .01, .03, .1, .3, 1"
(0.08mm, 0.25mm, 0.8mm, 2.5mm, 8mm, 25mm)
fh: .001, .003, .01, .03, .1, .3, 1"
(0.08mm, 0.25mm, 0.8mm, 2.5mm, 8mm)

Sampling length (L)*.001, .003, .01, .03, .1, .3, 1"
(0.025mm, 0.08mm, 0.25mm, 0.8mm, 2.5mm, 8mm, 25mm)

Data compensation functions
Tilt compensation, R-plane (curved surface) compensation, ellipse compensation, parabola compensation, hyperbola compensation, quadric curve automatic compensation, polynomial compensation, polynomial automatic compensation

*Arbitrary length can be specified in the range from .001" (0.025mm) to the maximum traverse length.

Surftest SV-3200

SERIES 178 — Surface Roughness Testers

SPECIFICATIONS

Models without X-axis inclination function

Model No.	SV-3200S4	SV-3200H4	SV-3200W4	SV-3200L4
Order No. (inch)	**178-424-11A**	**178-425-11A**	**178-426-11A**	**178-464-11A**
Order No. (inch)	**178-444-11A**	**178-445-11A**	**178-446-11A**	**178-484-11A**
Measuring force of detector	0.75mN	0.75mN	0.75mN	0.75mN
X-axis measuring range	4" (100mm)	4" (100mm)	4" (100mm)	4" (100mm)
Vertical travel	12" (300mm) power column	20" (500mm) power column	20" (500mm) power column	27.6" (700mm) power column
Granite base size (WxD)	23.6 x 17.7" (600 x 450mm)	23.6 x 17.7" (600 x 450mm)	39.4 x 17.7" (1000 x 450mm)	39.4 x 17.7" (1000 x 450mm)
Dimensions (main unit, WxDxH)	29.8 x 19.0 x 38.0" (756 x 482 x 966mm)	29.8 x 19.0 x 45.9" (756 x 482 x 1166mm)	45.5 x 19.0 x 46.3" (1156 x 482 x 1176mm)	45.5 x 19.0 x 56.5" (1156 x 482 x 1436mm)
Mass (main unit)	308 lbs (140kg)	330 lbs (150kg)	485 lbs (220kg)	595 lbs (270kg)

Model No.	SV-3200S8	SV-3200H8	SV-3200W8	SV-3200L8
Order No. (inch)	**178-427-11A**	**178-428-11A**	**178-429-11A**	**178-465-11A**
Order No. (inch)	**178-447-11A**	**178-448-11A**	**178-449-11A**	**178-485-11A**
Measuring force of detector	0.75mN	0.75mN	0.75mN	0.75mN
X-axis measuring range	8" (200mm)	8" (200mm)	8" (200mm)	8" (200mm)
Vertical travel	12" (300mm) power column	20"(500mm) power column	20" (500mm) power column	27.6" (700mm) power column
Granite base size (WxD)	23.6 x 17.7" (600 x 450mm)	23.6 x 17.7" (600 x 450mm)	39.4 x 17.7"(1000 x 450mm)	39.4 x 17.7"(1000 x 450mm)
Dimensions (main unit, WxDxH)	30.2 x 19.0 x 38.0" (766 x 482 x 966mm)	30.2 x 19.0 x 45.9" (766 x 482 x 1166mm)	45.9 x 19.0 x 46.3" (1166 x 482 x 1176mm)	45.5 x 19.0 x 56.5" (1156 x 482 x 1436mm)
Mass (main unit)	308 lbs (140kg)	330 lbs (150kg)	485 lbs (220kg)	595 lbs (270kg)

Optional Accessories

178-602-1: Reference Specimen (Supports ISO)

178-611: Reference Step Specimen (2µm, 10µm)
178-612: Reference Step Specimen (2µm, 10µm, 79µin, 394µin)
178-610: Step gage (1µm, 2µm, 5µm, 10µm)
178-047: Three-axis adjustment table (including 998291 precision V-block.)
178-016: Leveling table
178-042-1: Digimatic XY leveling table (25 x 25mm)
178-052-1: Digimatic XY leveling table (1 x 1")
178-043-1: XY leveling table (25 x 25mm)
178-053-1: XY leveling table (1 x 1")
178-019: Precision vise*
998291: Precision V-block*
181-902-10: V-block set with clamp (Max. workpiece dia.: 25mm)
181-901-10: V-block set with clamp (Max. workpiece dia.: 1")

(See page J-22/23.) Detectors, styli, and nosepieces
*Use with an XY leveling table

Optional Accessories

A wide range of peripherals are available to support various challenging measurement needs.



Y-axis Table
178-097 for multiple workpiece measurement
178-096 for 3D measurement
*Not a measuring axis, only for positioning.



3D-Auto Leveling Table
178-077
*Used together with **178-096**



Digital Advanced Tilting Unit
178-040
*Contact Sales Rep for details. Recommend to be installed in manufacturer's facility.

(See page J-25 for more accessories.)



178-071 (S-3000)
Standard Detector Holder



178-075 (S-3000CR)
Crank Rotary Type Detector Holder



178-074 (S-3000C)
Crank Type Detector Holder



178-076 (S-3000MR)
Manual Rotary Type Detector Holder

Mitutoyo

Surftest Extreme SV-3000CNC

SERIES 178 — CNC Surface Measuring Instruments

FEATURES

- High-accuracy CNC surface roughness measuring instrument allows surface roughness measurement in both axes.
- Each axes has the maximum drive speed of 200 mm/s, which permits high-speed positioning that may result in a large increase in the throughput of multiple-profile/multiple-workpiece measurement tasks.
- For models with the α-axis, it is possible to perform continuous measurement over horizontal and inclined surfaces by power-tilting the drive unit.
- For models with the Y-axis table, it is possible to expand the measuring range for multiple workpieces, etc., through positioning in the Y-axis direction.
- Using optional rotary table θ1 and θ2 designed to use with the CNC models enables it to expand the CNC measurement application range.
- Inclined plane measurements is possible through 2-axis simultaneous control in the X- and Y-axis directions.
- Since the detector unit incorporates an anti-collision safety device, the detector unit will automatically stop even if its main body collides with a workpiece or fixture.
- Supplied with an easy-to-operate Remote Box. The user can make any movement by selecting the required axis using the two joysticks. The current axis selection is easily identified by the icon on the key top.
- Communication with the data processing/ analysis section is via USB.



SV-3000CNC w/ PC system and software
PC stand is not included, isolation stand is optional

SPECIFICATIONS

Model No.	SV-3000CNC		SV-3000CNC		SV-3000CNC		SV-3000CNC	
Order No. (100V - 120V)	**178-521-1**	**178-541-1**	**178-522-1**	**178-542-1**	**178-523-1**	**178-543-1**	**178-524-1**	**178-544-1**
X1-axis measuring range	8" (200mm)	8" (200mm)	8" (200mm)	8" (200mm)	8" (200mm)	8" (200mm)	8" (200mm)	8" (200mm)
Z2-axis vertical travel	12" (300mm)	20" (500mm)	12" (300mm)	20" (500mm)	12" (300mm)	20" (500mm)	12" (300mm)	20" (500mm)
Y-axis table unit	—	—	—	—	Installed	Installed	Installed	Installed
α-axis unit	—	—	Installed	Installed	—	—	Installed	Installed

Technical Data: SV-3000CNC

X1-axis
- Measuring range: 8" (200mm)
- Resolution: 1.97µin (0.05µm)
- Measurement method: Reflective-type linear encoder
- Drive speed: 7.87"/s (200mm/s) (CNC, max.)
  0 - 2.4"/s (0 - 60mm/s) (joystick)
- Measuring speed: .00078 - .078"/s (0.02 - 2mm/s)
- Traversing direction: Backward
- Traverse linearity: 20 µin/8" (0.5µm/200mm)

α-axis**
- Inclination angle: -45° to +10°
- Resolution: 0.000225°
- Rotating speed: 1rpm

Z2-axis (column)
- Vertical travel: 12" (300mm) 20"*(500mm)
- Resolution: 1.97µin (0.05µm)
- Measurement method: Reflective-type linear encoder
- Drive speed: 7.87"/s (200mm/s) (max., CNC)
  0 - 2.4"/s (0 - 60mm/s) (joystick)
- Base size (W x H): 29.5 x 23.6" (750 x 600mm)
- Base material: Granite

Detector
- Range / resolution: 32000 µin / .4 µin, 3200µin / .04µin,
  320 µin / .004µin
  (up to 96,000 µin with an optional stylus)
  {(800µm / 0.01µm, 80µm / 0.001µm,
  8µm / 0.0001µm)
  (up to 2400µm with an optional stylus)}
- Measuring force: 4mN (0.75mN) (low-force type)
- Stylus tip: Diamond, 90°/5µmR
  (60°/2µmR: low-force type)

Dimension (W x D x H): 31.5 x 24.4 x 39.4"
(800 x 620 x 1000mm)
31.5 x 24.4 x 47.2"
(800 x 620 x 1200mm)*

Mass 529 lbs (240kg) 551lbs (250kg)*
*High-column model

Y-axis table unit**
- Measuring range: 8" (200mm)
- Minimum reading : 1.97µin (0.05µm)
- Scale unit: Reflective-type Linear Encoder
- Drive speed: 7.87"/s (200mm/s) (max., CNC)
  0 - 2.4"/s (0 - 60mm/s) (joystick)

Maximum loading capacity: 44 lbs (20kg)
Traverse linearity 20µin/8" (0.5µm/200mm)
Linear displacement accuracy (at 20°C):
± (80+2L/4)µin {± (2+2L/100) µm}
L: Dimension between two measured points (mm)
- Table size: 7.87 x 7.87" (200 x 200mm)
- Dimensions (W x D x H): 12.6 x 25.4 x 4.1"
  (320 x 646 x 105mm)
- Mass: 77 lbs (35kg)

**Y-axis table included only as a factory installed option.

Optional Accessories

Vibration isolation stand
Vibration isolation mechanism: Diaphragm air spring
- Natural frequency : 2.5 - 3.5Hz
- Damping mechanism: Orifice
- Leveling mechanism: Automatic control with mechanical valves
- Air supply pressure: 0.4MPa

Allowable loading capacity: 772 lbs (350kg)
- Dimensions (W x D x H): 39.4 x 35.2 x 28.1"
  (1000 x 895 x 715mm)
- Mass: 617 lbs (280kg)

Surftest Extreme SV-M3000CNC

SERIES 178 — CNC Surface Measuring Instruments

Technical Data: SV-M3000CNC

X1-axis
- Measuring range: 8" (200mm)
- Resolution: 1.97µin (0.05µm)
- Measurement method: Reflective-type linear encoder
- Drive speed: 7.87"/s (200mm/s) (max., CNC)
  0 - 1.97"/s (0 - 50mm/s) (joystick)
- Measuring speed: .00078 - .08"/s (0.02 - 2mm/s)
- Traverse linearity: 20µin/8" (0.5µm/200mm)
  28µin/8" (0.7µm/200mm) (long-type detector)
  20µin/8" (0.5µm/200mm) (rotary-type detector, up/down direction)
  28µin/8" (0.7µm/200mm) (long-type detector, foward/backward direction)

α-axis
- Inclination angle: -45° to +10°
- Resolution: 0.000225°
- Rotating speed: 1rpm

Z2-axis (column)
- Vertical travel: 20"(500mm)
- Resolution: 1.97µin (0.05µm)
- Measurement method: Reflective-type linear encoder
- Drive speed: 7.87"/s (200mm/s) (CNC, max.)
  0 - 1.97"/s (0 - 50mm/s) (joystick)

Y-axis
- Measuring range: 32" (800mm)
- Resolution: 1.97µin (0.05µm)
- Measurement method: Reflective-type linear encoder
- Drive speed: 7.87"/s (200mm/s) (max., CNC)
  0 - 1.97"/s (0 - 50mm/s) (joystick)
- Measuring speed: .00078- .08"/s (0.02 - 2mm/s)
- Traverse linearity: 20µin/2" (0.5µm/50mm), 80µin/32" (2µm/800mm) 28µin/2" (0.7µm/50mm), 120µin/32" (3µm/800mm) (long-type detector) 28µin/2" (0.7µm/50mm), 120µin/32" (3µm/800mm) (rotary-type detector, up/down direction)

Base unit
- Size (W x H): 23.6 x 59.1" (600 x 1500mm)
- Material: Steel
- Loading capacity: 661 lbs (300kg)

Detector
- Range / resolution: 32000 µin / .4 µin, 3200µin / .04µin, 320 µin / .004µin (up to 96,000 µin with an optional stylus) {800µm / 0.01µm, 80µm / 0.001µm, 8µm / 0.0001µm (up to 2400µm with an optional stylus)}
- Detecting method: Skidless / skid measurement
- Measuring force: 4mN or 0.75mN (low-force type)
- Stylus tip: Diamond, 90°/5µmR (60°/2µmR: low-force type)
- Skid radius of curvature: 1.57" (40mm)
- Detecting method: Differential inductance

Dimension (W x D x H): 42.7 x 66.7 x 75.7" (1085 x 1695 x 1922mm)

Mass: 3527 lbs (1600Kg) (including vibration isolating unit)

MiCAT
Mitutoyo Intelligent Computer Aided Technology
the standard in world metrology software
FORM

Software

FORMTRACEPAK V5

Enables control of the optional motor-driven Y-axis table and rotary table for realizing efficient measurement automation. You can also perform contour evaluation that allows free analysis of level differences, angle, pitch, area and other characteristics based on surface roughness data. In addition, analysis results can be saved in the "html","mhtml" or pdf format which allows Internet Explorer or MS-Word compatibility, allowing PC without layout editing programs to view analysis results.



Contour Measurement & Surface Roughness Measurement Screen



Report Layout Screen



SV-M3000CNC with personal computer system and software

* PC stand not included

FEATURES

- CNC Surface Roughness Tester covers measurement of large/heavy workpieces such as engine blocks, crankshafts, etc.
- In combination with the surface roughness detector rotating unit, S-3000AR (optional), it can perform continuous measurement over the bottom, top and side surfaces of a workpiece.
- Compatible with the optional large table for supporting a load of 220 lbs (100 kg) or a large θ2 table. Enables continuous automatic measurement of large-size workpieces.
- Suitable for automatic surface roughness measurement on large and heavy workpieces.
- Employs the column-moving type configuration that is not restricted by workpiece size. This is advantageous for measuring heavy workpieces, such as engine blocks, crankshafts, etc.
- Provides 31.5" (800mm) of Y-axis stroke. This makes it possible to measure multiple profiles on large workpieces.
- Load table has a self-contained structure to ensure that various size workpieces, jigs, auto-feed devices, etc., are easily accommodated and can be specified, if required, by special order.

SPECIFICATIONS

Model No.	SV-M3000CNC
Order No. (100V - 120V)	**178-549-1**
X1-axis measuring range	8" (200mm)
Z2-axis column travel range	20" (500mm)
Y-axis travel range	32" (800mm)
α-axis inclination angle	-45° (CCW), +10° (CW)

Mitutoyo

Formtracer SV-C3200 / SV-C4500

SERIES 525 — Surface Roughness / Contour Measuring System



SV-C3200L4 (with options)

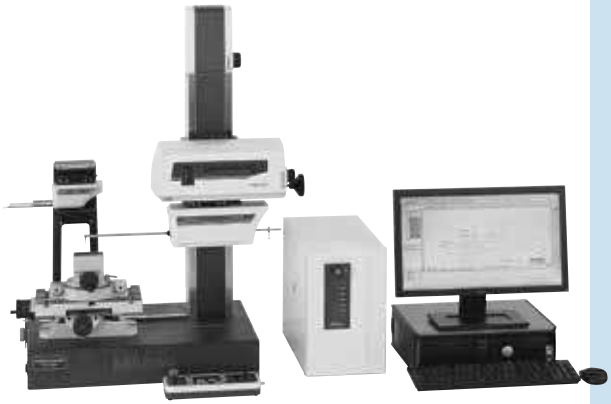

SV-C3200S4 with personal computer system and software

FEATURES

- Dramatically increased drive speed (X axis: 3.1"/s (80mm/s), Z2 axis column: 1.2"/s (30mm/s) further reduces total measurement time.
- In order to maintain the traverse linearity specification for an extended period of time, Mitutoyo has adopted highly rigid ceramic guides that combine the characteristics of smallest secular change and remarkable resistance to abrasion.
- The drive unit (X-axis) and column (Z2-axis) are equipped with a high-accuracy linear encoder (ABS type on Z2-axis). This improves reproducibility of continuous automatic measurement of small holes in the vertical direction and repeated measurement of parts which are difficult to position.

Automatic Measurement

- A wide range of optional peripherals are available to support quick and easy CNC operation.

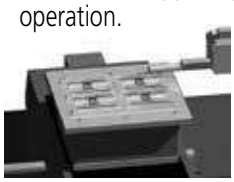

Y-axis Table



Rotary Table θ1



Rotary Table θ2

Surface Roughness Measurement



- Traverse linearity: (2+1L)µin (±(0.05+0.001L) µm*)
  Designed to handle workpieces calling for high accuracy.
  *S4, H4, W4 types, L = Drive length inch (mm)
- Compliant with JIS '82/'94/'01, ISO, ANSI, DIN, VDA, and other international surface roughness standards.
- Equipped with a standard high accuracy detector (0.75mN/4mN measuring force) providing a resolution down to 0.004µin (0.0001µm).

Contour Drive Measurement



- X axis accuracy: ± (31.5+10L)µin (±(0.8+0.01L)µm*)
  Z1-axis accuracy: ± (31.5+l20Hl)µin (±(0.8+l2Hl/100)µm*)
  Designed to handle workpieces calling for high accuracy.
  * SV-C4500S4, H4, W4 types, L = Drive length, H = Measurement height inch (mm)
- The contour drive unit of SV-C4500 series instruments can continuously measure in the upward and downward directions without the need to change the arm orientation or reset the workpiece, when combined with the double cone-end stylus (a new product with contact points in the upward and downward directions).

Technical Data: Common

Power supply: 100 – 240VAC ±10%, 50/60Hz
Power consumption: 400W (main unit only)

Technical Data: Contour Measurement

X-axis
- Measuring range: 4" (100mm) or 8" (200mm)
- Resolution: 1.97µin (0.05µm)
- Measurement method: Reflective-type linear encoder
- Drive speed: 3.1"/s (80mm/s) and manual
- Measuring speed: .00078 - .78"/s (0.02 - 20mm/s)*

*Recommended speed: under 5mm/s
If using higher speed, stylus tip may be chipped and/or accuracy may be worse, depending on surface condition.

- Measuring direction: Forward/backward
- Traverse linearity: 32µin/4"(0.8µm/100mm)
  79µin/8" (2µm/200mm)
  *with the X axis in horizontal orientation
- Linear displacement: ±(32+10L)µin (±0.8+0.01L) µm (SV-C3200S4, H4, W4)
- accuracy (at 20°C) ±(32+10L)µin (±0.8+0.01L)µm (SV-C4500S4, H4, W4)
  ±(32+20L)µin (±0.8+0.02L)µm (SV-C3200S8, H8, W8)
  ±(32+20L)µin (±0.8+0.02L)µm SV-C4500S8, H8, W8)
  * L = Drive length inch (mm)
- Inclination range: ±45°

Z2-axis (column)
- Vertical travel: 12"(300mm) or 20"(500mm)
- Resolution: 39.4µin (1µm)
- Measurement method: ABSOLUTE linear encoder
- Drive speed: 0 - 1.2"/s (0 - 30mm/s) and manual

Z1-axis (detector unit)
- Measuring range: ±1.2" (±30mm)
- Resolution: 1.57µin (0.04µm) (SV-C3200 series), .78µin (0.02µm) (SV-C4500 series)
- Measurement method: Linear encoder (SV-C3200 series), Laser hologage (SV-C4500 series)
- Linear displacement: ±(63+l20lH) µin (±(1.4+l2Hl/100)µm) (SV-C3200 series)
- accuracy (at 20°C) ±(31.5+l20Hl) µin (±(0.8+l2Hl/100)µm) (SV-C4500 series)
  *H: Measurement height from the horizontal position (mm)
- Stylus up/down operation: Arc movement
- Face of stylus: Upward/downward (SV-C3200)
  Upward/downward (Direction switch by Formtracepak) (SV-C4500)
- Measuring force: 30mN (SV-C3200)
  10, 20, 30, 40, 50mN (SV-C4500)
  * As for SV-C4500, set the measurement force with Formtracepak.
- Traceable angle: Ascent: 77°, descent: 83°
  (using the standard stylus provided and depending on the surface roughness)

Stylus tip: Radius: 25µm, carbide tip

Technical Data: Surface Roughness Measurement

X1-axis
- Measuring range: 4" (100mm) or 8" (200mm)
- Resolution: 1.97µin (0.05µm)
- Measurement method: Linear encoder
- Drive speed: 3.1"/s (80mm/s)
- Traversing direction: Backward
- Traverse linearity: (2+1L) µin (0.05+1L/1000)µm (S4, H4, W4 types)
  20µin/8"(0.5µm/200mm) (S8, H8, W8 types)

Z2-axis (column)
- Vertical travel: 12" (300mm) or 20" (500mm)
- Resolution: 39.4 µin (1µm)
- Measurement method: ABSOLUTE linear encoder
- Drive speed: 0 - 1.2"/s (0 - 30mm/s) and manual

Detector
- Range / resolution: 32000 µin / .4 µin, 3200µin / .04µin, 320 µin / .004µin (up to 96000 µin with an optional stylus) {800µm / 0.01µm, 80µm / 0.001µm, 8µm / 0.0001µm (up to 2400µm with an optional stylus)}
- Detecting method: Skidless / skid measurement
- Measuring force: 0.75mN (low force type)
- Stylus tip: Diamond 60°/2µmR (low force type)
- Skid radius of curvature: 1.57" (40mm)
- Detecting method: Differential inductance

Formtracer SV-C3200 / SV-C4500

SERIES 525 — Surface Roughness / Contour Measuring System

SPECIFICATIONS

Model No.	SV-C3200S4	SV-C3200H4	SV-C3200W4	SV-C3200L4
Order No. (inch)	**525-491-11A**	**525-492-11A**	**525-493-11A**	**525-494-11A**
Model No.	SV-C4500S4	SV-C4500H4	SV-C4500W4	SV-C4500L4
Order No. (inch)	**525-451-11A**	**525-452-11A**	**525-453-11A**	**525-454-11A**
X1-axis measuring range	4" (100mm)	4" (100mm)	4" (100mm)	4" (100mm)
Measuring force of detector	0.75mN	0.75mN	0.75mN	0.75mN
Vertical travel	12" (300mm) power column	20" (500mm) power column	20" (500mm) power column	27.6" (700mm) power column
Granite base size (WxD)	23.6 x 17.7" (600 x 450mm)	23.6 x 17.7" (600 x 450mm)	39.4 x 17.7" (1000 x 450mm)	39.4 x 17.7" (1000 x 450mm)
Dimensions (main unit, WxDxH)	39.2 x 22.6 x 38.0" (996 x 575 x 966mm)	39.2 x 22.6 x 46.3" (996 x 575 x 1176mm)	55.4 x 22.6 x 46.3" (1396 x 575 x 1176mm)	55.4 x 22.6 x 56.1" (1396 x 575 x 1426mm)
Mass (main unit)	308 lbs (140kg)	330 lbs (150kg)	485 lbs (220kg)	595 lbs (270kg)

Model No.	SV-C3200S8	SV-C3200H8	SV-C3200W8	SV-C3200WL8
Order No. (inch)	**525-496-11A**	**525-497-11A**	**525-498-11A**	**525-499-11A**
Model No.	SV-C4500S8	SV-C4500H8	SV-C4500W8	SV-C4500L8
Order No. (inch)	**525-456-11A**	**525-457-11A**	**525-458-11A**	**525-459-11A**
X1-axis measuring range	8" (200mm)	8" (200mm)	8" (200mm)	4" (100mm)
Measuring force of detector	0.75mN	0.75mN	0.75mN	0.75mN
Vertical travel	12" (300mm) power column	20" (500mm) power column	20" (500mm) power column	27.6" (700mm) power column
Granite base size (WxD)	23.6 x 17.7" (600 x 450mm)	23.6 x 17.7" (600 x 450mm)	39.4 x 17.7" (1000 x 450mm)	39.4 x 17.7" (1000 x 450mm)
Dimensions (main unit, WxDxH)	39.6 x 22.6 x 38.0" (1006 x 575 x 966mm)	39.6 x 22.6 x 46.3" (1006 x 575 x 1176mm)	55.4 x 22.6 x 46.3" (1406 x 575 x 1176mm)	55.4 x 22.6 x 56.1" (1396 x 575 x 1426mm)
Mass (main unit)	308 lbs (140kg)	330 lbs (150kg)	485 lbs (220kg)	595 lbs (270kg)

MiCAT
Mitutoyo Intelligent Computer Aided Technology
the standard in world metrology software
FORM

Software

FORMTRACEPAK V5

Enables control of the optional motor-driven Y-axis table and rotary table for realizing efficient measurement automation. You can also perform contour evaluation that allows free analysis of level differences, angle, pitch, area and other characteristics based on surface roughness data. In addition, analysis results can be saved in the "html", "mhtml" or pdf format which allows Internet Explorer or MS-Word compatibility, allowing PC without layout editing programs to view analysis results.



Contour Measurement Screen

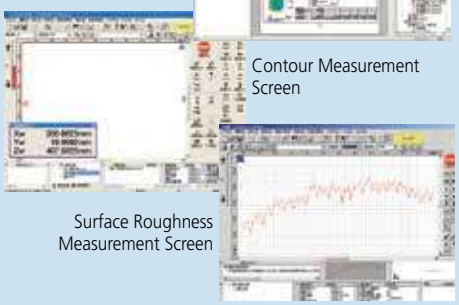

Surface Roughness Measurement Screen

Optional Accessories

A wide range of peripherals are available to support various challenging measurement needs.



Y-axis Table
178-097 for multiple workpiece measurement
178-096 for 3D measurement
*Not a measuring axis, only for positioning.



3D-Auto Leveling Table
178-077
*Used together with **178-096**

(See page J-25 for more accessories.)



178-071 (S-3000)
Standard Detector Holder



178-091 (S-3000CR)
Crank Rotary Type Detector Holder



178-074 (S-3000C)
Crank Type Detector Holder



178-092 (S-3000MR)
Manual Rotary Type Detector Holder

Mitutoyo

Formtracer Extreme SV-C4500CNC

SERIES 525 — Surface Roughness/Form Measuring Instrument





SV-C4500CNC with recommended machine vibration stand

* PC stand not included

Surface roughness detector



Contour Z-axis detector



FEATURES

- High-accuracy CNC surface roughness/form measuring instrument allows both measurement of surface roughness and form/contour with one unit.
- Each axes has the maximum drive speed of 7.87"/s (200 mm/s), which permits high-speed positioning that may result in a large increase in the throughput of multiple-profile/multiple-workpiece measurement tasks.
- For models with the α axis, it is possible to perform continuous measurement over horizontal and inclined surfaces by power-tilting the detector unit.
- For models with the Y-axis table, it is possible to expand the measuring range for multiple workpieces, etc., through positioning in the Y-axis direction.
- When combined with the double cone-end stylus (a new product with diametrically opposed contact points), the instrument can continuously measure in the upward and downward directions without the need to change the arm orientation or reset the workpiece fixturing.
- The measuring force can be switched among five levels (upward and downward) from the data-processing program (Formtracepak).
- Enables inclined plane measurements through 2-axis simultaneous control in the X- and Y-axis directions.
- When the detector for form/contour measurement is replaced with that for surface roughness measurement, or vice versa, it is a simple, one-touch replacement without re-routing of the connecting cables.
- Since the Z1-axis detector incorporates an anti-collision safety device, the detector unit will automatically stop even if its main body collides with a workpiece or fixture.
- Supplied with an easy-to-operate Remote Box. The user can make any movement by selecting the required axis using the two joysticks. The current axis selection is easily identified by the icon on the key top.
- Communication with the Data Processing/Analysis section is via USB.

Technical Data: Common

Base size (W x H):	31 x 39.4" (800 x 1000mm) Type S 34 x 47.2" (800 x 1200mm) Type H
Base material:	Granite
Mass:	529 lbs (240kg) Type S 551 lbs (250kg) Type H
Power supply:	100 – 120VAC ±10%, 50/60Hz
Power consumption:	500W (main unit only)

Technical Data: Contour Measurement

X1-axis

Measuring range:	8" (200mm)
Resolution:	1.97µin (0.05µm)
Measurement method:	Reflective-type linear encoder
Drive speed:	7.87"/s (200mm/s) (max., CNC) 0 - 2"/s (0 - 50mm/s) (joystick)
Measuring speed:	.00078 - .08"/s (0.02 - 2mm/s)
Measuring direction:	Forward / Backward
Traverse linearity:	80µin / 8"(2µm/200mm) *with the X axis in horizontal orientation
Linear displacement accuracy (at 20°C):	±(0.8+4L/200)mm * L = Drive length (mm)

α-axis* Depends on Code #

Inclination angle:	-45° to +10°
Resolution:	0.000225°
Rotating speed:	1rpm

Z2-axis (column)

Vertical travel:	12" or 20" (300mm or 500mm)
Resolution:	1.97µin (0.05µm)
Measurement method:	Reflective-type linear encoder
Drive speed:	7.87"/s (200mm/s) (max., CNC) 0 - 2."/s (0 - 50mm/s) (joystick)

Z1-axis (detector unit)

Measuring range:	±1.2" (±30mm)
Resolution:	.787µin (0.02µm)
Measurement method:	Reflective Type detector unit
Linear displacement:	
Accuracy (at 20°C)	±(32+110H)µin (±(0.8+I2HI/100)µm) *H: Measurement height from the horizontal position (mm) w/o α-axis: ±(1.5+10HI/1000)µm
Stylus up/down operation:	Arc movement
Face of stylus:	Downward
Measuring force:	10, 20, 30, 40, 50mN
Traceable angle:	Ascent: 70°, descent: 70° (using the standard stylus provided and depending on the surface roughness)
Stylus tip	Radius: 25µm, carbide tip

Technical Data: Surface Roughness Measurement

X1-axis

Measuring range:	8" (200mm)
Resolution:	1.97µin (0.05µm)
Measurement method:	Reflective-type linear encoder
Drive speed:	7.87"/s (200mm/s) (max., CNC) 0 - 2"/s (0 - 50mm/s) (joystick)
Measuring speed:	.00078 - .08"/s (0.02 - 2mm/s)
Traversing direction:	Pulling
Traverse linearity:	20µin/8" (0.5µm/200mm)

α-axis* Depends on Code #

Inclination angle:	-45° to +10°
Resolution:	0.000225°
Rotating speed:	1rpm

Z2-axis (column)

Vertical travel:	12" or 20" (300mm or 500mm)
Resolution:	1.97µin (0.05µm)
Measurement method:	Reflective-type linear encoder
Drive speed:	7.87"/s (200mm/s) (max., CNC) 0 - 2"/s (0 - 50mm/s) (joystick)

Detector (optional)

Range / resolution:	32000 µin / .4 µin, 3200µin / .04µin, 320 µin / .004µin (up to 96000 µin with an optional stylus) {800µm / 0.01µm, 80µm / 0.001µm, 8µm / 0.0001µm (up to 2400µm with an optional stylus)}
Detecting method:	Skidless / skid measurement
Measuring force:	0.75mN
Stylus tip:	60°/2µmR
Skid radius of curvature:	1.57" (40mm)
Detecting method:	Differential inductance

Formtracer Extreme SV-C4500CNC

SERIES 525 — Surface Roughness/Form Measuring Instrument

Y-axis table unit**

Measuring range: 8" (200mm)
Minimum reading : 1.97µin (0.05µm)
Scale unit: Reflective-type linear encoder
Drive speed: 200mm/s (max., CNC)
0 - 2"/s (0 - 50mm/s) (joystick)
Maximum loading capacity: 44 lbs (20kg)
Traverse linearity 20µin/8" (0.5µm/200mm) Surface roughness
80µin/8" (2µm/200mm) contour
Linear displacement accuracy (at 20°C):
± (80+20L)µin{± (2+2L/100) µm}
contour mode
L: Dimension between two measured points (mm)
Table size: 7.8 x 7.8"(200 x 200mm)
Dimensions (W x D x H): 2.6 x 25.4 x 4.1"
(320 x 646 x 105mm)
Mass: 77 lbs (35kg)

**Y-axis table included only as a factory installed option.

Optional Accessories

Machine vibration stand: 12AAE032

Vibration isolation mechanism: Diaphragm air spring
Natural frequency : 2.5 - 3.5Hz
Damping mechanism: Orifice
Leveling mechanism: Automatic control with mechanical valves
Air supply pressure: 0.4Mpa
Allowable loading capacity: 772 lbs (350kg)
Dimensions (W x D x H): 39.4 x 35.2 x 28.1"
(1000 x 895 x 715mm)
Mass: 617 lbs (280kg)

MiCAT
Mitutoyo Intelligent Computer Aided Technology
the standard in world metrology software
FORM

Software

FORMTRACEPAK V5

Enables control of the optional motor-driven Y-axis table and rotary table for realizing efficient measurement automation. You can also perform contour evaluation that allows free analysis of level differences, angle, pitch, area and other characteristics based on surface roughness data. In addition, analysis results can be saved in the "html", "mhtml" or pdf format which allows Internet Explorer or MS-Word compatibility, allowing PC without layout editing programs to view analysis results.

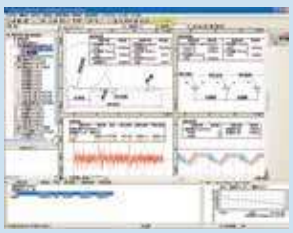

Contour Measurement and Surface Roughness Measurement Screen



Report Layout Screen

SPECIFICATIONS

Model No.	SV-C4500S CNC	SV-C4500H CNC
Order No. (100V - 120V)	**525-674-1**	**525-694-1A**
X1-axis measuring range	8" (200mm)	8" (200mm)
Z2-axis vertical travel	12" (300mm)	20"(500mm)
Y-axis table unit	Installed	Installed
α-axis unit	Installed	Installed
Granite base size (WxD)	29.5 x 23.6"(750 x 600mm)	29.5 x 23.6"(750 x 600mm)
Dimensions (main unit, WxDxH)	31.5 x 24.4 x 39.4"(800 x 620 x 1000mm)	31.5 x 24.4 x 47.2"(800 x 620 x 1200mm)
Mass (main unit)	529 lbs (240kg)	551 lbs (250kg)

DIMENSIONS

Unit: mm

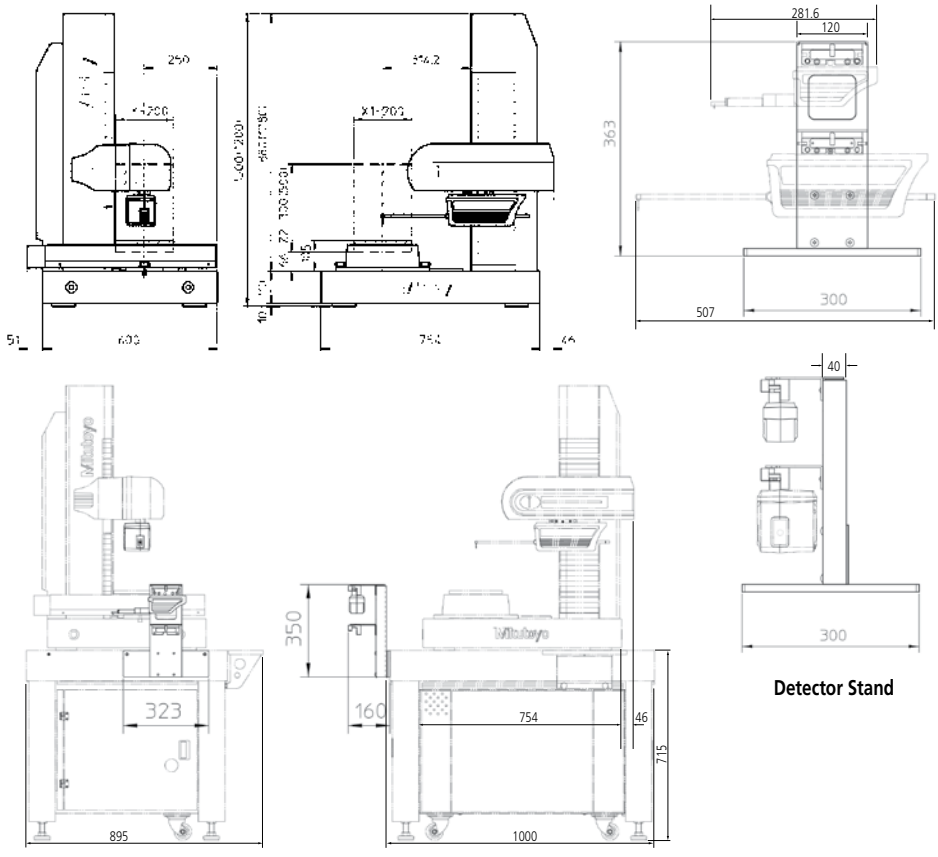

Detector Stand

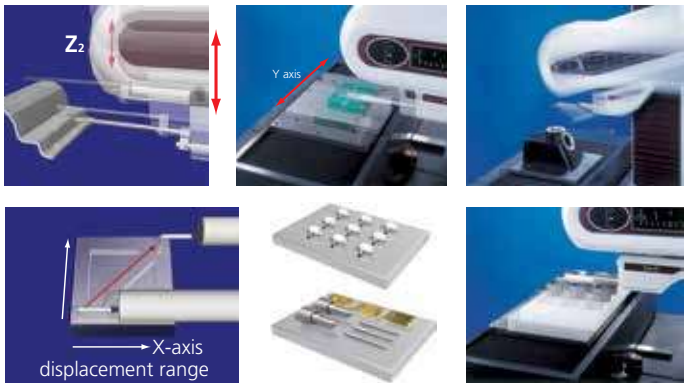

Mitutoyo

Formtracer CS-3200

SERIES 525 — Form Measuring Instruments



CS-3200S4 with personal computer system and software
* PC stand not included.

FEATURES

- Highest measurement accuracy in its class.
  X axis: ±(1+0.01L)µm
  Z1 axis: ±(1.5+l2Hl/100)µm
- To detect surface roughness and contour in a single measurement the Z1-axis detector unit of CS-3200S4 has a wide measuring range and high resolution of 5mm / 0.08µm to 0.05mm / 0.0008µm.

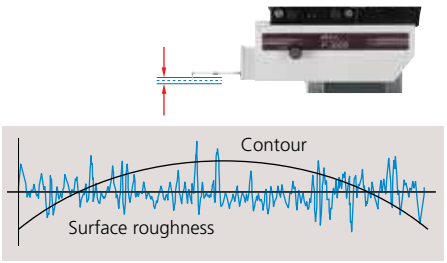

- In order to maintain the traverse linearity specification for an extended period of time, Mitutoyo has adopted highly rigid ceramic guides that combine the characteristics of smallest secular change and remarkable resistance to abrasion.
- Drastically increased drive speed further reduces total measurement time.
  X axis: 80mm/s, Z2 axis: 20mm/s
- To enhance safety during fast traverse, the Z-axis detector unit incorporates a safety device (Automatic Stop-On-Collision Mechanism).
- The detector unit can be extended to avoid interference between the drive unit and workpiece. The measuring range is shifted to the left by 2.76" (70mm).



- Incorporation of an ABS scale in the Z2 axis eliminates the need for origin point re-setting conventionally required for every step of repeated measurements over step or multiple sections.
- Small holes and inclined planes can be efficiently measured using the inclined X-axis drive unit and fine-feed handles on the X and Z2 axes.
- All detector and drive unit cables are housed inside the main unit to eliminate any risk of abrasion and guarantee trouble-free, high-speed operation.
- Orientation of the drive unit can be inclined by ±45°. This allows CS-3200 to measure an inclined surface quickly.

ABSOLUTE®
Absolute System Patented by MITUTOYO

Technical Data: Contour Measurement

X1-axis	
Measuring range:	4" (100mm)
Resolution:	1.97µin (0.05µm)
Measurement method:	Reflective-type linear encoder
Drive speed:	0 - 3.1"/s (0 - 80mm/s) and manual
Measuring speed:	.00078 - .00787"/s (0.02 - 0.2mm/s) (surface roughness) 0.00078 - 0.0787"/s (0.02 - 2mm/s) (contour)
Measuring direction:	Forward / Backward
Traverse linearity:	8µin/4" (16µin/4") [0.2µm/100mm (0.4µm/100mm)] ( ): at the protruded detector position *with the X axis in horizontal orientation
Linear displacement accuracy (at 20°C):	± (32+10L)µin {±(0.8+0.01L)µm} * L = Drive length (mm)
Inclination range:	±45°
Z2-axis (column)	
Vertical travel:	12" (300mm)
Resolution:	39.4µin (1µm)
Measurement method:	ABSOLUTE linear encoder
Drive speed:	0 - .78"/s (0 - 20mm/s) and manual
Z1-axis (detector unit)	
Measuring range / resolution:	3µin/.2", .3µin/.02", .03µin/.002" (0.08µm/5mm, 0.008µm/0.5mm, 0.0008µm/0.05mm)
Measurement method:	Differential inductance method
Linear displacement Accuracy (at 20°C)	±(60+20H)µin ±(1.5+2H/100)µm *H: Measurement height from the horizontal position (mm)
Stylus up/down operation:	Arc movement
Face of stylus:	Downward
Measuring force:	0.75mN
Traceable angle:	Ascent: 65°, descent: 65° (using the standard stylus provided and depending on the surface roughness)
Stylus tip	Radius: 2µm, diamond
Base size (W x H):	23.6 x 17.7" (600 x 450mm)
Base material:	Granite
Mass:	309 lbs (140kg) (main unit)
Power supply:	100 – 240VAC ±10%, 50/60Hz
Power consumption:	400W (main unit only)

Protrusion of Detector Position

Normal detector position

Unit: mm

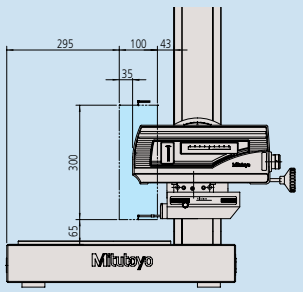

When detector is maximally extended
(Extended by 70mm from normal position)

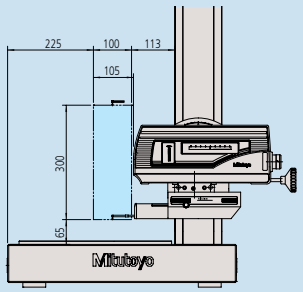

Formtracer CS-3200

SERIES 525 — Form Measuring Instruments

MiCAT
Mitutoyo Intelligent Computer Aided Technology
the standard in world metrology software
FORM

Software

FORMTRACEPAK6000

Enables control of the optional motor-driven Y-axis table and rotary table for realizing efficient measurement automation. You can also perform contour evaluation that allows free analysis of level differences, angle, pitch, area and other characteristics based on surface roughness data. In addition, you can create an original inspection certificate by setting the print format to suit your particular requirements.



Measuring instrument control

Contour analysis



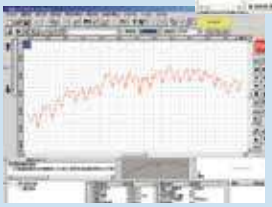

Surface roughness analysis

Design data creation (CAD file import)

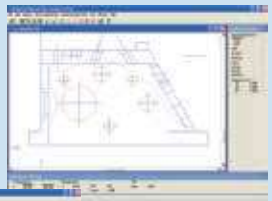



Contour verification

Inspection certificate creation



Main Unit Startup System

This machine incorporates a startup system (relocation detection system), which disables operation when an unexpected vibration is applied or the machine is relocated. Be sure to contact your nearest Mitutoyo prior to relocating this machine after initial installation.

SPECIFICATIONS

Model No.	CS-3200S4
Order No. (inch)	**525-411A**
X1-axis measuring range	4" (100mm)
Z2-axis vertical travel	12" (300mm)

Stylus

(Unit: inch (mm))

Standard stylus: No. 12AAD554

Tip radius: 2 µm
Tip angle: 60° cone
Tip material: Diamond

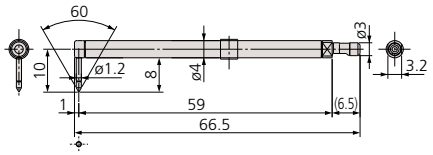

For contour/surface roughness measurement
Measurable depth: .28" (7mm) max.

Eccentric stylus: No. 12AAD558

Tip radius: 2 µm
Tip angle: 60° cone
Tip material: Diamond

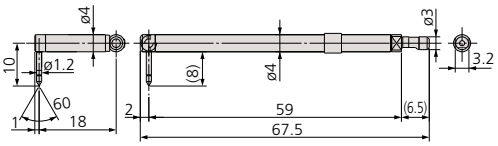

For contour/surface roughness measurement
Measurable offset length: .60" (15mm)

Cone stylus: No. 12AAD552

Tip radius: 25 µm
Tip angle: 30° cone
Tip material: Sapphire

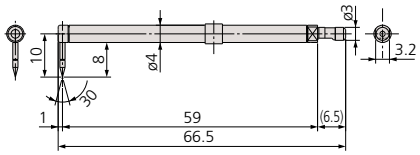

For contour measurement
Measurable depth: .28" (7mm) max.

Deep Groove stylus: No. 12AAD560

Tip radius: 2 µm
Tip angle: 60° cone
Tip material: Diamond

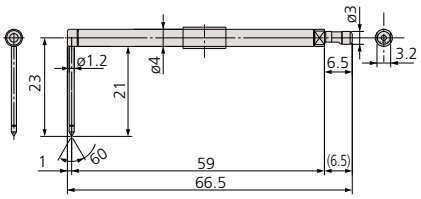

For contour/surface roughness measurement
Measurable depth: .79" (20mm) max.

Small hole stylus: No. 12AAD556

Tip radius: 2 µm
Tip angle: 60° cone
Tip material: Diamond

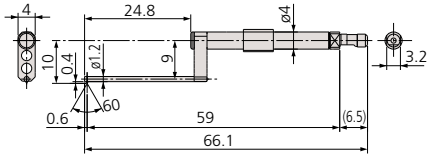

For contour/surface roughness measurement
Applicable hole: ø.08" (ø2mm) min.

2x-long stylus: No. 12AAD562

Tip radius: 5 µm
Tip angle: 40° cone
Tip material: Diamond

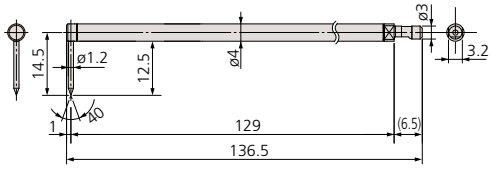

For contour/surface roughness measurement
Measurable depth: .39" (10mm) max.

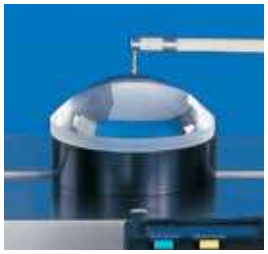

Measuring lens



Measuring ball screw



Measuring bearing ring

Mitutoyo

Formtracer Extreme CS-5000CNC / CS-H5000CNC

SERIES 525 — CNC Form Measuring Instruments



CS-H5000CNC with personal computer system and software

* PC stand not included

Remote box



Wide range detector employing active control technology



FEATURES

- High-accuracy stylus-type CNC surface measuring instrument allows simultaneous measurement of surface roughness and form/contour.
- The X1 axis has a maximum drive speed of 1.57"/s (40 mm/s) and Z2 axis has a maximum drive speed of 7.87"/s (200 mm/s). This permits high-speed positioning that may result in a large increase in the throughput of multiple-profile / multiple-workpiece measurement tasks.
- A Mitutoyo Laser Holoscale is incorporated in the X1 axis and Z1 axis so that high resolution (X1 axis: 6.25nm, Z1 axis: 4nm/8nm) is achieved and batch measurement of form / contour and surface roughness can be made.
- The active control method is employed for the Z1-axis detector to implement a wide-range measurement capability wherein the variation in dynamic measuring force is restricted.
- Since the Z1-axis detector incorporates an anti-collision safety device, the detector unit will automatically stop even if its main body collides with a workpiece or fixture.
- For models with the α-axis, it is possible to perform continuous measurement over horizontal and inclined surfaces by power-tilting the X1 axis.
- For models with the Y-axis table, it is possible to expand the measuring range for multiple workpieces, etc., through positioning in the Y-axis direction.
- Supplied with the easy-to-operate Remote Box, the user can make any movement by selecting the required axis using the two joysticks. The current axis selection is easily identified by the icon on the key top.
- Uses USB for communicating with the Data Processing / Analysis Unit (optional).

Technical Data:

X1 axis

Measuring range:	8" (200mm)
Resolution:	0.25µin (0.00625µm)
Measurement method:	Laser Holoscale
Drive speed:	Max. 1.57"/s (40mm/s) (in CNC mode) 0 - 1.57"/s (0 - 40mm/s) (in joystick control mode)
Measuring speed:	.0008 - .008"/s (0.02 - 0.2mm/s) (surface roughness) .0008 - .08"/s (0.02 - 2mm/s) (form/contour)
Measuring direction:	Forward / Backward
Traverse linearity:	(4+1.5L)µin {(0.1+0.0015L)µm} with standard stylus (8+1.5L)µin {(0.2+0.0015L)µm} with 2X-long stylus
*Traverse linearity:	(2+3L)µin {(0.05+0.0003L)}µm with standard stylus (4+1.5L)µin {(0.1+0.0015L)}µm with 2X-long stylus
Linear displacement accuracy ±(20°C):	±(12+2L)µin {±(0.3+0.002L)µm}
*Linear displacement accuracy ±(20°C):	±(2.8+6.3+L)µin {±(0.16+0.001L)µm} L = Measured length inch (mm)

Z1 axis

Measuring range:	.47" (12mm) (with standard stylus) .94" (24mm) (with 2X-long stylus)
Resolution:	.16µin (0.004µm) (with standard stylus) .32µin (0.008µm) (with 2X-long stylus)
*Resolution:	.03µin (0.0008µm) (with standard stylus) .06µin (0.0016µm) (with 2X-long stylus)
Stylus up/down:	Arc movement
Measurement method:	Transmission-type laser linear encoder
Linear displacement accuracy (20°C):	±(12+120H)µin {±(0.3+I0.02HI)µm}
*Linear displacement accuracy (20°C):	±(2.8+120H)µin {±(0.07+I0.02HI)µm} H = Measured height inch (mm)
Measuring force:	4mN (with standard stylus) 0.75mN (with 2X-long stylus)
Traceable angle:	60° for ascent, 60° for descent (Depending on the workpiece surface condition)
Stylus tip: (ball stylus)	Radius: 5µm, angle: 40°, diamond (Radius: 0.25mm, sapphire)
Face of stylus:	Downward

Z2 axis (column unit)

Measuring range:	12" (300mm) (20" (500mm) high column type)
Resolution:	1.97µin (0.05µm)
Measurement method:	Reflective-type linear encoder
Drive speed:	Max. 7.87"/s (200mm/s) (in CNC mode) 0 - 1.97"/s (0 - 50mm/s) (in joystick control mode)
Base size (W x D):	29.5 x 23.6" (750 x 600mm)
Base material:	Granite
Dimension (W x D x H):	31.5 x 24.4 39.4" (800 x 620 x 1000mm) 31.5 x 24.4 x 47.2" (800 x 620 x 1200mm: high column type)
Mass:	529 lbs (240kg) 551 lbs (250kg): high column type))

*CS-H5000CNC model in red.

MiCAT
Mitutoyo Intelligent Computer Aided Technology
the standard in world metrology software
FORM

Formtracer Extreme CS-5000CNC / CS-H5000CNC

SERIES 525 — CNC Form Measuring Instruments

Software

FORMTRACEPAK V5
Enables control of the optional motor-driven Y-axis table and rotary table for realizing efficient measurement automation. You can also perform contour evaluation that allows free analysis of level differences, angle, pitch, area and other characteristics based on surface roughness data. In addition, analysis results can be saved in the "html", "mhtml" or pdf format which allows Internet Explorer or MS-Word compatibility, allowing PC without layout editing programs to view analysis results.



Contour Measurement and Surface Roughness Measurement Screen



Report Layout Screen

ASLPAK (optional software)
Aspherical lens analysis program recommended to be used with CS-H5000CNC and CS-5000CNC models. To make full use of software functions, optional accessories such as y-axis table, 3DALT and theta θ-1 table are required. The functions can be restricted without the optional accessories.



SPECIFICATIONS

Model No.	CS-5000CNC	CS-5000CNC	CS-5000CNC	CS-5000CNC
Order No. (100V - 120V)	**525-736A**	**525-737A**	**525-738A**	**525-739A**
X1-axis measuring range	8" (200mm)	8" (200mm)	8" (200mm)	8" (200mm)
Z2-axis vertical travel	12" (300mm)	12" (300mm)	12" (300mm)	12" (300mm)
Y-axis table unit	—	—	Installed	Installed
α-axis unit	—	Installed	—	Installed

Model No.	CS-5000CNC	CS-5000CNC	CS-5000CNC	CS-5000CNC
Order No. (100V - 120V)	**525-756A**	**525-757A**	**525-758A**	**525-759A**
X1-axis measuring range	8" (200mm)	8" (200mm)	8" (200mm)	8" (200mm)
Z2-axis vertical travel	20" (500mm)	20" (500mm)	20" (500mm)	20" (500mm)
Y-axis table unit	—	—	Installed	Installed
α-axis unit	—	Installed	—	Installed

Model No.	CS-H5000CNC	CS-H5000CNC
Order No. (100V - 120V)	**525-786A**	**525-787A**
X1-axis measuring range	8" (200mm)	8" (200mm)
Z2-axis vertical travel	12" (300mm)	12" (300mm)
Y-axis table unit	—	Installed

Stylus

12AAD543*1**:** Standard-length stylus (tip radius: 5µm)
12AAJ037*2**:** For CS-H5000CNC (tip radius: 5µm)
Tip material: Diamond

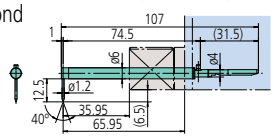

12AAD544*1*2**:** Standard-length ball stylus (tip radius: 5µm)
Tip material: Sapphire

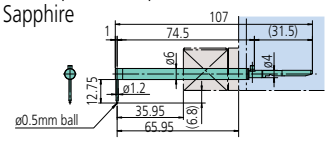

12AAD545*1**:** Double-length stylus (tip radius: 5µm)
12AAJ039*2**:** For CS-H5000CNC (tip radius: 5µm)
Tip material: Diamond

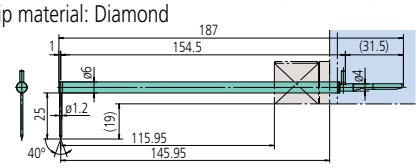

12AAD546*1*2**:** Double-length ball stylus
Tip material: Sapphire

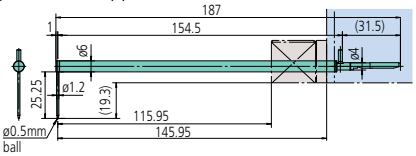

*1: Standard accessory of CS-5000CNC
*2: Standard accessory of CS-H5000CNC

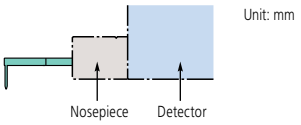

12AAD651: Standard-length stylus for small hole
Tip radius: 5µm
Tip material: Diamond

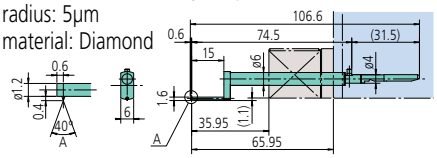

12AAD652: Standard-length stylus for extra-small hole
Tip radius: 5µm
Tip material: Diamond

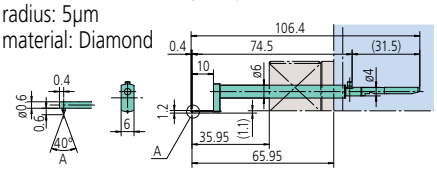

12AAD653: Standard-length eccentric stylus
Tip radius: 5µm
Tip material: Diamond

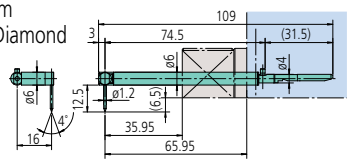

12AAJ041*2**:** Double-length stylus (tip radius: 2µm)
Tip material: Diamond

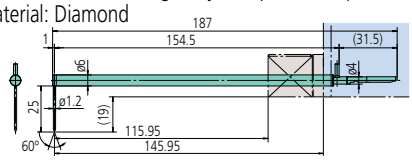

Mitutoyo

Optional Styli for Surface Roughness Measurement

Compatible with SJ-410, SJ-500, SV-2100, SV-3100, SV-3000CNC, SV-M3000CNC, SV-C3200, SV-C4500 Series

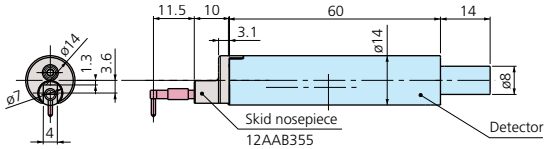

Detector (0.75mN): **178-396-2**
Detector (4mN): **178-397-2**

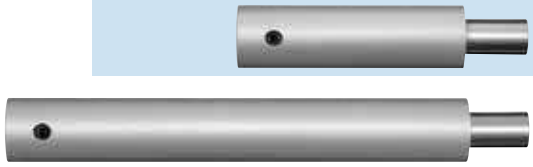

Extension rods
(12AAG202: 50mm, 12AAG203: 100mm)

Styli

Unit: mm

Standard stylus

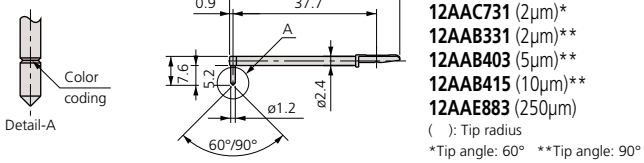

12AAE882 (1µm)*
12AAE924 (1µm)**
12AAC731 (2µm)*
12AAB331 (2µm)**
12AAB403 (5µm)**
12AAB415 (10µm)**
12AAE883 (250µm)
( ): Tip radius
*Tip angle: 60° **Tip angle: 90°

2X long for deep hole

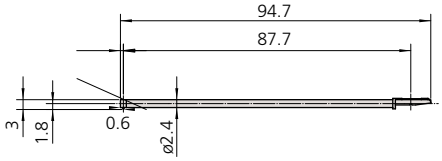

12AAE898 (2µm)*
12AAE914 (5µm)**
( ): Tip radius
*Tip angle: 60° **Tip angle: 90°

For small hole

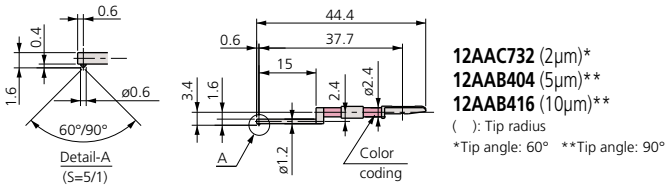

12AAC732 (2µm)*
12AAB404 (5µm)**
12AAB416 (10µm)**
( ): Tip radius
*Tip angle: 60° **Tip angle: 90°

For small hole/2X long for deep hole

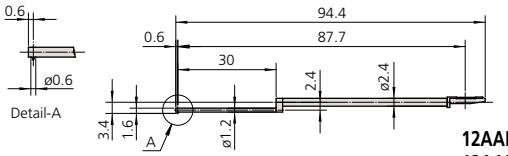

12AAE892 (2µm)*
12AAE908 (5µm)**
( ): Tip radius
*Tip angle: 60° **Tip angle: 90°

For extra-small hole

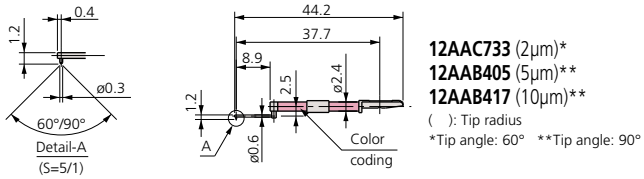

12AAC733 (2µm)*
12AAB405 (5µm)**
12AAB417 (10µm)**
( ): Tip radius
*Tip angle: 60° **Tip angle: 90°

For small hole*2

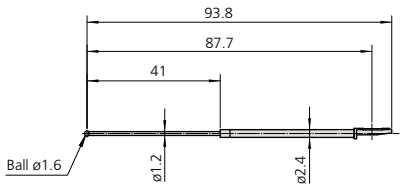

12AAE884 (0.8mm)
( ): Tip radius

For extra-minute hole

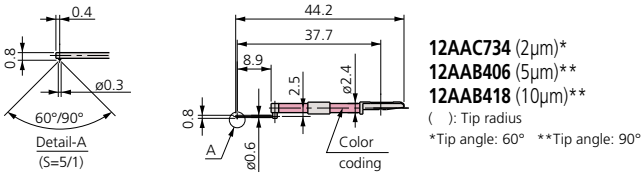

12AAC734 (2µm)*
12AAB406 (5µm)**
12AAB418 (10µm)**
( ): Tip radius
*Tip angle: 60° **Tip angle: 90°

For ultra-small hole *1*2

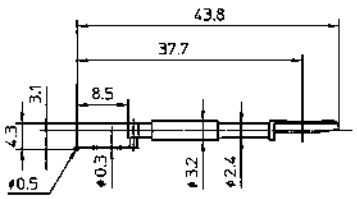

12AAJ662 (0.25mm)
( ): Tip radius

For deep hole (2X long and 3X long)

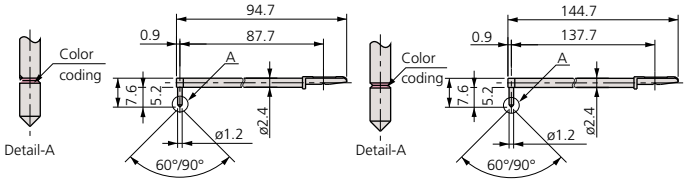

2X stylus
12AAC740 (2µm)*
12AAB413 (5µm)**
12AAB425 (10µm)**
( ): Tip radius
*Tip angle: 60° **Tip angle: 90°

3X stylus
12AAC741 (2µm)*
12AAB414 (5µm)**
12AAB426 (10µm)**
( ): Tip radius
*Tip angle: 60° **Tip angle: 90°

For small-slotted hole

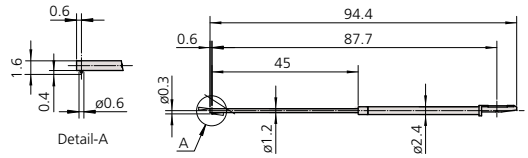

12AAE938 (2µm)*
12AAE940 (5µm)**
( ): Tip radius
*Tip angle: 60° **Tip angle: 90°

*1: For downward-facing measurement only
*2: Used for calibration, a standard step gauge (No.178-611, option) is also required.

Tip radius	1µm	2µm	5µm	10µm	250µm
Color coding	White	Black	No color	Yellow	No notch or color

Optional Styli for Surface Roughness Measurement

Compatible with SJ-410, SJ-500, SV-2100, SV-3200, SV-3000CNC, SV-M3000CNC, SV-C3200, SV-C4500 Series

Styli

Unit: mm

For deep goove (10mm)

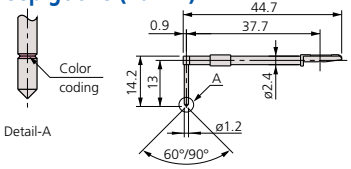

12AAC735 (2µm)*
12AAB409 (5µm)**
12AAB421 (10µm)**
( ): Tip radius
*Tip angle: 60° **Tip angle: 90°

For deep groove (20mm)

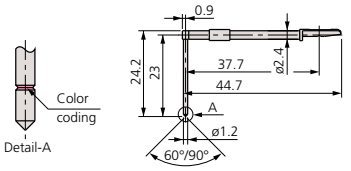

12AAC736 (2µm)*
12AAB408 (5µm)**
12AAB420 (10µm)**
( ): Tip radius
*Tip angle: 60° **Tip angle: 90°

For deep groove (30mm)

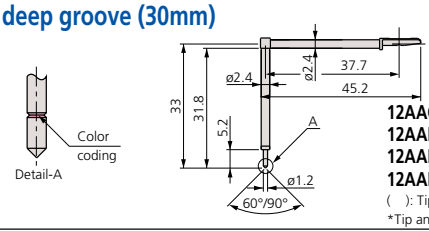

12AAC737 (2µm)*
12AAB335 (2µm)**
12AAB407 (5µm)**
12AAB419 (10µm)**
( ): Tip radius
*Tip angle: 60° **Tip angle: 90°

For gear tooth

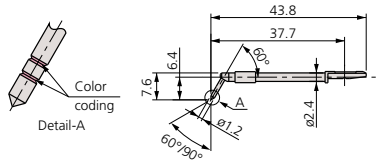

12AAB339 (2µm)*
12AAB410 (5µm)**
12AAB422 (10µm)**
( ): Tip radius
*Tip angle: 60° **Tip angle: 90°

For rolling circle waviness surface*2

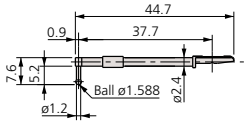

12AAB338 (0.8mm)
( ): Tip radius

For knife-edge detector

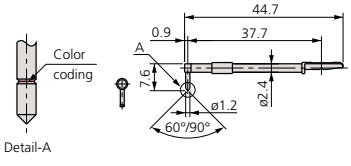

12AAC738 (2µm)*
12AAB411 (5µm)**
12AAB423 (10µm)**
( ): Tip radius
*Tip angle: 60° **Tip angle: 90°

For eccentric arm*1

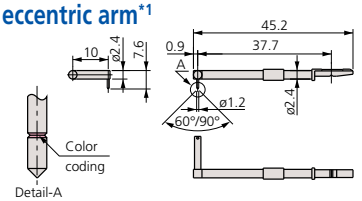

12AAC739 (2µm)*
12AAB412 (5µm)**
12AAB424 (10µm)**
( ): Tip radius
*Tip angle: 60° **Tip angle: 90°

For deep groove (20mm)*1/2X Long for deep hole

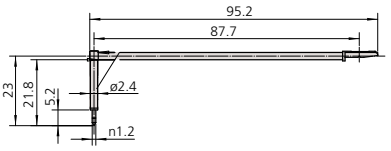

12AAE893 (2µm)*
12AAE909 (5µm)**
( ): Tip radius
*Tip angle: 60° **Tip angle: 90°

For deep groove (40mm)*1

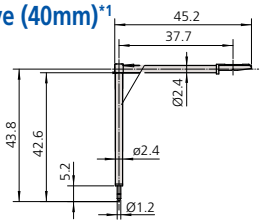

12AAE895 (2µm)*
12AAE911 (5µm)**
( ): Tip radius
*Tip angle: 60° **Tip angle: 90°

For deep groove (30mm)*1/2X Long for deep hole

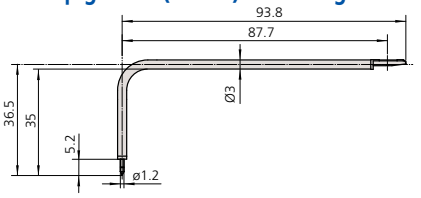

12AAE894 (2µm)*
12AAE910 (5µm)**
( ): Tip radius
*Tip angle: 60° **Tip angle: 90°

For gear tooth*1/2X Long for deep hole

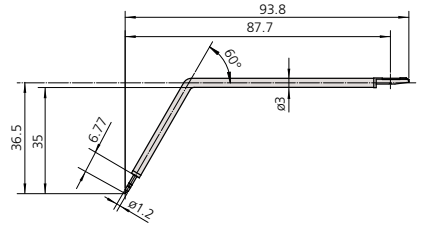

12AAE896 (2µm)*
12AAE912 (5µm)**
( ): Tip radius
*Tip angle: 60° **Tip angle: 90°

For rolling circle waviness*1/2X Long for deep hole*2

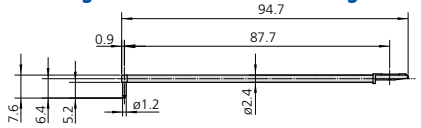

12AAE886 (0.25mm)
( ): Tip radius

For corner hole*1/2X Long for deep hole

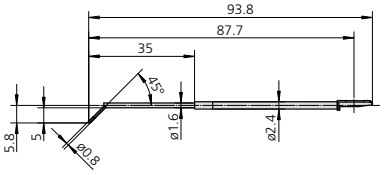

12AAM601 (2µm)*
12AAM603 (5µm)**
( ): Tip radius
*Tip angle: 60° **Tip angle: 90°

For bottom surface

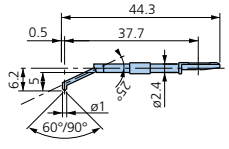

12AAE899 (2µm)*
12AAE915 (5µm)**
( ): Tip radius
*Tip angle: 60° **Tip angle: 90°

Tip radius	1µm	2µm	5µm	10µm	250µm
Color coding	White	Black	No color	Yellow	No notch or color

*1: For downward-facing measurement only
*2: Used for calibration, a standard step gauge (No.178-611, option) is also required.

Mitutoyo

Optional Accessories for Automatic Measurement

Compatible with SV-3200, SV-C3200, SV-C4500, CS-3200 and CNC Models

Y-axis table*: 178-097

A Y-axis table for both positioning and capable of 3D surface roughness measurement when used withoptional software FTPK-PRO or MCubeMap.**

* Not supporting Y-axis measurements. ** Only for **178-096**

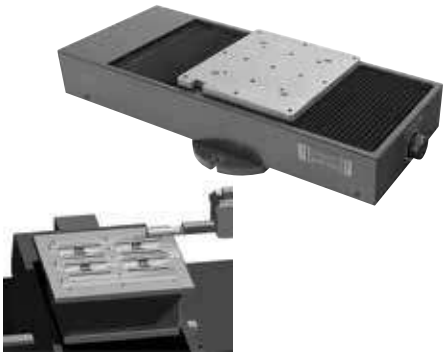

	178-097	178-096
Travel range	8" (200mm)	4" (100mm)
Resolution	1.97µin (0.05µm)	1.97µin (0.05µm)
Positioning accuracy	±3µm	±1µm
Drive speed	Max. 3.15"/s (80mm/s)	Max. .78"/s (20mm/s)
Maximum load	110 lbs (50kg)	33 lbs (50kg)
Mass	62 lbs (28kg)	68 lbs (31kg)

θ2-axis table: 178-078*

You can measure multiple points on a cylindrical workpiece and automate front/rear-side measurement.

* θ2-axis mounting plate (**12AAE718**) is required when directly installing on the base of the SV-3100.



Displacement	360°
Resolution	0.0072°
Maximum load (loading moment)	8.8 lbs (4kg) (343 N•cm or less)
Rotational speed	Max. 18°/s
Mass	11 lbs (5kg)

Quick chuck: 211-032

This chuck is useful when measuring small workpieces. You can easily clamp them with its knurled ring.



Retention range	Inner latch	OD: ø.04 - 1.42" (1 - 36mm)
	Inner latch	ID: ø.55 - 2.76" (14 - 70mm)
	Outer latch	OD: ø.04 - 2.95" (1 - 75mm)
Dimensions		ø 4.65 x 1.61" (118 x 41mm)
Mass		2.6 lbs (1.2kg)

θ1-axis table: 12AAD975*

For efficient measurement in the axial/transverse directions. When measuring a cylindrical workpiece, automatic alignment can be performed in combination with the Y-axis table.

* θ1-axis mounting plate (**12AAE630**) is required when directly installing on the base of the SV-3100.

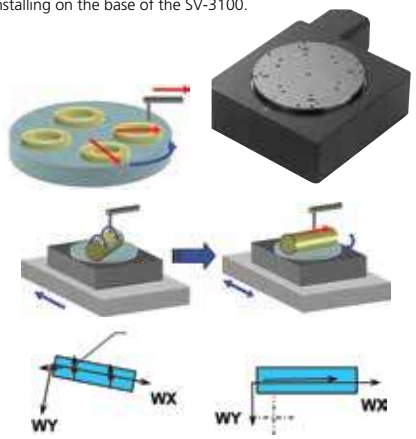

Displacement	360°
Resolution	0.004°
Maximum load	26.5 lbs (12kg)
Rotational speed	Max. 10°/s
Mass	15 lbs (7kg)

Auto-leveling table: 178-087

This is a stage that performs fully automatic leveling as measurement starts, freeing the user from this troublesome operation. Fully automatic leveling can be done quickly by anyone. In addition, the operation is easy and reliable.



Inclination adjustment angle	±2°
Maximum load	15 lbs (7kg)
Table dimensions	5.1 x 3.9"(130 x 100mm)
Mass	7.7 lbs (3.5kg)

Micro-chuck: 211-031

This chuck is suitable for clamping extra-small diameter workpieces (ø1mm or less), which cannot be retained with the centering chuck.



Retention range	OD: ø 0 - .06" (0 - 1.5mm)
Dimensions	ø 4.65 x 1.9" (118 x 48.5mm)
Mass	1.3 lbs (0.6kg)

Examples of optimal combinations of accessories for CNC models

Optional accessory / Function	Y-axis Table	θ1 Table	θ2 Table
Automatic leveling	—	—	—
Automatic alignment (Patent registered: Japan)	●	●	—
Multiple workpiece batch measurement	▲	—	—
Measurement in the Y-axis direction	●	—	—
Oblique measurement of XY plane **	●	—	—
Outside 3D surface roughness measurement/evaluation **	●	—	—
Multiple-piece measurement in the Y-axis direction (Positioning in the Y-axis direction)	●	—	—
Multiple-piece measurement in the radius direction (Positioning in the rotating direction of XY plane)	▲	●	—
Tracking measurement in the Z-axis direction *	—	—	—
Inclined surface measurement in the X-axis direction	▲	—	—
Inclined hole inside measurement in the X-axis direction	▲	—	—
Multiple cylinder generatrix line measurement	▲	—	●
Measurement of both top and bottom surfaces	▲	—	●
Rotary positioning of large workpiece ***	—	—	—
Upward/downward and frontward/backward measurement of large workpiece ***	—	—	—

* : Applicable only to form/contour measurement
** : Applicable only to surface roughness measurement
*** : Applicable only for SV-M3000CNC

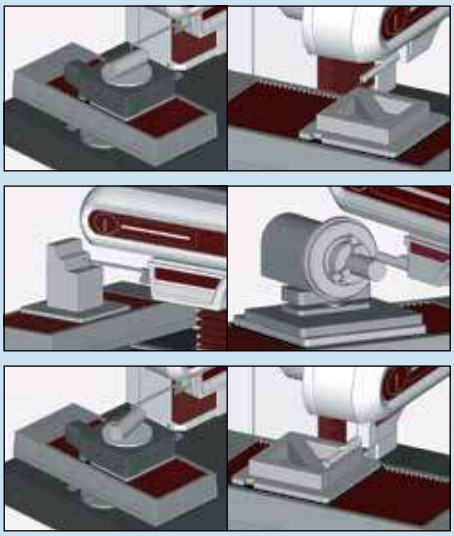

Drive unit tilting function (Patent pending: Japan)	Large θ Table	Rotary-type detector holder
		
●	—	—
▲	—	—
—	—	—
—	—	—
—	—	—
▲	—	—
—	—	—
—	—	—
—	—	—
●	—	—
●	—	—
—	—	—
—	—	—
—	●	—
—	—	●

●: Essential ▲: Recommended
—: Not necessary

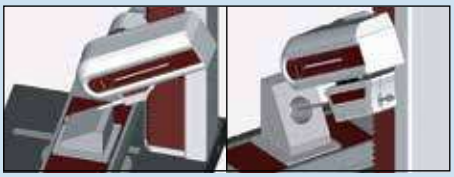





Optional Accessories for Surftest / Formtracer

Compatible with Desktop Models of Surftest and Formtracer

3-axis adjustment table

This table helps make the required alignment adjustments when measuring cylindrical surfaces. The corrections for the pitch angle and the swivel angle are determined from a preliminary measurement and the Digimatic micrometers are adjusted accordingly. A flat-surfaced workpiece also can be leveled with this table.

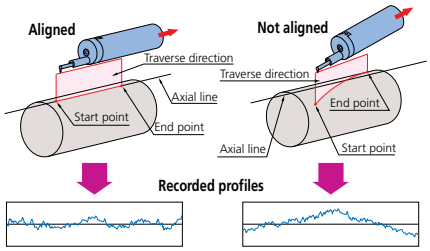



178-047
(V-block not included)





Leveling table

178-043-1 (mm), **178-053-1** (inch)
- Table top: 130 x 100mm
- Leveling range: ±1.5°
- XY travel: ±12.5mm



Digital leveling table

178-042-1 (mm)
178-052-1 (inch)
- Table top: 130 x 100mm
- Leveling range: ±1.5°
- XY travel: ±12.5mm

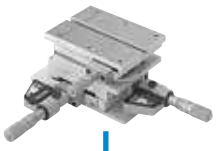

Leveling table

178-016
- Table top: 130 x 100mm
- Leveling range: ±1.5°
- Height: 40mm

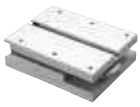

Calibration stand *1

12AAM100



Calibration stand *2

12AAG175



Calibration stand *3

12AAM309



V-block

998291
- Workpiece diameter: 1mm to 160mm
- Can be mounted on a leveling table

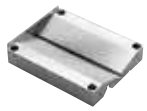

Precision vise

178-019
- Max. workpiece size: 36mm
- Can be mounted on a leveling table.



Cross-travel table

218-001 (mm),
218-011 (inch)
- Table top: 280 x 180mm
- XY travel: 100 x 50mm



Cross-travel table

218-041 (mm),
218-051 (inch)
- Table top: 280 x 152mm
- XY travel: 50 x 25mm





Rotary vise

218-003
- Two-slide jaw type.
- Max. workpiece size: ø60mm
- Minimum reading: 1°



Center support

172-142
- Max. workpiece dia.: 120mm
- 60mm riser is optional



Center support riser

172-143
- Used with a center support.
- Max. workpiece dia.: 240mm



Swivel center support

172-197
- Max. workpiece dia.: 80mm*
  *65mm when swiveled 10°
- Max. workpiece length: 140mm



Holder with clamp

176-107
- Used with a cross-travel table or rugged table.
- Max. workpiece height: 35mm



V-block with clamp

172-234, 172-378
- Used with a cross-travel table or rugged table.
- Max. workpiece dia.:
  50mm (**172-234**),
  25mm (**172-378**)

*1: Required for calibrating upward measurement of **CV-3200** series.
*2: Required for calibrating in bulk by mounting straight arm/small-hole stylus arm without using cross-travel table and Y-axis table.
*3: Required for calibrating in bulk by mounting straight arm/eccentric arm/small-hole stylus arm without using cross-travel table and Y-axis table.

Mitutoyo

Quick Guide to Precision Measuring Instruments

Surftest (Surface Roughness Testers)

- JIS B 0601:2001 Geometric Product Specifications (GPS) –Surface Texture: Profile method– Terms, definitions, and surface texture parameters
- JIS B 0632:2001 Geometric Product Specifications (GPS) –Surface Texture: Profile method– Metrological characterization of phase-correct filters
- JIS B 0633:2001 Geometric Product Specifications (GPS) –Surface Texture: Profile method– Rules and procedures for the assessment of surface texture
- JIS B 0651:2001 Geometric Product Specifications (GPS) –Surface Texture: Profile method– Nominal characteristics of contact (stylus) instruments

Nominal Characteristics of Contact (Stylus) Instruments

JIS B 0651: 2001 (ISO 3274: 1996)

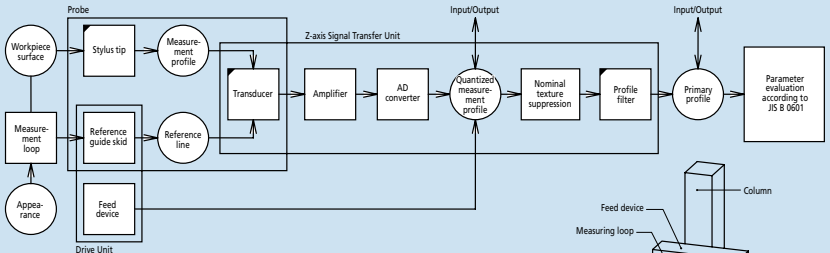

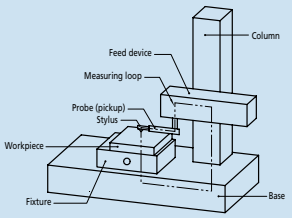

Stylus Shape

A typical shape for a stylus end is conical with a spherical tip.
Tip radius: r_{tip} = 2 µm, 5 µm or 10 µm
Taper angle of cone: 60°, 90°
In typical surface roughness testers, the taper angle of the stylus end is 60° unless otherwise specified.

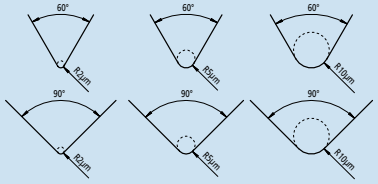

Static Measuring Force

Nominal radius of curvature of stylus tip: µm	Static measuring force at the mean position of stylus: mN	Tolerance on static measuring force variations: mN/µm
2	0.75	0.035
5	0.75 (4.0) Note 1	0.2
10		

Note 1: The maximum value of static measuring force at the average position of a stylus is to be 4.0mN for a special structured probe including a replaceable stylus.

Relationship between Cutoff Value and Stylus Tip Radius

The following table lists the relationship between the roughness profile cutoff value λc, stylus tip radius r_{tip}, and cutoff ratio λc/λs.

λc mm	λs µm	λc/λs	Maximum r_{tip} µm	Maximum sampling length µm
0.08	2.5	30	2	0.5
0.25	2.5	100	2	0.5
0.8	2.5	300	2 Note 1	0.5
2.5	8	300	5 Note 2	1.5
8	25	300	10 Note 2	5

Note 1: For a surface with Ra>0.5µm or Rz>3µm, a significant error will not usually occur in a measurement even if r_{tip}= 5µm.
Note 2: If a cutoff value λs is 2.5µm or 8µm, attenuation of the signal due to the mechanical filtering effect of a stylus with the recommended tip radius appears outside the roughness profile pass band. Therefore, a small error in stylus tip radius or shape does not affect parameter values calculated from measurements. If a specific cutoff ratio is required, the ratio must be defined.

Metrological Characterization of Phase Correct Filters

JIS B 0632: 2001 (ISO 11562: 1996)

A profile filter is a phase-correct filter without phase delay (cause of profile distortion dependent on wavelength).
The weight function of a phase-correct filter shows a normal (Gaussian) distribution in which the amplitude transmission is 50% at the cutoff wavelength.

Data Processing Flow

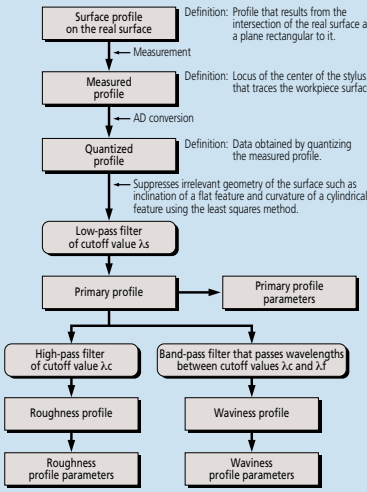

Surface Profiles

JIS B 0601: 2001 (ISO 4287: 1997)

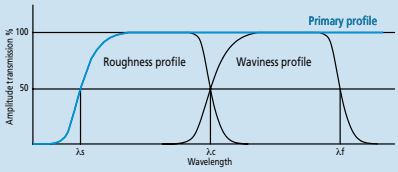

Primary Profile

Profile obtained from the measured profile by applying a low-pass filter with cutoff value λs.

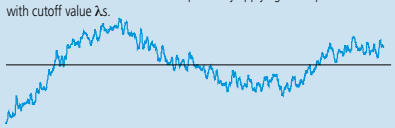

Roughness Profile

Profile obtained from the primary profile by suppressing the longer wavelength components using a high-pass filter of cutoff value λc.



Waviness Profile

Profile obtained by applying a band-pass filter to the primary profile to remove the longer wavelengths above λf and the shorter wavelengths below λc.

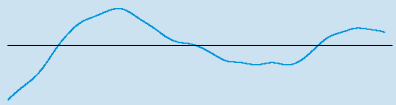

Definition of Parameters

JIS B 0601 : 2001 (ISO 4287 : 1997)

Amplitude Parameters (peak and valley)

Maximum peak height of the primary profile Pp
Maximum peak height of the roughness profile Rp
Maximum peak height of the waviness profile Wp

Largest profile peak height Zp within a sampling length

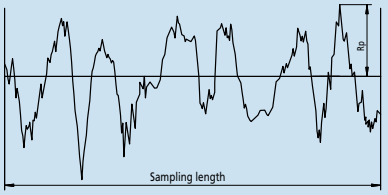

Maximum valley depth of the primary profile Pv
Maximum valley depth of the roughness profile Rv
Maximum valley depth of the waviness profile Wv

Largest profile valley depth Zv within a sampling length

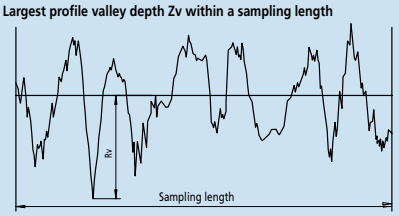

Maximum height of the primary profile Pz
Maximum height of the roughness profile Rz
Maximum height of the waviness profile Wz

Sum of height of the largest profile peak height Zp and the largest profile valley depth Zv within a sampling length

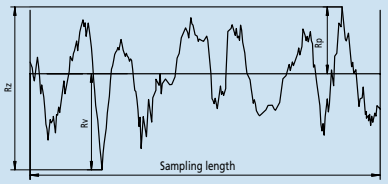

In Old JIS and ISO 4287-1: 1984, Rz was used to indicate the "ten point height of irregularities." Care must be taken because differences between results obtained according to the existing and old standards are not always negligibly small. (Be sure to check whether the drawing instructions conform to existing or old standards.)

Mean height of the primary profile elements Pc
Mean height of the roughness profile elements Rc
Mean height of the waviness profile elements Wc

Mean value of the profile element heights Zt within a sampling length

$$Pc, Rc, Wc = \frac{1}{m}\sum_{i=1}^{m} Zt_i$$

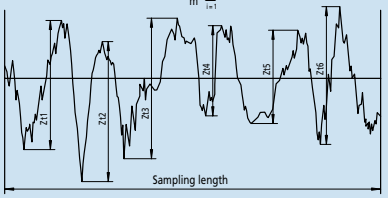

Total height of the primary profile Pt
Total height of the roughness profile Rt
Total height of the waviness profile Wt

Sum of the height of the largest profile peak height Zp and the largest profile valley depth Zv within the evaluation length

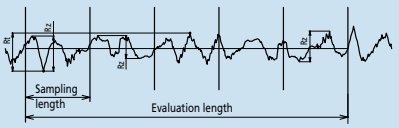

Amplitude Parameters (average of ordinates)

Arithmetical mean deviation of the primary profile Pa
Arithmetical mean deviation of the roughness profile Ra
Arithmetical mean deviation of the waviness profile Wa

Arithmetic mean of the absolute ordinate values Z(x) within a sampling length

$$Pa, Ra, Wa = \frac{1}{l}\int_0^l |Z(x)|dx$$

with l as lp, lr, or lw according to the case.

Root mean square deviation of the primary profile Pq
Root mean square deviation of the roughness profile Rq
Root mean square deviation of the waviness profile Wq

Root mean square value of the ordinate values Z(x) within a sampling length

$$Pq, Rq, Wq = \sqrt{\frac{1}{l}\int_0^l Z^2(x)dx}$$

with l as lp, lr, or lw according to the case.

Skewness of the primary profile Psk
Skewness of the roughness profile Rsk
Skewness of the waviness profile Wsk

Quotient of the mean cube value of the ordinate values Z(x) and the cube of Pq, Rq, or Wq, respectively, within a sampling length

$$Rsk = \frac{1}{Rq^3}\left[\frac{1}{lr}\int_0^{lr} Z^3(x)dx\right]$$

The above equation defines Rsk. Psk and Wsk are defined in a similar manner. Psk, Rsk, and Wsk are measures of the asymmetry of the probability density function of the ordinate values.

Kurtosis of the primary profile Pku
Kurtosis of the roughness profile Rku
Kurtosis of the waviness profile Wku

Quotient of the mean quartic value of the ordinate values Z(x) and the fourth power of Pq, Rq, or Wq, respectively, within a sampling length

$$Rku = \frac{1}{Rq^4}\left[\frac{1}{lr}\int_0^{lr} Z^4(x)dx\right]$$

The above equation defines Rku. Pku and Wku are defined in a similar manner. Pku, Rku, and Wku are measures of the sharpness of the probability density function of the ordinate values.

Spacing Parameters

Mean width of the primary profile elements PSm
Mean width of the roughness profile elements RSm
Mean width of the waviness profile elements WSm

Mean value of the profile element widths Xs within a sampling length

$$PSm, RSm, WSm = \frac{1}{m}\sum_{i=1}^{m} X_{si}$$

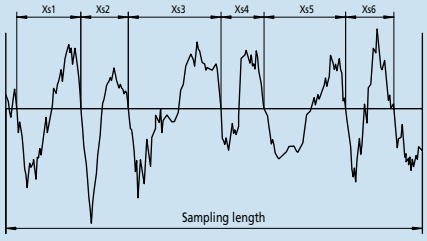

Hybrid Parameters

Root mean square slope of the primary profile PΔq
Root mean square slope of the roughness profile RΔq
Root mean square slope of the waviness profile WΔq

Root mean square value of the ordinate slopes dZ/dX within a sampling length

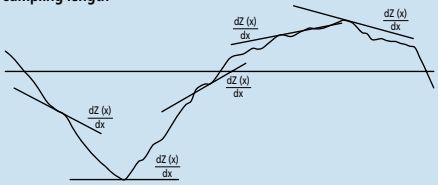

Curves, Probability Density Function, and Related Parameters

Material ratio curve of the profile (Abbott-Firestone curve)

Curve representing the material ratio of the profile as a function of section level c

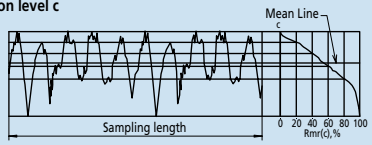

Material ratio of the primary profile Pmr(c)
Material ratio of the roughness profile Rmr(c)
Material ratio of the waviness profile Wmr(c)

Ratio of the material length of the profile elements Ml(c) at a given level c to the evaluation length

$$Pmr(c), Rmr(c), Wmr(c) = \frac{Ml(c)}{ln}$$

Section height difference of the primary profile Pdc
Section height difference of the roughness profile Rdc
Section height difference of the waviness profile Wdc

Vertical distance between two section levels of a given material ratio

$$R\delta c = c(Rmr1) - c(Rmr2);\ Rmr1<Rmr2$$

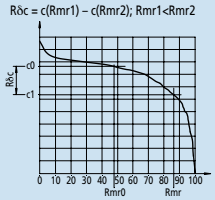

Relative material ratio of the primary profile Pmr
Relative material ratio of the roughness profile Rmr
Relative material ratio of the waviness profile Wmr

Material ratio determined at a profile section level Rδc (or Pδc or Wδc), related to the reference section level c0

$$Pmr, Rmr, Wmr = Pmr(c1), Rmr(c1), Wmr(c1)$$

where $c1 = c0 - R\delta c(R\delta c, W\delta c)$
$c0 = c(Pm0, Rmr0, Wmr0)$

Probability density function
(profile height amplitude distribution curve)

Sample probability density function of the ordinate Z(x) within the evaluation length

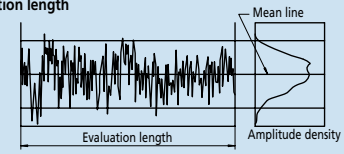

JIS Specific Parameters

Ten-point height of irregularities, Rz_{JIS}

Sum of the absolute mean height of the five highest profile peaks and the absolute mean depth of the five deepest profile valleys, measured from the mean line within the sampling length of a roughness profile. This profile is obtained from the primary profile using a phase-correct band-pass filter with cutoff values of lc and ls.

$$Rz_{JIS} = \frac{|Zp_1+Zp_2+Zp_3+Zp_4+Zp_5| + |Zv_1+Zv_2+Zv_3+Zv_4+Zv_5|}{5}$$

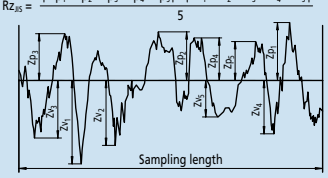

Symbol	Used profile
RzJIS82	Surface profile as measured
RzJIS94	Roughness profile derived from the primary profile using a phase-correct high-pass filter

Arithmetic mean deviation of the profile Ra_{75}

Arithmetic mean of the absolute values of the profile deviations from the mean line within the sampling length of the roughness profile (75%). This profile is obtained from a measurement profile using an analog high-pass filter with an attenuation factor of 12db/octave and a cutoff value of λc.

$$Ra_{75} = \frac{1}{ln}\int_0^{ln} |Z(x)|dx$$

Sampling Length for Surface Roughness Parameters

JIS B 0633: 2001 (ISO 4288: 1996)

Table 1: Sampling lengths for aperiodic profile roughness parameters (Ra, Rq, Rsk, Rku, RΔq), material ratio curve, probability density function, and related parameters

Ra μm	Sampling length lr mm	Evaluation length ln mm
(0.006)<Ra≤0.02	0.08	0.4
0.02 <Ra≤0.1	0.25	1.25
0.1 <Ra≤2	0.8	4
2 <Ra≤10	2.5	12.5
10 <Ra≤80	8	40

Table 2: Sampling lengths for aperiodic profile roughness parameters (Rz, Rv, Rp, Rc, Rt)

Rz Rz1max μm	Sampling length lr mm	Evaluation length ln mm
(0.025)<Rz, Rz1max≤0.1	0.08	0.4
0.1 <Rz, Rz1max≤0.5	0.25	1.25
0.5 <Rz, Rz1max≤10	0.8	4
10 <Rz, Rz1max≤50	2.5	12.5
50 <Rz, Rz1max≤200	8	40

1) Rz is used for measurement of Rz, Rv, Rp, Rc, and Rt.
2) Rzlmax only used for measurement of Rzlmax, Rvlmax, Rplmax, and Rclmax.

Table 3: Sampling lengths for measurement of periodic roughness profile roughness parameters and periodic or aperiodic profile parameter Rsm

Rsm mm	Sampling length lr mm	Evaluation length ln mm
0.013 <Rsm≤0.04	0.08	0.4
0.04 <Rsm≤0.13	0.25	1.25
0.13 <Rsm≤0.4	0.8	4
0.4 <Rsm≤1.3	2.5	12.5
1.3 <Rsm≤4	8	40

Procedure for determining a sampling length if it is not specified

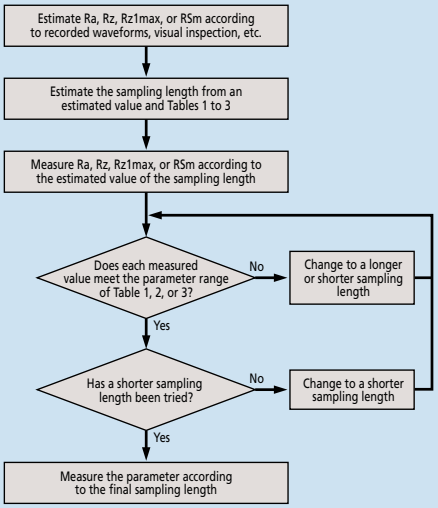

Table.1 Procedure for determining the sampling length of an aperiodic profile if it is not specified.

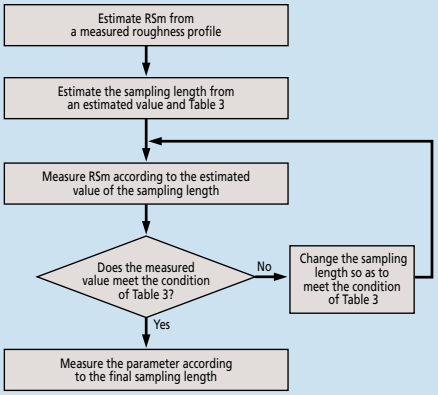

Table 2. Procedure for determining the sampling length of a periodic profile if it is not specified.

Mitutoyo

Contracer CV-2100

SERIES 218 — Contour Measuring Instruments

FEATURES

- Newly designed high-precision digital ARC scale improves the Z-axis accuracy and resolution.
- Quick-release grip handle allows for rapid traverse in column Z-axis for CV-2100M4.
- Key operation buttons are now mounted onto the X-axis drive unit, eliminating wired remote box.
- X-axis traverse speed has been greatly improved to 20mm/s allowing quick positioning and set-up time.
- New added function for automatic stylus up/down means high-volume repetitive measurements are now capable with part programming.
- Z-axis detector measuring range has been improved to 50mm for both models.
- CV-2100N4 model can be mounted to optional manual column stand or custom fixture supplied by end user.



CV-2100M4 with personal computer system and software

Connected to a personal computer, the FORMTRACEPAK V5 contour analysis program provides various modes of measurement and analysis.
*Printer not included


Centralized front control panel


Quick-vertical motion handle


X-axis jog shuttle

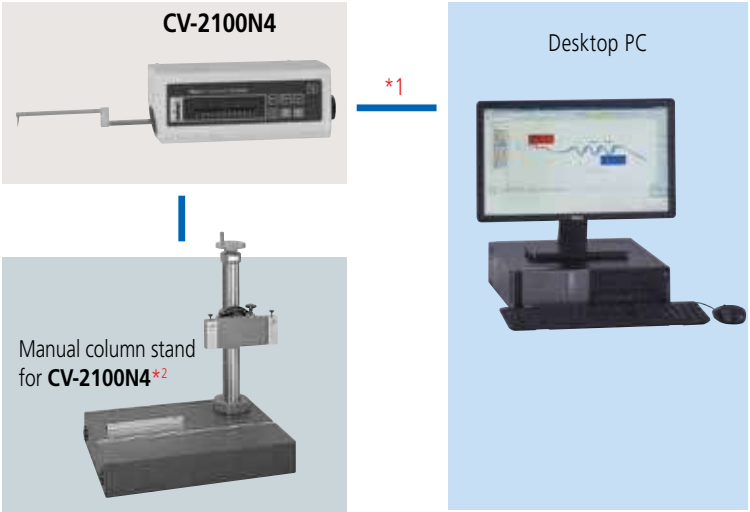

*1: If the **CV-2100N4** is operated without the dedicated manual stand, the measuring range of the Z-axis might be reduced, depending on the installation conditions. If you are considering using the **CV-2100N4** without the stand, contact your local Mitutoyo sales office for advice.

*2: Optional accessory **218-042** manual column stand

Technical Data

X1-axis
- Measuring range: 4" (100mm) (CV-2100)
- Resolution: 3.93µin (0.1µm)
- Measurement method: STVC-10Z
- Drive speed: 0-.79"/s (0-20mm/s)
- Measuring speed: .000787"/s, .2"/s (.02, 5mm/s)
- Measuring direction: Forward / Backward
- Traverse linearity: 98.4µin/4" (2.5µm/100mm) (CV-2100)
- Linear displacement: ±(100+20L)µin ±(2.5+2L/100)µm
  * L = Drive length (mm)
- Inclining range: ±45°

Z2-axis (column)
- Column type: Manual (M4 type)
- Vertical travel: 13.8" (350mm) (M4 type)

Z1-axis (detector unit)
- Measuring range: 2" (50mm)
- Resolution: 3.93µin (0.1µm)
- Measurement method: Digital arc scale
- Linear displacement: ±(100+100h)µin ±(2.5+I0.1HI)µm
- Accuracy (at 20°C) *H: Measurement height from the horizontal position within ±1" (±25mm)
- Stylus up/down operation: Arc movement
- Face of stylus: Downward
- Measuring force: 30±10mN (3gf)
- Traceable angle: Ascent: 77°, descent: 87° (using the standard stylus provided and depending on the surface roughness)

Stylus tip: Radius: 25µm, carbide tip
Base size (W x H): 23.6 x 17.7" (600 x 450mm)
Base material: Granite
Mass: 321 lbs (145.8kg) (CV-2100M4),
Power supply: 100 – 240VAC ±10%, 50/60Hz
Power consumption: 30W (main unit only)

Highly accurate arc scale



This scale directly tracks the arc trajectory of the stylus tip so that the most accurate compensation can be applied to the scale output, which leads to higher accuracy and resolution.

Contracer CV-2100

SERIES 218 — Contour Measuring Instruments

Optional Accessories

218-042: Column stand for CV-2100N4 (vertical travel: 250mm, inclination: ±45°)
218-001: Cross-travel table (XY range: 100 x 50mm)
218-011: Cross-travel table (XY range: 4″ x 2")
218-041: Cross-travel table (XY range: 50 x 25mm)
218-051: Cross-travel table (XY range: 2″ x 1")
218-002: Rugged table
176-107: Holder with clamp
218-003: Rotary vise (heavy-duty type)
172-144: Rotary vise
172-234: V-block with clamp (Max. workpiece dia.: 50mm)
172-378: V-block with clamp (Max. workpiece dia.: 25mm)
172-197: Swivel center support
172-142: Center support
172-143: Center support riser
998862: Pin gage unit for calibration (mm)
998861: Pin gage unit for calibration (inch)
———: Arms and styli (See page J-32/33.)
12AAG175: Calibration table
178-047: 3-axis adjustment table

SPECIFICATIONS

Model		CV-2100M4	CV-2100N4
Order No.		**218-643A**	**218-623A**
Measurement range	X-axis	4"(100mm)	
	Z1-axis (detector unit)	2"(50mm)	
Z2-axis (column) travel range		13.8"(350mm)	—
X-axis inclination angle		±45°	—
Resolution	X-axis	3.93µin (0.1µm)	
	Z1-axis	3.93µin (0.1µm)	
Drive method	X-axis	Motorized drive 0 - 0.79in/s (0 - 20mm/s)	
	Z2-axis (column)	Manual (quick up-and-down motion, fine feed)	—
Measuring speed		.00078 - .2"/sec (0.02 - 5mm/s)	
Linearity accuracy (X-axis horizontal orientation)		98.4µin/4in (2.5µm/100mm)	
Accuracy (20°C)	X-axis	±(100+20L) µin [±(2.5+0.02L) µm)] L = Measurement Length (mm)	
	Z1-axis	±(100+|100H|µin) [±(2.5+|0.1H|) µm] H = Measurementt height from horizontal position within 1"(±25mm)	
Measurement direction		Forward / Backward	
Measurement surface direction		Downward	
Measuring force		(3gf) (30±10mN)	
Stylus traceable angle (Standard accessory stylus)		Ascent 77°, Descent 87° (Depends on the surface condition)	
External dimensions (W×D×H)		29.3 x 17.7 x 34.8" (745×450×885mm)	25.6 x 5.63 x 5.45" (651×143×138.5mm)
Mass		321.43 lbs (145.8 kg)	12.78 lbs (5.8 kg)

DIMENSIONS

Unit: inch(mm)

CV-2100N4

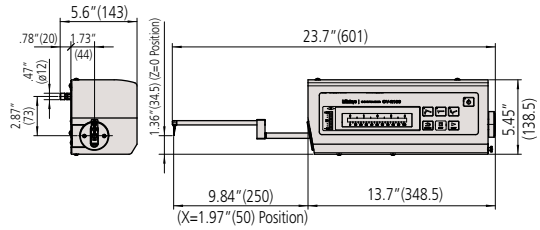

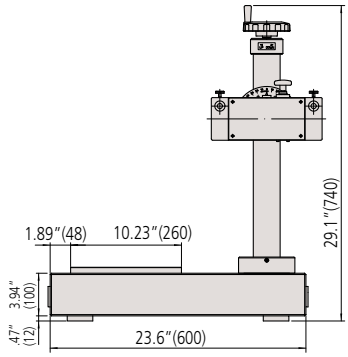

Optional Manual Column Stand for CV-2100N4

CV-2100M4

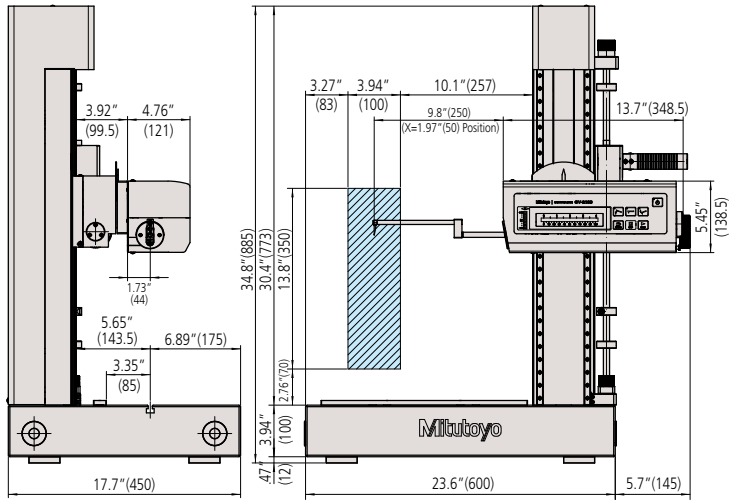

Measuring area

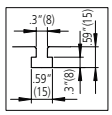

T-groove dimensions (**CV-2100M4**)

Mitutoyo

Contracer CV-3200 / CV-4500

SERIES 218 — Contour Measuring Instruments



CV-3200L4 (with options)

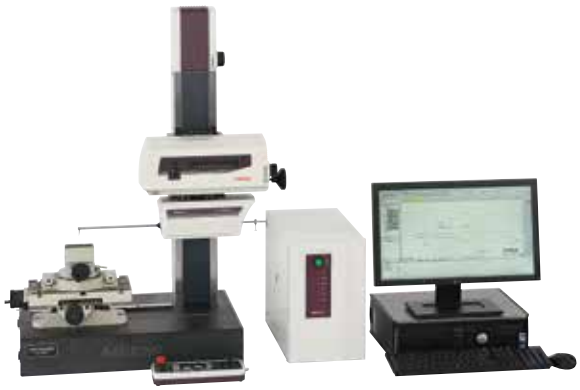

CV-3200S4 with personal computer system and software

CV-3200 FEATURES

- Dramatically increased drive speed (X axis: 80 mm/s, Z2 axis: 20 mm/s) further reduces total measurement time.
- In order to maintain the traverse linearity specification for an extended period of time, Mitutoyo has adopted highly rigid ceramic guides that combine the characteristics of smallest secular change and remarkable resistance to abrasion.
- With the support for a wide range of optional peripherals designed for use with the CNC models enables simplified CNC measurement.
- The drive unit (X-axis) and column (Z2-axis) are equipped with a high-accuracy linear encoders (ABS type on Z2-axis). This improves reproducibility of continuous automatic measurement of small holes in the vertical direction and repeated measurement of parts which are difficult to position.
- A newly designed straight arm reduces interference on the workpiece and expands the measurement range in the Z1 axis (height) direction.
- One-touch mounting and removal of the arm.
- X1-axis accuracy: ±(0.8+0.01L)µm*
  Z1-axis accuracy: ±(1.6+l2Hl/100)µm
  Designed to handle workpieces calling for high accuracy.

* CV-3200S4, H4, W4 types, L = Drive length, H = Measurement height (mm)

With the addition of a new function for continuously measuring top and bottom faces, the variable measuring force function has become more useful, enabling a wide variety of efficient, high-precision measurements.

CV-4500 FEATURES

- When combined with the double cone-end stylus (a new product with diametrically opposed contact points), the instrument can continuously measure in the upward and downward directions without the need to change the arm orientation or reset the workpiece fixturing.
- The measuring force can be switched among five levels (upward and downward) from the data-processing program (Formtracepak).
- High-precision and high-speed drive has been achieved, significantly improving measurement efficiency.
- A newly designed straight arm has reduced interference on the workpiece and expanded the measurement range in the Z1 axis (height) direction.
- One-touch mounting and removal of the arm.



Technical Data

X-axis
- Measuring range: 4" (100mm) or 8" (200mm)
- Resolution: 1.97µin (0.05µm)
- Measurement method: Reflective-type linear encoder
- Drive speed: 3.15"/s (80mm/s) and manual
- Measuring speed: .0008 - .79"/s (0.02 - 20mm/s)*

*Recommended speed: under 5mm/s
If using higher speed, stylus tip may be chipped and/or accuracy may be worse, depending on surface condition.

- Measuring direction: Forward / Backward
- Traverse linearity: 32µin/4", 80µin/8" (0.8µm/100mm, 2µm/200mm) *with the X axis in horizontal orientation
- Linear displacement accuracy (at 20°C): (31.5+10L)µin {±(.8+0.01L)µm} (CV-3200S4, H4, W4, L4); (32+10L)µin {±(0.8+0.01L)µm} (CV-4500S4, H4, W4, L4); (31.5+20L)µin {±(0.8+0.02L)µm} (CV-3200S8, H8, W8, L8); (32+20L)µin {±(0.8+0.02L)µm} (CV-4500S8, H8, W8, L8) * L = Drive length (mm)
- Inclining range: ±45°

Z2-axis (column)
- Vertical travel: 10" (300mm) or 20" (500mm)
- Resolution: 39.4µin (1µm)
- Measurement method: ABSOLUTE linear encoder
- Drive speed: 0 - 1.2"/s (0 - 30mm/s) and manual

Z1-axis (detector unit)
- Measuring range: ±1.2" (±30mm)
- Resolution: 1.57µin (.04µm) (CV-3200 series), .78µin (0.02µm) (CV-4500 series)
- Measurement method: Rotory arc encoder (CV-3200 series), (CV-4500 series)
- Linear displacement Accuracy (at 20°C): ±(63+l20Hl)µin {±(1.4+l2Hl/100)µm} (CV-3200 series); ±(32+l20Hl)µin {±(0.8+l2Hl/100)µm} (CV-4500 series) *H: Measurement height from the horizontal position (mm)
- Stylus up/down operation: Arc movement
- Face of stylus: Upward/downward
- Measuring force: 30mN (CV-3200)
- Measuring force: 10, 20, 30, 40, 50mN (CV-4500) (Specified from the data-processing program Formtracepak)
- Traceable angle: Ascent: 77°, descent: 83° (using the standard stylus provided and depending on the surface roughness)

Stylus tip: Radius: 25µm, carbide tip
Base size (W x H): 17.7 x 23.6" (450 x 600mm) or 39.4 x 17.7" (1000 x 450mm)
Base material: Granite
Power supply: 100 – 240VAC ±10%, 50/60Hz
Power consumption: 400W (main unit only)

Contracer CV-3200 / CV-4500

SERIES 218 — Contour Measuring Instruments

SPECIFICATIONS

Model No.	CV-3200S4	CV-3200H4	CV-3200W4	CV-3200L4
Order No. (inch)	**218-491-10A**	**218-492-10A**	**218-493-10A**	**218-494-10A**
Model No.	CV-4500S4	CV-4500H4	CV-4500W4	CV-4500L4
Order No. (inch)	**218-451-10A**	**218-452-10A**	**218-453-10A**	**218-454-10A**
X1-axis measuring range	4" (100mm)	4" (100mm)	4" (100mm)	4" (100mm)
Vertical travel	12" (300mm) power column	20" (500mm) power column	20" (500mm) power column	27.6" (700mm) power column
Granite base size (WxD)	23.6 x 17.7" (600 x 450mm)	23.6 x 17.7" (600 x 450mm)	39.4 x 17.7" (1000 x 450mm)	39.4 x 17.7" (1000 x 450mm)
Dimensions (main unit, WxDxH)	29.2 x 17.7 x 35.6" (741 x 450 x 905mm)	29.2 x 17.7 x 43.5" (741 x 450 x 1105mm)	45.5 x 19 x 46.3" (1156 x 482 x 1176mm)	45.5 x 19.4 x 56.5" (1156 x 492 x 1436mm)
Mass (main unit)	309 lbs (140kg)	331 lbs (150kg)	485 lbs (220kg)	595 lbs (270kg)

Model No.	CV-3200S8	CV-3200H8	CV-3200W8	CV-3200L8
Order No. (inch)	**218-496-10A**	**218-497-10A**	**218-498-10A**	**218-499-10A**
Model No.	CV-4500S8	CV-4500H8	CV-4500W8	CV-4500L8
Order No. (inch)	**218-456-10A**	**218-457-10A**	**218-458-10A**	**218-459-10A**
X1-axis measuring range	8" (200mm)	8" (200mm)	8" (200mm)	4" (100mm)
Vertical travel	12" (300mm) power column	20" (500mm) power column	20" (500mm) power column	27.6" (700mm) power column
Granite base size (WxD)	23.6 x 17.7" (600 x 450mm)	23.6 x 17.7" (600 x 450mm)	39.4 x 17.7 (1000 x 450mm)	39.4 x 17.7" (1000 x 450mm)
Dimensions (main unit, WxDxH)	30.2 x 19 x 38" (767 x 482 x 966mm)	30.2 x 19 x46" (767 x 482 x 1166mm)	45.9 x 19 x 46.3" (1166 x 482 x 1176mm)	45.9 x 19.4 x 56.5" (1166 x 492 x 1436mm)
Mass (main unit)	309 lbs (140kg)	331 lbs (150kg)	485 lbs (220kg)	595 lbs (270kg)

Collective Calibration Function

- A dedicated calibration gage enables the user to calibrate the instrument for Z-axis gain, symmetry, stylus-tip radius, etc., in a single procedure.

Calibration kit for CV-4500series

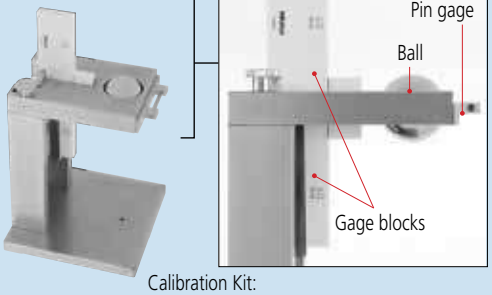

Calibration Kit:
CV-4500: **12AAQ491**
CV-3200: **12AAQ489** (not shown)

MiCAT
Mitutoyo Intelligent Computer Aided Technology
the standard in world metrology software
FORM

Software

FORMTRACEPAK V5



Measurement Control Screen



Profile Analysis Screen

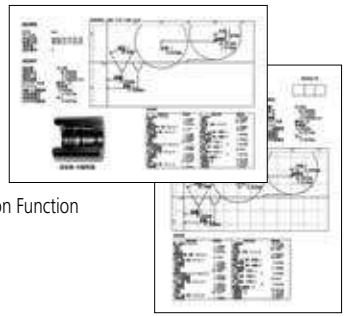

Report Creation Function

Automatic Circle/Line Application Function



Data Composition Function

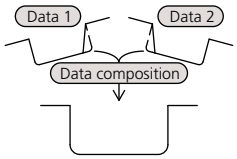

Mitutoyo

Optional Arms and Styli for Contour Measurement

For CV-2100

Straight type

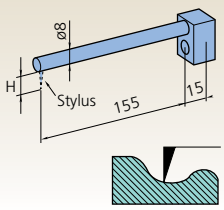

Eccentric type

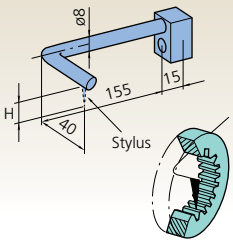

For small-hole stylus

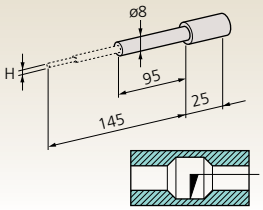

Single bevel

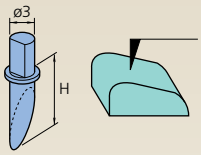

Tip angle: 12°
Tip radius: 25µm
Tip material: Carbide

Cross ground

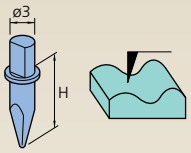

Tip angle: 20°
Tip radius: 25µm
Tip material: Carbide

Cone

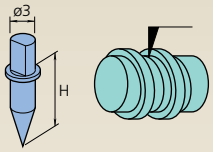

Tip angle: 30°/50°*
Tip radius: 25µm
Tip material: Carbide, Sapphire, Diamond*

Cone

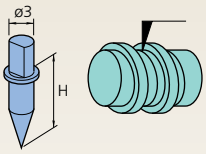

Tip angle: 20°
Tip radius: 25µm
Tip material: Carbide

Knife edge

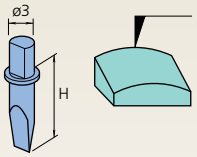

Tip angle: 20°
Edge width: 3mm
Tip radius: 25µm
Tip material: Carbide

Ball

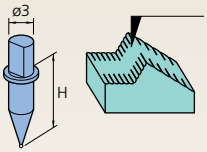

Ball dia: 1mm
Tip material: Carbide

Small hole: 932693 / 12AAE873

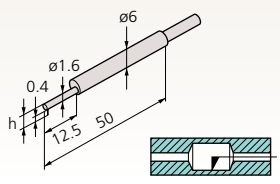

	932693	12AAE873
Tip shape:	Single bevel	Cone
Tip angle:	20°	30°
Tip radius:	25µm	25µm
Tip material:	Carbide	Carbide

Small hole: 932694 / 12AAE874

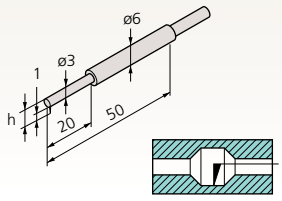

	932694	12AAE874
Tip shape:	Single bevel	Cone
Tip angle:	20°	30°
Tip radius:	25µm	25µm
Tip material:	Carbide	Carbide

Small hole: 932695 / 12AAE875

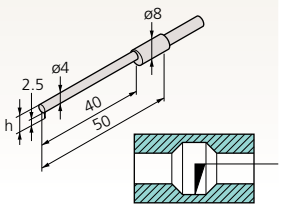

	932695	12AAE875
Tip shape:	Single bevel	Cone
Tip angle:	20°	30°
Tip radius:	25µm	25µm
Tip material:	Carbide	Carbide

List of Applicable Arms

Arm name	Order No.	Compatible stylus height
Straight type	935111	H = 6mm
	935112	H = 12mm
	935113	H = 20mm
	935114	H = 30mm
	935115	H = 42mm
Eccentric type	935116	H = 6mm
	935117	H = 12mm
	935118	H = 20mm
	935119	H = 30mm
	935120	H = 42mm
Small hole	935110	H = 0.4, 1, 2.5mm

List of Applicable Styli

Stylus name	Order No.	Stylus height
Single-bevel stylus carbide-tipped	354882	H = 6mm
	354883	H = 12mm
	354884	H = 20mm
	354885	H = 30mm
	354886	H = 42mm
Cross-ground stylus carbide-tipped	354887	H = 6mm
	354888	H = 12mm
	354889	H = 20mm
	354890	H = 30mm
	354891	H = 42mm
Cone stylus carbide-tipped tip angle 20°	12AAE865	H = 6mm
	12AAE866	H = 12mm
	12AAE867	H = 20mm
	12AAE868	H = 30mm
	12AAE869	H = 42mm
Cone stylus sapphire tipped tip angle 30° *Diamond tipped *tip angle 50°	354892	H = 6mm
	354893	H = 12mm
	354894	H = 20mm
	355129*	H = 20mm
	354895	H = 30mm
	354896	H = 42mm
Cone stylus carbide-tipped tip angle 30°	12AAA566	H = 6mm
	12AAA567	H = 12mm
	12AAA568	H = 20mm
	12AAA569	H = 30mm
	12AAA570	H = 42mm
Knife-edge stylus carbide-tipped	354897	H = 6mm
	354898	H = 12mm
	354899	H = 20mm
	354900	H = 30mm
	354901	H = 42mm
Ball stylus carbide-tipped	354902	H = 6mm
	354904	H = 20mm
	354905	H = 30mm
	354906	H = 42mm
Small-hole stylus carbide-tipped single bevel	932693	H = 2mm
	932694	H = 4mm
	932695	H = 6.5mm
Small-hole stylus carbide-tipped cone	12AAE873	H = 2mm
	12AAE874	H = 4mm
	12AAE875	H = 6.5mm

Optional Styli for Contour Measurement

CV-2100, CV-3200, CV-4500, SV-C3200, SV-C4500 and SV-C4500CNC

List of Applicable Styli

Stylus name	Order No.	Stylus height
Single-bevel cut stylus carbide-tipped	**354882**	H = 6mm
	354883	H = 12mm
	354884	H = 20mm
	354885	H = 30mm
	354886	H = 42mm
Cross-ground stylus carbide-tipped	**354887**	H = 6mm
	354888	H = 12mm
	354889	H = 20mm
	354890	H = 30mm
	354891	H = 42mm
Cone stylus carbide-tipped tip angle 20°	**12AAE865**	H = 6mm
	12AAE866	H = 12mm
	12AAE867	H = 20mm
	12AAE868	H = 30mm
	12AAE869	H = 42mm
Cone stylus sapphire tipped tip angle 30° *Diamond tipped *tip angle 50°	**354892**	H = 6mm
	354893	H = 12mm
	354894	H = 20mm
	355129*	H = 20mm
	354895	H = 30mm
	354896	H = 42mm
Cone stylus carbide-tipped tip angle 30°	**12AAA566**	H = 6mm
	12AAA567	H = 12mm
	12AAA568	H = 20mm
	12AAA569	H = 30mm
	12AAA570	H = 42mm
Knife-edge stylus carbide-tipped	**354897**	H = 6mm
	354898	H = 12mm
	354899	H = 20mm
	354900	H = 30mm
	354901	H = 42mm
Ball stylus carbide-tipped	**354902**	H = 6mm
	354904	H = 20mm
	354905	H = 30mm
	354906	H = 42mm

Single-bevel

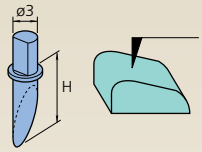

Tip angle: 12°
Tip radius: 25µm
Tip material: Carbide

Cross-ground

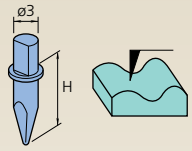

Tip angle: 20°
Tip radius: 25µm
Tip material: Carbide

Cone

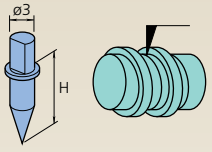

Tip angle: 30°/50°*
Tip radius: 25µm
Tip material: Carbide, Sapphire, Diamond*

Cone

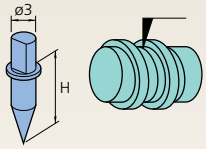

Tip angle: 20°
Tip radius: 25µm
Tip material: Carbide

Knife edge

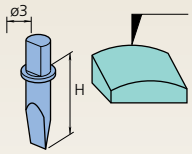

Tip angle: 20°
Edge width: 3mm
Tip radius: 25µm
Tip material: Carbide

Ball

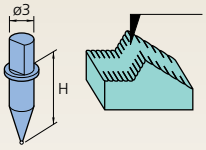

Ball dia: 1mm
Tip material: Carbide

• Any specified arm and stylus other than above listed can be custom-made for special order.

Arm and Stylus set: 12AAR588

Set for CV-4500 / SV-C4500 / SV-C4500CNC		
Part	**Part No.**	Part Description
Arm	**12AAQ762**	Eccentric arm
	12AAM103	Small-hole arm
Stylus	**354889**	Cross-ground stylus
	354882	Single-bevel cut stylus
	12AAA568	Cone stylus
	12AAM104	Small hole stylus
	12AAM106	Small hole stylus
	12AAM096	Double-sided cone stylus
	12AAM097	Double-sided cone stylus
Integrated arm and stylus	**12AAM109**	Double-sided small hole arm stylus

Arm and Stylus set: 12AAR587

Set for CV-3200 /CV-4500 / SV-C3200 / SV-C4500 / SV-C4500CNC		
Part	**Part No.**	Part Description
Arm	**12AAQ762**	Eccentric arm
	12AAM103	Small-hole arm
Stylus	**354889**	Cross-ground stylus
	354882	Single-bevel cut stylus
	12AAA568	Cone stylus
	12AAM104	Small hole stylus
	12AAM106	Small hole stylus

Mitutoyo

Optional Arms and Styli for Contour Measurement
For CV-3200, CV-4500, SV-C3200, SV-C4500 and SV-C4500CNC

● Straight arm

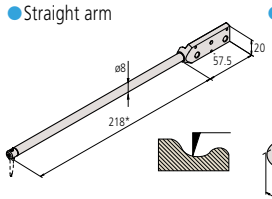

● Eccentric arm

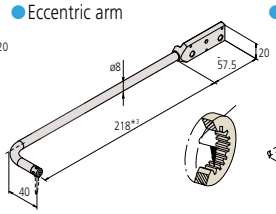

● Small-hole arm

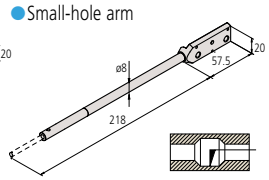

● Double cones

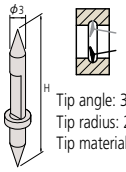

Tip angle: 30°
Tip radius: 25µm
Tip material: Carbide

● Cone

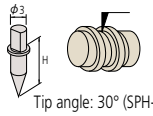

Tip angle: 30° (SPH-79: 50°)
Tip radius: 25µm
Tip material: Carbide,Sapphire
(SPH-79: Diamond)

● Small hole: **12AAM104**

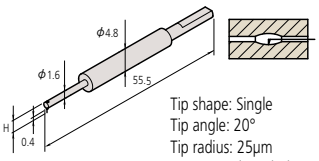

Tip shape: Single
Tip angle: 20°
Tip radius: 25µm
Tip material: Carbide

● Single bevel

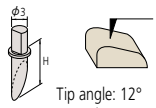

Tip angle: 12°
Tip radius: 25µm
Tip material: Carbide

● Cone

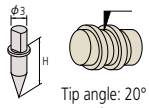

Tip angle: 20°
Tip radius: 25µm
Tip material: Carbide

● Small hole: **12AAM105**

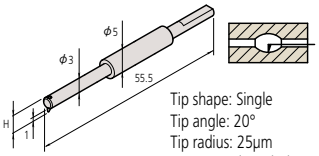

Tip shape: Single
Tip angle: 20°
Tip radius: 25µm
Tip material: Carbide

● Cross ground

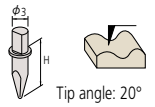

Tip angle: 20°
Tip radius: 25µm
Tip material: Carbide

● Knife-edge

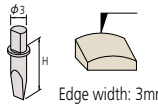

Edge width: 3mm
Tip radius: 25µm
Tip material: Carbide

● Small hole: **12AAM106**

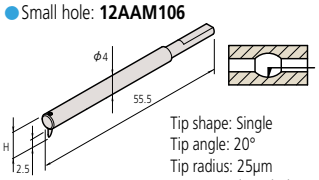

Tip shape: Single
Tip angle: 20°
Tip radius: 25µm
Tip material: Carbide

● Cone Knife-edge Ball

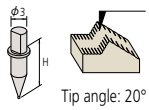

Tip angle: 20°
Tip radius: 25µm
Tip material: Carbide

List of Applicable Arms

Arm Name	Order No.
Straight type	**12AAM101**
Eccentric type	**12AAQ762**
Small hole	**12AAM103**

*1: Standard accessory
*2: Stylus for **CV-4500** series
*3: One-sided cut stylus **SPH-71**(standard accessory) mounting

List of Applicable Styli

Stylus Name	Order No.	H (mm)
Double cones stylus *4	**12AAM095** *5	20
	12AAM096	32
	12AAM097	48
Single-bevel stylus carbide-tipped	**354882**	6
	354883	12
	354884 *6	20
	354885	30
	354886	42
Cross-ground stylus carbide-tipped	**354887**	6
	354888	12
	354889	20
	354890	30
	354891	42
Cone stylus sapphire-tipped tip angle 30°	**354892**	6
	354893	12
	354894	20
	354895	30
	354896	42
Cone stylus carbide-tipped tip angle 30°	**12AAA566**	6
	12AAA567	12
	12AAA568	20
	12AAA569	30
	12AAA570	42
Cone stylus carbide-tipped tip angle 20°	**12AAE865**	6
	12AAE866	12
	12AAE867	20
	12AAE868	30
	12AAE869	42
Cone stylus diamond-tipped tip angle 50°	**355129**	20
Knife-edge stylus carbide-tipped	**354897**	6
	354898	12
	354899	20
	354900	30
	354901	42
Ball stylus carbide-tipped	**354902**	6
	354904	20
	354905	30
	354906	42
Small-hole stylus *7	**12AAM104**	2
	12AAM105	4
	12AAM106	6.5

*4: Stylus for **CV-4500** series
*5: Standard accessory of **CV-4500** series
*6: Standard accessory of **CV-3200** series
*7: Styli **SPH-21, 22,** and **23** for **CV-3100/4100** series are not available.

Arm stylus (integrated arm and stylus) only for CV-4500

Arm stylus name	Order No.	H (mm)	Tip angle
Double small-hole arm stylus *8	**12AAT469**	2.4	20°
	12AAT470	5	20°
	12AAM108	2.4	30°
	12AAM109	5	30°
	12AAM110	9	30°

*8: Arm Stylus for **CV-4500, SV-C4500 and SV-C4500CNC series.** series

● Double small-hole arm stylus: **12AAM108/12AAT469**

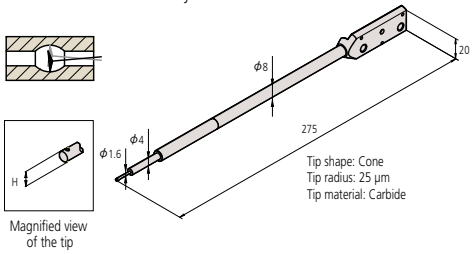

Tip shape: Cone
Tip radius: 25 µm
Tip material: Carbide

Magnified view of the tip

● Double small-hole arm stylus: **12AAM109/12AAT470**

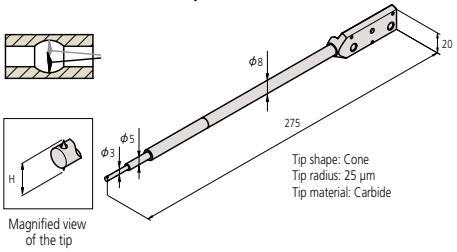

Tip shape: Cone
Tip radius: 25 µm
Tip material: Carbide

Magnified view of the tip

● Double small-hole arm stylus: **12AAM110**

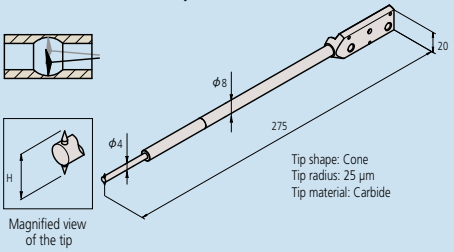

Tip shape: Cone
Tip radius: 25 µm
Tip material: Carbide

Magnified view of the tip

Optional Accessories for Automatic Measurement

Compatible with CV-3200, CV-4500 and CNC Models

Y-axis table*: 178-097

A Y-axis table for both positioning and capable of 3D surface roughness measurement when used withoptional software FTPK-PRO or MCubeMap.**

*Not supporting Y-axis measurements. ** Only for **178-096**

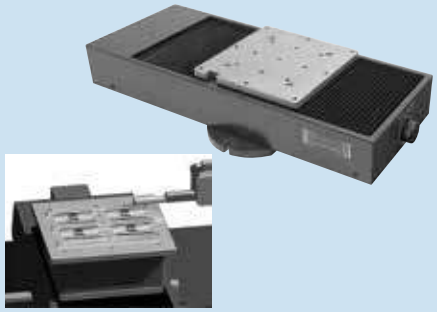

	178-097	178-096
Travel range	8" (200mm)	4" (100mm)
Resolution	1.97µin (0.05µm)	1.97µin (0.05µm)
Positioning accuracy	±3µm	±1µm
Drive speed	Max. 3.15"/s (80mm/s)	Max. .78"/s (20mm/s)
Maximum load	110 lbs (50kg)	33 lbs (50kg)
Mass	62 lbs (28kg)	68 lbs (31kg)

θ2-axis table: 178-078*

You can measure multiple points on a cylindrical workiece and automate front/rear-side measurement.

*θ2-axis mounting plate (**12AAE718**) is required when directly installing on the base of the SV-3100.

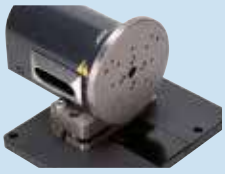

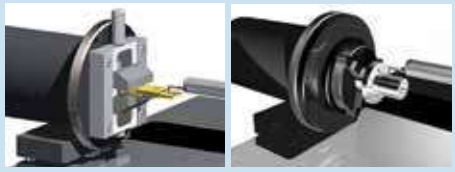

Displacement	360°
Resolution	0.0072°
Maximum load (loading moment)	4kg (343N•cm or less)
Rotational speed	Max. 18°/s
Mass	11 lbs (5kg)

Quick chuck: 211-032

This chuck is useful when measuring small workpieces. You can easily clamp them with its knurled ring.



Retention range	Inner latch	OD: ø .04 - 1.42" (1 - 36mm)
	Inner latch	ID: ø .55 - 2.76" (14 - 70mm)
	Outer latch	OD: ø .04 - 2.95" (1 - 75mm)
Dimensions		ø 4.65 x 1.61" (118 x 41mm)
Mass		2.65 lbs (1.2kg)

θ1-axis table: 12AAD975*

For efficient measurement in the axial/transverse directions. When measuring a cylindrical workpiece, automatic alignment can be performed in combination with the Y-axis table.

*θ1-axis mounting plate (**12AAE630**) is required when directly installing on the base of the SV-3100.

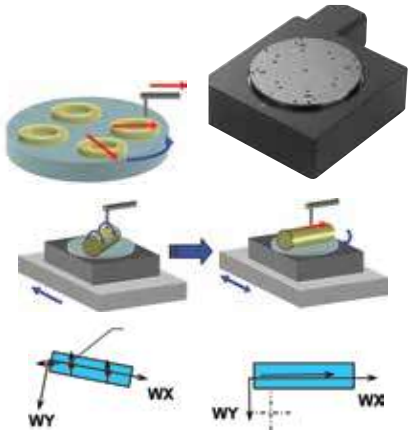

Displacement	360°
Resolution	0.004°
Maximum load	26.5 lbs (12kg)
Rotational speed	Max. 10°/s
Mass	15 lbs (7kg)

Automatic-leveling table:178-087 (SV, CV, CS3200)
Automatic-leveling table:178-037 (CNC Models)

This is a stage that performs fully automatic leveling as measurement starts, freeing the user from this troublesome operation. Fully automatic leveling can be done quickly by anyone. In addition, the operation is easy and reliable.



Inclination adjustment angle	±2°
Maximum load	7kg
Table dimensions	130 x 100mm
Mass	7.7lbs (3.5kg)

Micro-chuck: 211-031

This chuck is suitable for clamping extra-small diameter workpieces (ø1 mm or less), which cannot be retained with the centering chuck.



Retention range	OD: ø 0 -.06"(0 - 1.5mm)
Dimensions	ø 4.65" x 1.9" (118 x 48.5mm)
Mass	1.32 lbs (0.6kg)

Examples of optimal combinations of accessories for CNC models

Optional accessory / Function	Y-axis Table	θ1 Table	θ2 Table
Automatic alignment (Patented: Japan)	●	●	—
Multiple workpiece batch measurement	▲	—	—
Multiple-piece measurement in the Y-axis direction (Positioning in the Y-axis direction)	●	—	—
Multiple-piece measurement in the radius direction (Positioning in the rotating direction of XY plane)	▲	●	—
Tracking measurement in the Z-axis direction *	—	—	—
Inclined surface measurement in the X-axis direction	▲	—	—
Inclined hole inside measurement in the X-axis direction	▲	—	—
Multiple cylinder generatrix line measurement	▲	—	●
Measurement of both top and bottom surfaces	▲	—	●
Rotary positioning of large workpiece **	—	—	—
Upward/downward and frontward/backward measurement of large workpiece **	—	—	—

* : Applicable only to form/contour measurement
** : Applicable only for SV-M3000CNC

▲ Recommended ● Essential — Not necessary

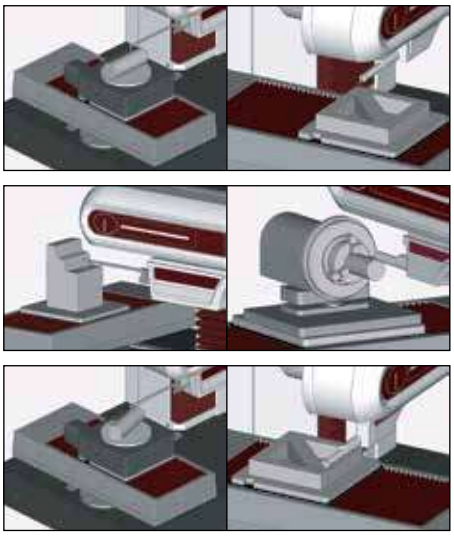

Mitutoyo

Optional Accessories for Contracer / Formtracer

Compatible with Desktop Models of Contracer and Formtracer

Cross-travel table

- Table top: 11″ x 7″(280 x 180mm)
- XY travel: 3.94″ x 1.97″(100 x 50mm)
- Max. load 110 lbs (50kg)



218-001 (mm)
218-011 (inch)

- Table top: 11″ x 5.98″(280 x 152mm)
- XY travel: 1.97″ x .98″(50 x 25mm)
- Max. load 44 lbs (20kg)

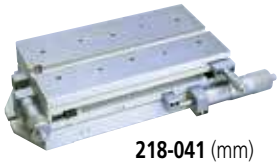

218-041 (mm)
218-051 (inch)

Rotary vise

- Two-slide jaw type.
- Max. workpiece size: ø 2.36″ (60mm)
- Minimum reading: 1°

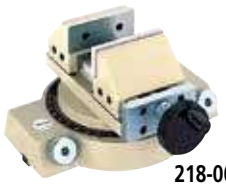

218-003

- One-slide jaw type.
- Max. workpiece size: ø 2.36″ (60mm)
- Minimum reading: 5°



172-144

Leveling table

- Table top: 5.12″ x 3.94″(130 x 100mm)
- Leveling range: ±1.5°
- Height: 1.57″ (40mm)

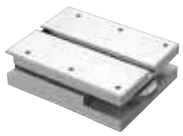

178-016

V-block with clamp

- Used with a cross-travel table or rugged table.
- Max. workpiece diameter:1.97″(50mm)
- Max. workpiece diameter: .98″ (25mm)



172-378
172-234

- Workpiece diameter: 0.039″ to 6.3″ (1mm to 160mm)
- Can be mounted on a leveling table

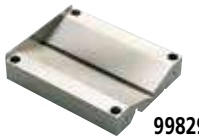

998291

Leveling table

- Table top: 5.12″ x 3.94″(130 x 100mm)
- Leveling range: ±1.5°
- XY travel: .49″ ±(12.5mm)



178-043-1 (mm)
178-053-1 (inch)

Digital leveling table

- Table top: 5.12″ x 3.94″(130 x 100mm)
- Leveling range: ±1.5°
- XY travel: .49″ ±(12.5mm)



178-042-1 (mm)

Three-axis adjustment table

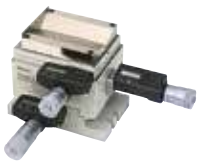

178-047
(V-block not included)

Precision vise

- Max. workpiece size: 1.42″ (36mm)
- Can be mounted on a leveling table.

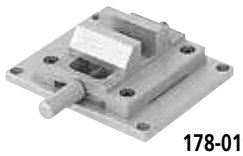

178-019

Holder with clamp

- Used with a cross-travel table or rugged table.
- Max. workpiece height: 1.38″ (35mm)

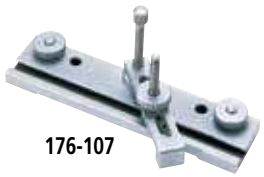

176-107

Swivel center support

- Max. workpiece diameter: 3.15″ (80mm)*
  *2.56″ (65mm) when swiveled 10°
- Max. workpiece length: 5.51″(140mm)



172-197

Center support

- Max. workpiece diameter: 4.72″(120mm)
- 2.36″ (60mm) riser is optional (**172-143**)



172-142

Center support riser

- Used with a center support.
- Max. workpiece diameter: 9.45″ (240mm)



172-143

Drive unit tilting function (Patent pending: Japan)	Large θ Table	Rotary-type detector holder
		
▲	—	—
—	—	—
—	—	—
—	—	—
—	—	—
●	—	—
●	—	—
—	—	—
—	—	—
—	●	—
—	—	●

●: Essential ▲: Recommended
—: Not necessary

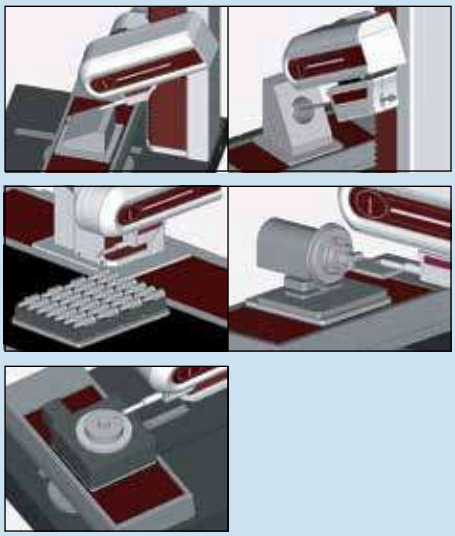

Three-axis adjustment table

Order No.	178-047
Table top	5.11 x 3.94" (130 x 100mm)
Workpiece weight	33lbs. (15kg) at max.
Workpiece diameter	.04 - 6.3" (1 - 160mm)
Leveling range	±1.5°
Swivel range	±2°
Y-axis adjustment	±0.5" (±12.5mm)
Height	6" (152.5mm)
Mass	19.8lbs. (9kg)
Remarks	V-block (**998291**) not included

Traceable Angle

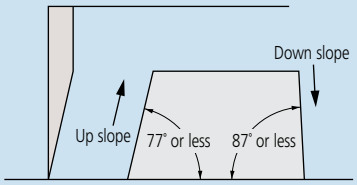

The maximum angle at which a stylus can trace upward or downward along the contour of a workpiece, in the stylus travel direction, is referred to as the traceable angle. A one-sided sharp stylus with a tip angle of 12° (as in the above figure) can trace a maximum 77° of up slope and a maximum 87° of down slope. For a conical stylus (30° cone), the traceable angle is smaller. An up slope with an angle of 77° or less overall may actually include an angle of more than 77° due to the effect of surface roughness. Surface roughness also affects the measuring force.
For model CV-3200/4500, the same type of stylus (SPH-71: one-sided sharp stylus with a tip angle of 12°) can trace a maximum 77° of up slope and a maximum 83° of down slope.

Compensating for Stylus Tip Radius

A recorded profile represents the locus of the center of the ball tip rolling on a workpiece surface. (A typical radius is 0.025mm.) Obviously this is not the same as the true surface profile so, in order to obtain an accurate profile record, it is necessary to compensate for the effect of the tip radius through data processing.

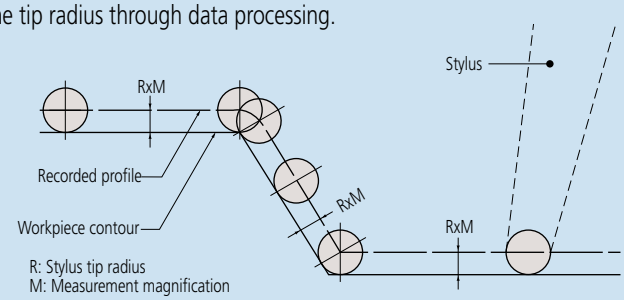

If a profile is read from the recorder through a template or scale, it is necessary to compensate for the stylus tip radius beforehand, according to the applied measurement magnification.

Compensating for Arm Rotation

The stylus is carried on a pivoted arm so it rotates as the surface is traced and the contact tip does not track purely in the Z direction. Therefore, it is necessary to apply compensation in the X direction to ensure accuracy. There are three methods of compensating for arm rotation.

1: Mechanical compensation
2: Electrical compensation
3: Software processing. To measure a workpiece contour that involves a large displacement in the vertical direction with high accuracy, one of these compensation methods needs to be implemented.

Accuracy

As the detector units of the X and Z axes incorporate scales, the magnification accuracy is displayed not as a percentage but as the linear displacement accuracy for each axis.

Overload Safety Cutout

If an excessive force (overload) is exerted on the stylus tip due, perhaps, to the tip encountering a too-steep slope on a workpiece feature, or a burr, etc., a safety device automatically stops operation and sounds an alarm buzzer. This type of instrument is commonly equipped with separate safety devices for the tracing direction (X axis) load and vertical direction (Y axis) load.
For model CV-3200/4500 a safety device functions if the arm comes off the detector mount.

Simple or Complex Arm Guidance

In the case of a simple pivoted arm, the locus that the stylus tip traces during vertical movement (Z direction) is a circular arc that results in an unwanted offset in X, for which compensation has to be made. The larger the arc movement, the larger the unwanted X displacement (δ) that has to be compensated. (See figure below.) The alternative is to use a complex mechanical linkage arrangement to obtain a linear translation locus in Z, and, therefore, avoid the need to compensate in X.

Z-axis Measurement Methods

Though the X axis measurement method commonly adopted is by means of a digital scale, the Z axis measurement divides into analog methods (using a differential transformer, etc.) and digital scale methods.
Analog methods vary in Z-axis resolution depending on the measurement magnification and measuring range. Digital scale methods have fixed resolution.
Generally, a digital scale method provides higher accuracy than an analog method.

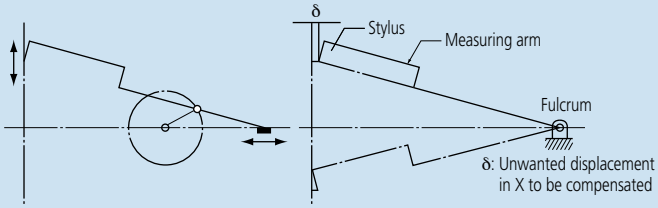

Contour Analysis Methods

You can analyze the contour with one of the following two methods after completing the measurement operation.

1. Data processing section

The measured contour is input into the data processing section in real time and a dedicated program performs the analysis using the mouse and/or keyboard. The angle, radius, step, pitch and other data are directly displayed as numerical values.

2. Analysis program

Analysis combining coordinate systems can be easily performed. The graph that goes through stylus radius correction is output to the printer as the recorded profile.

Tolerancing with Design Data

Measured workpiece contour data can be compared with design data in terms of actual and designed shapes rather than just analysis of individual dimensions. In this technique each deviation of the measured contour from the intended contour is displayed and recorded. Also, data from one workpiece example can be processed so as to become the master design data to which other workpieces are compared. This function is particularly useful when the shape of a section greatly affects product performance, or when its shape has an influence on the relationship between mating or assembled parts.

Best-fitting

If there is a standard for surface profile data, tolerancing with design data is performed according to the standard. If there is no standard, or if tolerancing only with shape is desired, best-fitting between design data and measurement data can be performed.

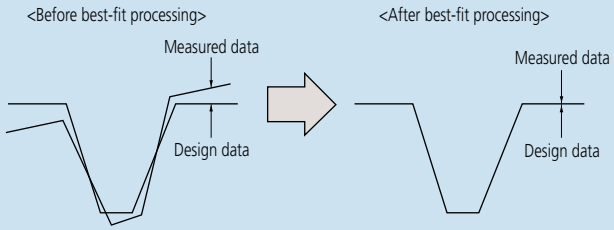

The best-fit processing algorithm searches for deviations between both sets of data and derives a coordinate system in which the sum of squares of the deviations is a minimum when the measured data is overlaid on the design data.

Data Combination

Conventionally, if tracing a complete contour is prevented by stylus traceable-angle restrictions then it has to be divided into several sections that are then measured and evaluated separately. This function avoids this undesirable situation by combining the separate sections into one contour by overlaying common elements (lines, points) onto each other. With this function the complete contour can be displayed and various analyses performed in the usual way.

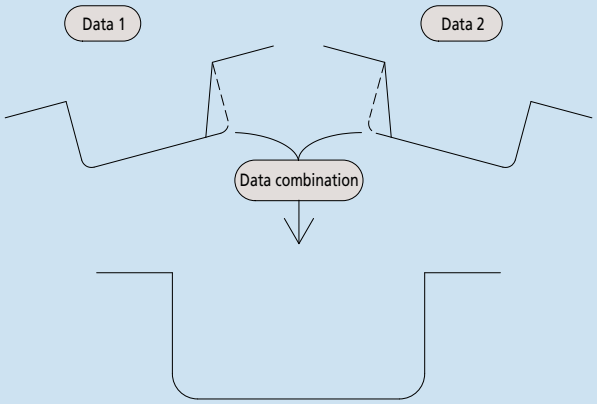

Measurement Examples

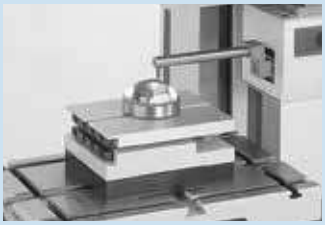
Aspheric lens contour


Inner/outer ring contour of a bearing


Internal gear teeth


Female thread form


Male thread form

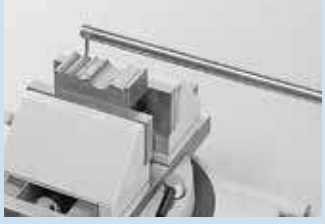
Gage contour

Roundtest RA-120 / 120P

SERIES 211 — Roundness Measuring Instruments

Technical Data

Turntable
- Rotational accuracy: Radial: (0.04+6H/10000)µm (H: Probing height (mm))
  Axial: (0.04+6X/10000)µm (X: Distance from rotation center)
- Rotating speed: 6rpm
- Table top diameter: ø 1.96" (150mm)
- Centering range: ±.12" (3mm)
- Leveling range: ±1°
- Maximum probing diameter: ø 11" (280mm)
- Maximum workpiece diameter: ø 17.3" (440mm)
- Maximum workpiece weight: 55 lbs (25kg)

Vertical column (Z-axis)
- Vertical travel: 11" (280mm)
- Feeding: 1.18" (30mm)/rev. (coarse), 0.039" (1mm)/rev. (fine)
- Maximum probing height: 11" (280mm) from the turntable top
- Maximum probing depth: 3.94" (100mm) (min. ID: 1.18"(30mm)

Horizontal arm (X-axis)
- Horizontal travel: 65" (165mm) (Including a protrusion of 1" (25mm) the turntable rotation center)

Probe and stylus
- Measuring range: ±1000µm
- Measuring force: 100mN±30mN
- Standard stylus: 12AAL021, carbide ball, ø1.6mm
- Measuring direction: Two directional
- Stylus angle adjustment: ±45° (with graduations)

Data analysis unit:
- Processing unit: Built-in (PC with Roundpak)*
- Data sampling points: 3,600 points/rotation
- Data analysis items:
  Roundness, Coaxiality, Concentricity, Flatness, Circular runout (radial), Circular runout (axial), Squareness (against axis), Squareness (against plane), Thickness deviation, Parallelism
- Reference circles for roundness evaluation:
  LSC, MZC, MIC, MCC
- Recording device:
  Built-in thermal line printer (optional external printer)*
- Recording magnification:
  X5 to X200,000, Auto (X1 to X500,000)*
- Roughness component reduction:
  Low pass filter, band pass filter
- Filter type:
  2CR-75%, 2CR-50%, 2CRPC-75% (phase corrected), 2CRPC-50% (phase corrected), Gaussian, filter OFF
- Cutoff value;
  15upr, 50upr, 150upr, 500upr, 15-150upr, 15-500upr, 50-500upr, Manual setting*
- Number of measuring sections
  Max. 5-section (100-section)*

*RA-120P

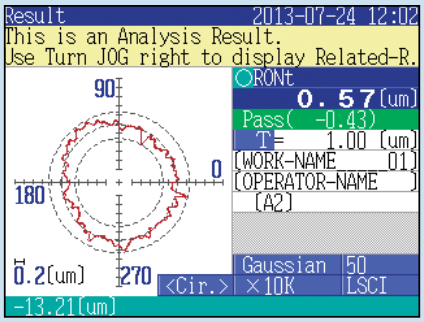

Large color LCD display for RA-120 models

The Roundtest RA-120 / 120P are a compact, affordable, and simple-to-use device for measuring part geometry on the shop floor. It also provides such superb data analysis capabilities as required with laboratory roundness measuring instruments and has a ±1000µm wide range detector and precision turntable with excellent rotation accuracy.

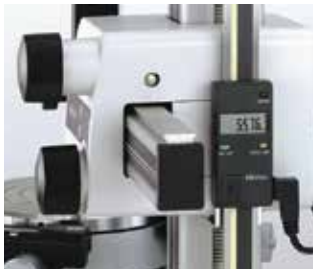

Z-axis scale unit



Optional X-axis stop

The RA-120 is a dedicated processor-based model which controls all operations via the control panel incorporated in the main unit.



RA-120

Order No.: 211-544A (with mechanical mic-heads)
Order No.: 211-543A (with DAT function, inch/mm)

SPECIFICATIONS

Model No.	RA-120*	RA-120D	RA-120P	RA-120PD
Order No.	**211-544A**	**211-543A**	**211-547A**	**211-546A**

* Does not include Z-axis scale unit.

The RA-120P is a PC-based model which controls all operations via ROUNDPAK software (optional).



RA-120P

Order No.: 211-547A (with mechanical mic-heads)
Order No.: 211-546A (with DAT function, inch/mm)

MiCAT
Mitutoyo Intelligent Computer Aided Technology
the standard in world metrology software
FORM

Mitutoyo

Roundtest RA-120 / 120P

SERIES 211 — Roundness Measuring Instruments

DAT (Digital Adjustment Table) function

The turntable digitally displays the centering and leveling adjustments, turning what used to be a difficult task into one that is simple enough for even new operators to perform.

1. Preliminary measurement of two cross sections: A and B.

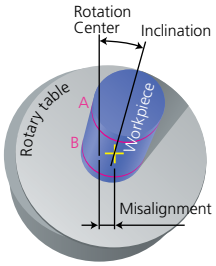

2. Following preliminary measurement, the centering and leveling adjustment values are displayed on the monitor.

3. Manipulate the digital micrometer heads of the rotary table so that the adjustment values displayed on the monitor are realized.

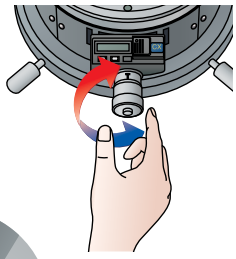

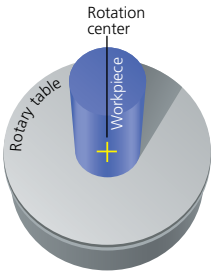

4. Centering and leveling are complete.
   Centering range: ±3mm
   Leveling (inclination) range: ±1°

DIMENSIONS

External dimensions

Unit: mm

: Measuring area

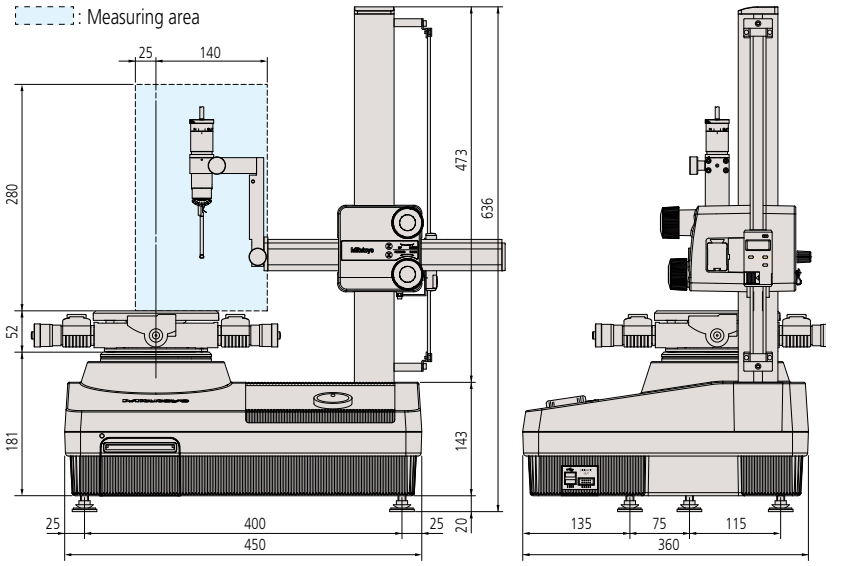

Turntable top view

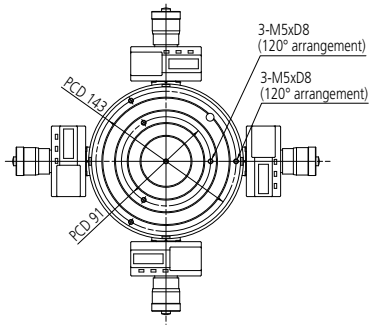

Installation floor plan

▼Power inlet
▽Air inlet

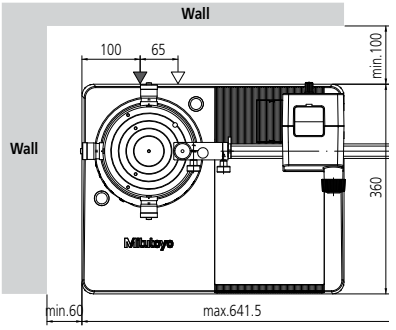

Functions
- Notched workpiece measurement
- Recalculation of datum/measured data
- Limaçon function compensates for eccentricity
- Rotation of 3D display**
- Real-time display**
- Simplified layout (divided layout)**
- Hair line, auxiliary line, hidden line, fill line**
- Color setting of measured data**
- Offsetting of recorded profile generation**
- Zooming of recorded profile**
- Data deletion**
- Graph analysis (displacement/angle between measured points)**
- Power spectrum analysis**
- Gear tooth analysis**
- Harmonic analysis**
- Text data output (via CSV format)**

**Function of ROUNDPAK software

Air supply
Air pressure: 390kPa
Air consumption: 30L/min.
Power supply: 100V AC – 240V AC, 50/60Hz
Dimensions (W x D x H): 17.7" x 14.2" x 25" (450 x 360 x 636mm)
Mass: 70.5 lbs (32kg) (main unit), 4.4 lbs (2kg) (air regulator)

Optional Accessories

211-032: Quick chuck (OD: 1 - 79mm, ID: 16 - 69mm)
211-014: Three-Jaw chuck (OD: 2 - 78mm, ID: 25 - 68mm)
211-031: Micro-chuck (OD: 1.5mm max.)
356038: Auxiliary stage for a low-height workpiece
211-016: Reference hemisphere
211-045: Magnification checking gage
997090: Gage block set for calibration
12AAH320: X-axis stop
211-013: Vibration damping stand
12AAH433: Z-axis scale unit for RA-120
———: Interchangeable styli (See page J-49.)

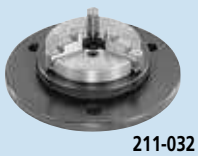
211-032

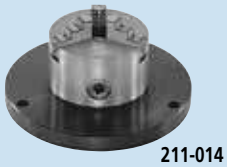
211-014


211-031

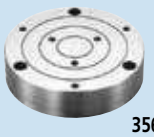
356038


211-016


997090

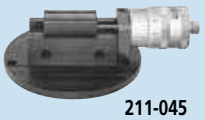
211-045

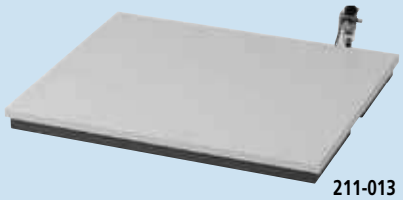
211-013

CONSUMABLE PARTS

12AAH181: Printer paper — 10 rolls/set
358592: Element for air filter — 1 pc./set
358593: Element for air regulator — 10 pcs./set

Roundtest RA-1600 / RA-1600M

SERIES 211 — Roundness/Cylindricity Measuring System

Technical Data

Turntable
- Rotational accuracy (radial): (0.02+6H/10000)µm (RA-1600)
- Rotational accuracy (axial): (0.02+6X/10000)µm (RA-1600)
- Rotational accuracy (radial): (0.03+6H/10000)µm (RA-1600M)
- Rotational accuracy (axial): (0.03+6X/10000)µm (RA-1600M)

  H: Probing height (mm), X: Probing radius (mm)
- Rotational speed: 4, 6, 10rpm
- Table top diameter: ø5.9"(150mm)
- Centering range: ±3mm (with DAT function)
- Leveling range: ±1° (with DAT function)
- Maximum probing diameter: ø11"(ø280mm)
- Maximum workpiece diameter: ø22"(ø560mm)
- Maximum table loading: 55lbs (25kg)

Vertical column (Z-axis)
- Vertical travel: 11.8"(300mm)
- Straightness (in narrow range: 0.20µm / 100mm (RA-1600)
- Straightness (in entire range): 0.30µm / 300mm (RA-1600)
- Straightness (in narrow range: 0.40µm / 100mm (RA-1600M)
- Straightness (in entire range): 0.80µm / 100mm (RA-1600M)
- Parallelism with turntable axis: 1.5µm / 300mm
- Positioning speed: Max. 15mm/s
- Measuring speed: 0.5, 1, 2, 5mm/s
- Maximum probing height (ID/OD): 11.8"(300mm)*1
- Maximum probing depth: 91mm (over ø32)
  3.6"(over ø1.26")((91mm (over ø32))
  1.97"(over ø0.27")((50mm (over ø7))

Horizontal arm (X-axis)
- Horizontal travel: 6.5"(165mm) (From table axis -1~±5.5" ((-25mm – ±140mm))
- Positioning speed: Max. 15mm/s
- Measuring speed: 0.5, 1, 2, 5mm/s
- X-axis straightness: 2.7µm/140mm (RA-1600)
- X-axis parallelism to turntable axis: 1.6µm/140mm (RA-1600)

Probe and stylus
- Measuring range: ±400µm / ±40µm / ±4µm
- Measuring force: 10–50mN (5 level switching)
- Standard stylus: **12AAL021**, carbide ball, ø1.6mm
- Measuring direction: Bi-directional
- Stylus angle adjustment: ±45° (with graduations)

Air supply
- Air pressure: 0.39MPa (4kgf/cm²)
- Air consumption: 22L/min.

Power supply: 100V AC – 240V AC, 50/60Hz

Dimensions (W x D x H): 35 x 19.3 x 33"(890 x 490 x 840mm)

Mass: 375lbs (170kg)

*1 Use an optional auxiliary stage for measuring a workpiece whose height is 20mm or less.

ROUNDPAK

The latest roundness/cylindrical form analysis program

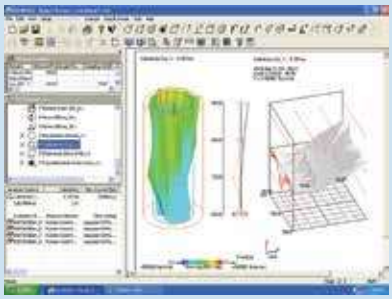

MiCAT
Mitutoyo Intelligent Computer Aided Technology
the standard in world metrology software
FORM

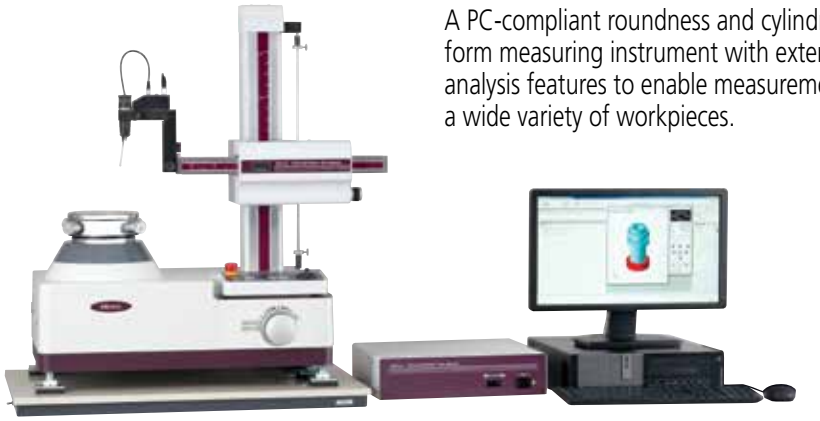

RA-1600 / RA-1600M
with personal computer system and software

A PC-compliant roundness and cylindrical-form measuring instrument with extensive analysis features to enable measurement of a wide variety of workpieces.

Spiral Measurement/Analysis

The spiral-mode measurement function combines table rotation and rectilinear action allowing cylindricity, coaxiality, and other measurement data to be loaded as a continuous data set.



Spiral-mode cylinder measurement

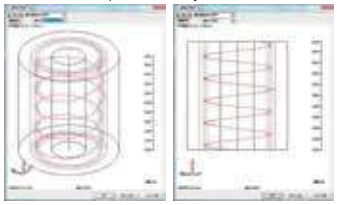

Safety mechanism provided as a standard feature

A collision-sensing function has been added to the detector unit (when it is in the vertical orientation) to prevent collision in the Z-axis direction. Additionally, an accidental collision prevention function, which stops the system when the detector displacement exceeds its range, has been added. When an accidental touch is detected, the dedicated analysis software (ROUNDPAK) senses the error and automatically stops the system.

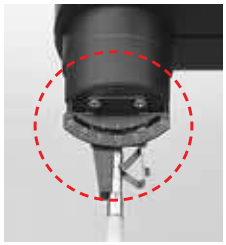

Measurement Through X-axis Tracking

Measurement while tracing is possible through a built-in linear scale in the X-axis. This type of measurement is useful when displacement due to form variation exceeds the measuring range of the detector, and X-axis motion is necessary to maintain contact with the workpiece surface.



Continuous Internal/External Diameter Measurement

Continuous internal/external diameter measurement is possible without changing the detector position.

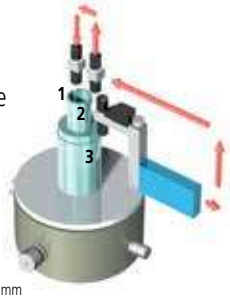

1), 2) : External diameter measurement
3) : Internal diameter measurement
➡ : Displacement
3) = inner diameter: Up to ø50 mm

Mitutoyo

Roundtest RA-1600 / RA-1600M

SERIES 211 — Roundness/Cylindricity Measuring System

Centering and Leveling Function

The turntable displays centering and leveling adjustments digitally, making this challenging task simple enough for even a new operator to perform.

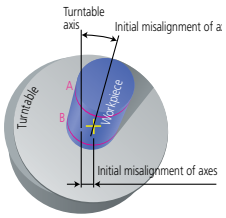

1. Preliminary measurement of two cross sections: A and B.

2. Following preliminary measurement, the centering and leveling adjustment values are displayed on the monitor.

For RA-1600

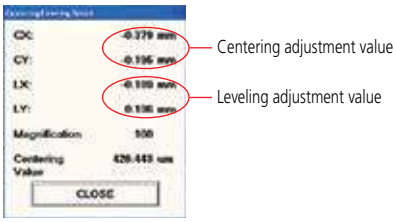

For RA-1600M



3. By adjusting the micrometer heads for the rotary table, the adjustment values or level meter displayed on the monitor can be achieved.

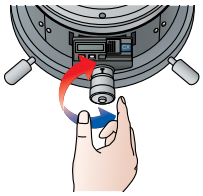

4. Centering and leveling are complete.
   Centering range: ±3mm
   Leveling (inclination) range: ±1°

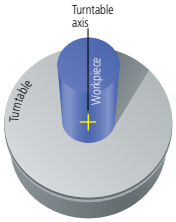

SPECIFICATIONS

Model No.	RA-1600	RA-1600M
Order No. (inch/mm)	**211-733A**	**211-724A**
Mic Heads	Digimatic	Mechanical

DIMENSIONS

Unit: mm

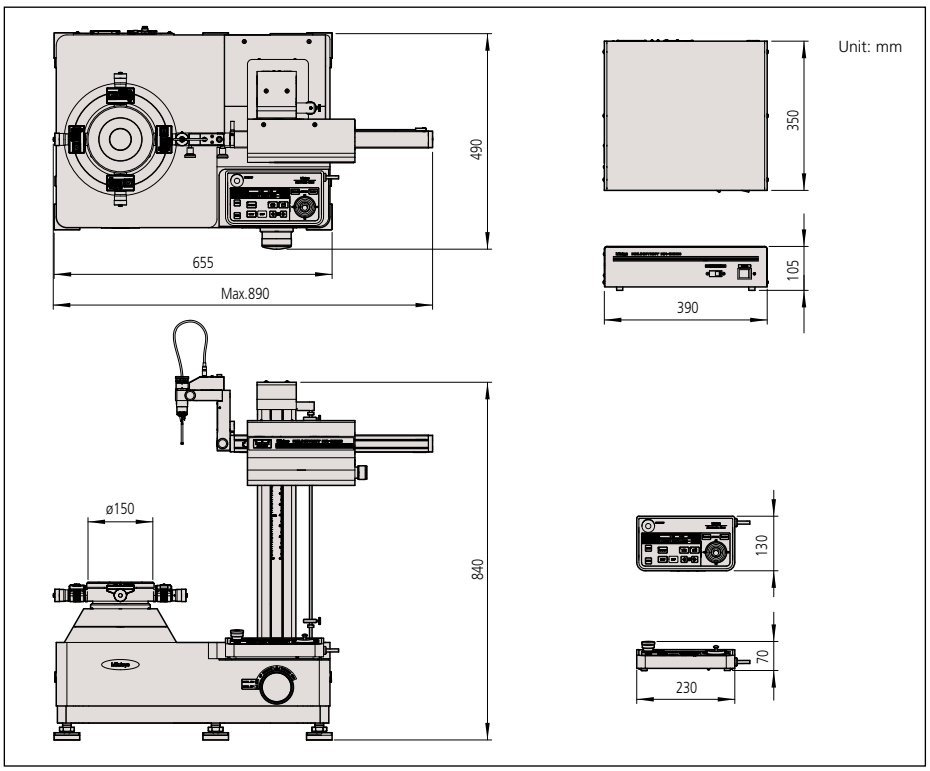

Optional Accessories

350850: Cylindrical square
356038: Auxiliary stage for a low-height workpiece
12AAF203: 2x extension detector holder
12AAF204: Auxiliary detector holder for a large-diameter workpiece
12AAL090: Sliding detector holder
211-045: Magnification checking gage
211-014: Chuck (OD: ø2 - 78mm, ID: ø25 - 68mm)
211-032: Quick chuck (OD: ø1 - 79mm, ID: 16 - 69mm)
211-031: Micro-chuck (OD: ø0.1 - 1.5mm max.)
178-025: Vibration isolator (Desktop type)
64AAB213: Vibration isolation workstation
12AAL019: Side table for PC
———: Interchangeable styli (See page J-49.)

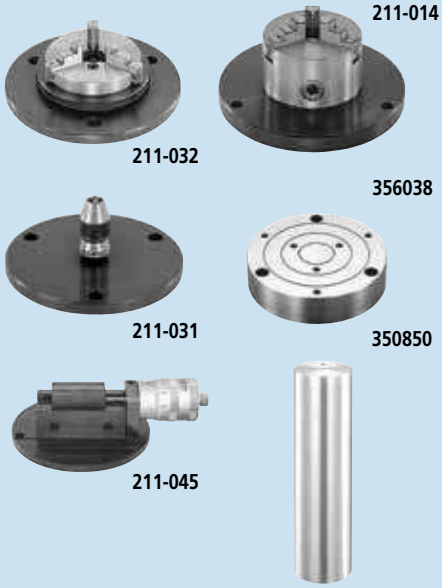

Sliding detector-unit holder (Option) 12AAL090

The detector-unit holder is equipped with a sliding mechanism, enabling one-touch measurement of a workpiece with a deep hole having a thick wall, which has been difficult with the conventional standard arm.



Sliding distance: 4.4" (112mm)

The detector-unit holder can be stopped at a position sufficiently higher than the workpiece along the Z-axis, and then lowered and positioned to make measurements.
Furthermore, internal/external diameters can be easily measured with the continuous internal/external diameter measurement function*.

*: See page 41 for details about the continuous ID and OD measuring function.

Technical Data

Turntable
Rotational accuracy (radial): {(0.02+3.5H/10000)µm}
Rotational accuracy (axial): {(0.02+3.5R/10000)µm}
H: Probing height (mm), R: Probing radius (mm)
- Rotating speed: 2, 4, 6, 10rpm
- Tabletop diameter: ø9.2" (235mm) AS / AH models; ø 7.9" (200mm) DS / DH models
- Centering range: ±3mm (±5mm: DS / DH models)
- Leveling range: ±1°
- Maximum probing diameter: ø 11.8" (300mm)
- Maximum workpiece diameter: ø22.8" (580mm)
- Maximum workpiece weight: 66 lbs (30kg)

Vertical column (Z-axis)
- Vertical travel: 11.8" (300mm) (22.8" (500mm): AH/DH models)
- Straightness (λc2.5): 0.10µm / 100mm, 0.15µm / 300mm (0.25µm / 500mm: AH / DH models)
- Parallelism with rotating axis: 0.7µm / 300mm (1.2µm / 500mm: AH / DH models)
- Positioning speed: Max. 50mm/s
- Measuring speed: 0.5, 1, 2, 5mm/s
- Maximum probing height: 11.8" (300mm) (OD / ID) [22.8" (500mm): AH / DH models)
- Maximum probing depth: over ø32: 85mm (w/standard stylus) over ø7: 50mm (w/standard stylus)

Horizontal arm (X-axis)
- Horizontal travel: 6.9" (175mm) (Including a protrusion of 1" (25mm) the turntable rotation center)
- Straightness (λc2.5): 0.7µm / 150mm
- Squareness with rotating axis: 1.0µm / 150mm
- Positioning speed: Max. 30mm/s with joystick operation
- Measuring speed: 0.5, 1, 2, 5mm/s

Probe and stylus
- Measuring range: ±400µm/±40µm/±4µm (±5mm: tracking range)
- Measuring force: 10mN~50mN (in 5 steps)
- Standard stylus: **12AAL021**, carbide ball, ø1.6mm
- Measuring direction: Two directional
- Stylus angle adjustment: ±45° (with graduations)

Data analysis system
- Analysis software: Roundpak
- Filter type: 2CRPC-75%, 2CRPC-50%, 2CR-75% (non-phase corrected), 2CR-50% (non-phase corrected), Gaussian, filter OFF
- Cutoff value; 15upr, 50upr, 150upr, 500upr, 1500upr, 15-150upr, 15-500upr, 15-1500upr, 50-500upr, 50-1500upr, 150-1500upr, Manual setting
- Reference circles for roundness evaluation: LSC, MZC, MIC, MCC

Air supply
- Air pressure: 390kPa (4kgf/cm²)
- Air consumption: 30L/min.

Power supply: 100V AC – 240V AC, 50/60Hz
Dimensions (W x D x H): 26.3 x 20 x 35.4" (667 x 510 x 900mm) 26.3 x 20 x 43.3" (667 x 510 x 1100mm: AH / DH models)
Mass: 396 lbs (180kg) 440 lbs (200kg) AH / DH models

Printout

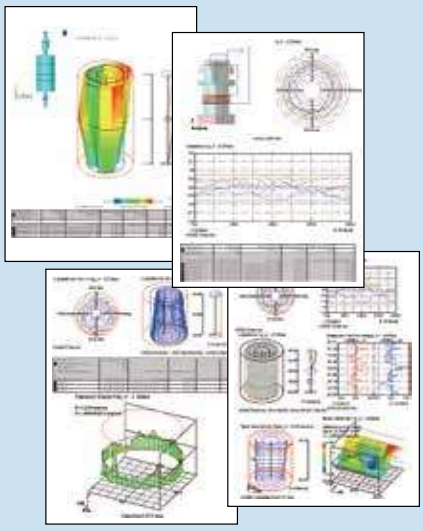

Roundtest RA-2200AS / DS / AH / DH

SERIES 211 — Roundness / Cylindricity Measuring System

The RA-2200 provides high accuracy, high speed and high performance in roundness measurement. The fully-automatic, or DAT (Digital Adjustment Table), function-aided manual workpiece centering and leveling turns what used to be a difficult task into one that is simple enough for even new users to perform. This facilitates substantial reductions in overall measurement time. The RA-2200 system comes complete with powerful data analysis software ROUNDPAK, which requires only simple manipulation using a mouse and icons, achieving enhanced functionality and ease of operation.

RA-2200AS with personal computer system and software

* Shown with optional vibration isolator and side table for PC



Highly accurate and easy-to-use turntable

With extremely high rotational accuracy, both in the radial and axial directions, the turntable allows high accuracy flatness testing to be performed in addition to roundness and cylindricity measurements.

Incorporating an automatic centering/leveling turntable (A.A.T.), the top-of-the-line RA-2200AS/AH models relieve the operator of the bothersome task of workpiece centering and leveling.

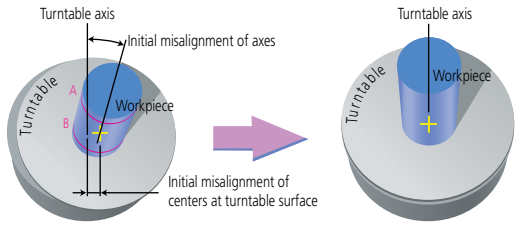

Preliminary measurement of two cross-sections A and B.

Preliminary measurement is followed by automatic centering and leveling.

A guidance system (D.A.T.) is incorporated into the turntables on the RA-2200DS/DH models to help the operator perform manual centering and leveling smoothly and simply.

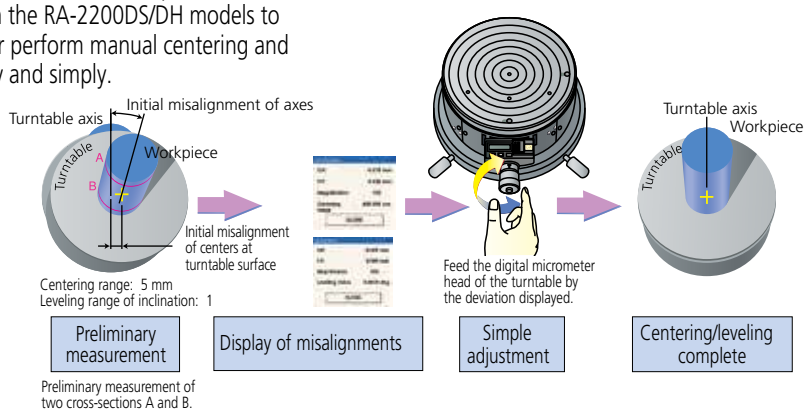

Preliminary measurement of two cross-sections A and B.

Mitutoyo

Roundtest RA-2200AS / DS / AH / DH

SERIES 211 — Roundness / Cylindricity Measuring System

Greater productivity by continuous measurement

Both the OD and ID of a workpiece* can be measured in succession without the need for changing the traverse direction of the stylus.

*Inside diameter up to 50 mm.

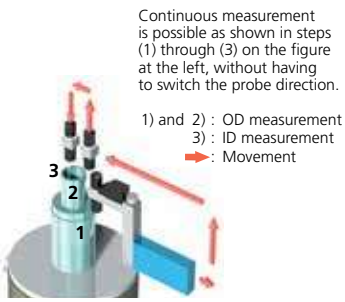

Continuous measurement is possible as shown in steps (1) through (3) on the figure at the left, without having to switch the probe direction.

1) and 2) : OD measurement
3) : ID measurement
➡: Movement

Highly repeatable measurements with high-accuracy scales Mitutoyo linear scales are used in the X/Z drive unit to guarantee the high precision positioning so vital for repetitive measurement.

Surface roughness measurement function (Surface roughness unit: option)

A surface roughness detector, compliant with the relevant International Standards, can be mounted in place of the roundness measuring detector. This creates a multiple sensor system that can not only test the geometrical roundness/ cylindricity of a surface but also the roughness of that surface as well.



SPECIFICATIONS

Model No.	RA-2200AS	RA-2200DS	RA-2200AH	RA-2200DH
Order No.	**211-511A** (mm/inch)	**211-514A** (inch)	**211-512A** (mm/inch)	**211-516A** (inch)
Effective table diameter	9.25" (235mm)	8" (200mm)	9.25" (235mm)	8" (200mm)
Centering/leveling adjustment	A.A.T.	D.A.T.	A.A.T.	D.A.T.
Centering range	±0.118" (±3mm)	±0.197" (±5mm)	±0.118" (±3mm)	±0.197" (±5mm)
Column travel	12" (300mm) (standard column)		20" (500mm) (high column)	
Basic unit mass	396 lbs. (180kg)		440 lbs. (200kg)	

DIMENSIONS

Unit: mm

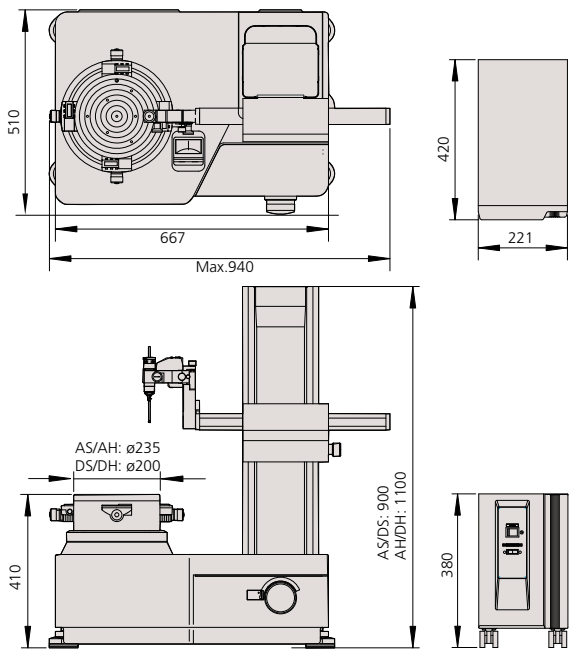

Optional Accessories

350850: Cylindrical square
356038: Auxiliary stage for a low-height workpiece
12AAF203: Extension probe holder (2X higher)
12AAF204: Auxiliary probe holder for a large diameter workpiece
211-045: Magnification checking gage
211-014: Chuck (OD: 1 - 85mm, ID: 33 - 85mm)
211-032: Quick chuck (OD: 1 - 75mm, ID: 14 - 70mm)
211-031: Micro-chuck (OD: 1.5mm max.)
178-025: Vibration isolator
178-024: Stand for vibration isolator
———: Interchangeable styli (See page J-49.)
12AAK110: Vibration isolator
12AAK120: Monitor arm
12AAL019: Side table for PC
12AAF353: Surface roughness detector holder

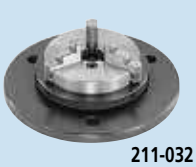
211-032

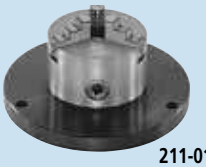
211-014


211-031

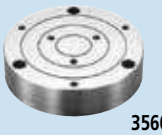
356038

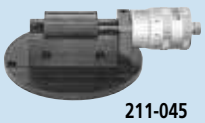
211-045


350850

Sliding detector-unit holder (Standard) 12AAL090

The detector-unit holder is equipped with a sliding mechanism, enabling one-touch measurement of a workpiece with a deep hole having a thick wall, which has been difficult with the conventional standard arm.



Sliding distance: 4.4"(112mm)

The detector-unit holder can be stopped at a position sufficiently higher than the workpiece along the Z-axis, and then lowered and positioned to make measurements. Furthermore, internal/external diameters can be easily measured with the continuous internal/external diameter measurement function*.

*: See page 41 for details about the continuous ID and OD measuring function.

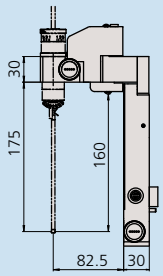

12AAF203

Unit: mm

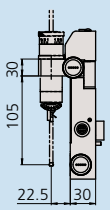

12AAF204

Roundtest RA-H5200AS / AH

SERIES 211 — Roundness / Cylindricity Measuring System

Technical Data

Turntable
Rotational accuracy (radial): {(0.02+3.5H/10000)µm}
Rotational accuracy (axial): {(0.02+3.5X/10000)µm}
H: Probing height (mm), X: Distance from the turntable axis (mm)
- Rotating speed: 2, 4, 6, 10rpm (20rpm: auto-centering)
- Table top diameter: ø 11.8" (300mm)
- Centering range: ±5mm
- Leveling range: ±1°
- Maximum probing diameter: ø 15.7" (400mm)
- Maximum workpiece diameter: ø 26.8" (680mm)
- Maximum workpiece weight: 176 lbs (80kg)
  143 lbs (65kg): auto-centering

Vertical column (Z-axis)
- Vertical travel: 13.8" (350mm), (21.7" (550mm): AH model)
- Straightness (λc2.5): 0.05µm / 100mm, 0.14µm / 350mm
  (0.2µm / 550mm: AH model)
- Parallelism with rotating axis: 0.2µm / 350mm
  (0.32µm / 550mm: AH model)
- Positioning speed: Max. 60mm/s
- Measuring speed: 0.5, 1, 2, 5mm/s
- Maximum probing height: 13.8" (350mm) (OD / ID)
  [21.7" (550mm) (OD / ID): AH model)
- Maximum probing depth: over ø32: 85mm (w/standard stylus)
  over ø7: 50mm (w/standard stylus)

Horizontal arm (X-axis)
- Horizontal travel: 8.9" (225mm)
- Straightness (λc2.5): 0.4µm / 200mm
- Squareness with rotating axis: 0.5µm / 200mm
- Positioning speed: Max. 50mm/s
- Measuring speed: 0.5, 1, 2, 5mm/s

Probe and stylus
- Measuring range: ±400µm (±5mm: tracking range)
- Measuring force: 10mN~50mN (in 5 steps)
- Standard stylus: **12AAL021**, carbide ball, ø1.6mm
- Measuring direction: Two directional
- Stylus angle adjustment: ±45° (with graduations)

Data analysis system
- Analysis software: Roundpak
- Filter type:
  2CRPC-75%, 2CRPC-50%, 2CR-75% (non-phase corrected), 2CR-50% (non-phase corrected), Gaussian, filter OFF
- Cutoff value;
  15upr, 50upr, 150upr, 500upr, 1500upr, 15-150upr, 15-500upr, 15-1500upr, 50-500upr, 50-1500upr, 150-1500upr, Manual setting
- Reference circles for roundness evaluation:
  LSC, MZC, MIC, MCC

Air supply
- Air pressure: 390kPa (4kgf/cm^2)
- Air consumption: 45L/min.

Power supply: 100V AC – 240V AC, 50/60Hz
Dimensions (W x D x H): 49.6 x 28.0 x 66.9"
(1260 x 710 x 1700mm)
49.6 x 28.0 x 74.8"
(1260 x 710 x 1900mm: AH model)
Mass: Main unit: 1433lbs. (650kg)
1477lbs. (670kg): AH model
Vibration isolator: 375 lbs (170kg)

RA-H5200AS / AH, a roundness/cylindricity measuring system developed to combine world-class accuracy with maneuverability/ high-analysis capability.

Enhanced detector safety functions, such as accidental touch and collision detection, is installed to minimize damage to both machine and workpieces.



RA-H5200AS with personal computer system and software

* Shown with optional side table for PC.

High-accuracy automatic centering/leveling turntable

A highly accurate, highly rigid turntable has been achieved through exceptional manufacturing accuracy of the critical components, such as the rotor and stator, in addition to an air-bearing incorporating a complex aperture that provides superior rigidity and uniform pressure distribution. As a result, the rotational accuracy (radial), which is the heart of the roundness/ cylindricity measuring system, is a world-class (0.02 +3.5H/10000)µm.



Automatic continuous OD/ID measurement

Automatic measurement can be performed continuously from external diameter to internal diameter without having to change the probe position. This not only reduces measurement time, but eliminates the error factors otherwise involved in changing the probe position, greatly facilitating high-accuracy measurement.

The automatic centering/leveling mechanism incorporates a high-precision glass scale on each axis of the turntable. This allows feedback to be generated that prevents positioning errors from affecting centering/leveling adjustments. The high-speed, automatic, centering/leveling capability achieved greatly contributes to reducing the total measurement time from workpiece setting to workpiece measurement.

Continuous measurement is possible as shown in steps (1) through (3) on the figure at the left, without having to switch the probe direction.

1) and 2) : OD measurement
3) : ID measurement
→ : Movement

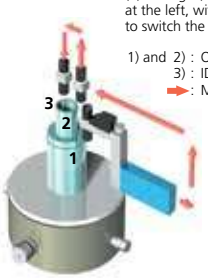

Mitutoyo

Roundtest RA-H5200AS / AH

SERIES 211 — Roundness / Cylindricity Measuring System

X-axis tracking measurement
Because of the linear scale incorporated into the X-axis, measurement can be performed by tracking the workpiece surface (tracking range: ±5mm). This function is effective for measuring a workpiece with a displacement that exceeds the detection range of the probe in measuring roundness/cylindricity or a taper that is determined with slider/column movement.

Surface roughness measurement function (Surface roughness unit: option)
A surface roughness detector, compliant with the relevant international standards, can be mounted in place of the roundness measuring detector. This creates a multiple sensor system that can not only test the geometrical roundness/cylindricity of a surface, but also the roughness of that surface.



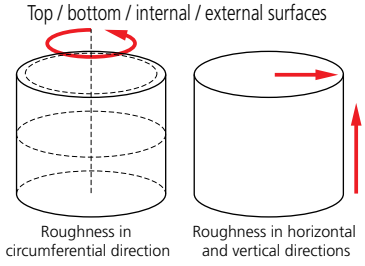



SPECIFICATIONS

Model No.	RA-H5200AS	RA-H5200AH
Order No. * with vibration isolating stand	**211-531A**	**211-532A**
Column travel	13.77" (350mm) (standard column)	21.65" (550mm) (high column)

DIMENSIONS

Unit: mm

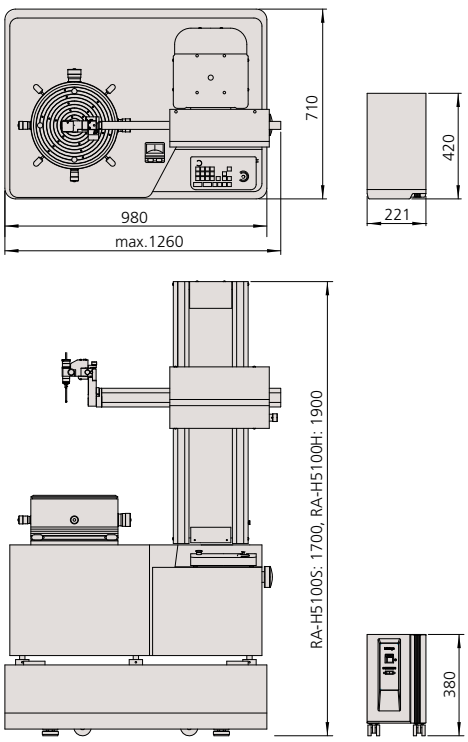

Optional Accessories

350850: Cylindrical square
12AAF203: Extension probe holder (2X higher)
12AAF205: Extension probe holder (3X higher)
12AAF204: Auxiliary probe holder for a large diameter workpiece
211-045: Magnification calibration gage
211-014: Chuck (OD: 2 - 78mm, ID: 25 - 68mm)
211-032: Quick chuck (OD: 1 - 79mm, ID: 16 - 69mm)
211-031: Micro-chuck (OD: 0.1~1.5mm max.)
12AAB598: Protective shield
———: Interchangeable styli (See page J-49.)
12AAL019: Side table for PC



Sliding detector-unit holder (Standard) 12AAL090
The detector-unit holder is equipped with a sliding mechanism, enabling one-touch measurement of a workpiece with a deep hole having a thick wall, which has been difficult with the conventional standard arm.



Sliding distance: 4.4" (112mm)

The detector-unit holder can be stopped at a position sufficiently higher than the workpiece along the Z-axis, and then lowered and positioned to make measurements. Furthermore, internal/external diameters can be easily measured with the continuous internal/external diameter measurement function*.

*: See page 41 for details about the continuous ID and OD measuring function.

Unit: mm

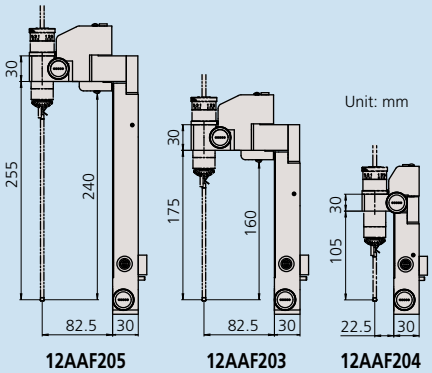

Roundtest Extreme RA-2200CNC / RA-H5200CNC

SERIES 211 — CNC Roundness, Cylindricity and Surface Roughness Measuring System

Mitutoyo offers innovative roundness/ cylindricity measuring systems capable of automated measurement with independent/ simultaneous multi-axis CNC control. In addition to high measuring accuracy and reliability, these CNC models provide excellent inspection productivity. Roundness and surface roughness measurements are both available from a single measuring system so workpiece resetting for roughness measurement is not required. Roughness measurement is possible in the axial and circumferential directions.



Holder-arm orientation switching (vertical position - horizontal position)



Detector rotation mechanism (0 to 290°, in increments of 1°)



RA-2200H CNC
with personal computer system and software

* Shown with optional vibration isolator and side table for PC.



RA-H5200H CNC
with personal computer system and software

* Shown with optional side table for PC.

Technical Data: RA-2200CNC

Turntable
- Rotational accuracy (radial): {(0.02+3.5H/10000)µm}
- Rotational accuracy (axial): {(0.02+3.5X/10000)µm}
  H: Probing height (mm), X: Distance from the turntable axis (mm)
- Rotating speed: 2, 4, 6, 10rpm
- Tabletop diameter: ø 9.25" (235mm)
- Centering range: ±3mm
- Leveling range: ±1°
- Maximum probing diameter: ø 10.1" (256mm)
- Maximum workpiece diameter: ø 22.8" (580mm)
- Maximum workpiece weight: 66 lbs (30kg)

Vertical column (Z-axis)
- Vertical travel: 11.8" (300mm) 19.7" (500mm: 2200H model)
- Straightness (c2.5): 0.10µm / 100mm, 0.15µm / 300mm (0.25µm / 500mm: 2200H model)
- Parallelism with rotating axis: 0.7µm / 300mm (1.2µm / 500mm: 2200H model)
- Positioning speed: Max. 50mm/s
- Measuring speed: 0.5, 1, 2, 5mm/s
- Maximum probing height: 11.8" (300mm) (OD / ID) [19.7" (500mm) (OD / ID): 2200H model]
- Maximum probing depth: over ø32: 104mm (w/standard stylus) over ø12.7: 26mm (w/standard stylus)

Horizontal arm (X-axis)
- Horizontal travel: 6.9" (175mm) (Including a protrusion of 1" (25mm) the turntable rotation center)
- Straightness (c2.5): 0.7µm / 150mm
- Squareness with rotating axis: 1.0µm / 150mm
- Positioning speed: Max. 30mm/s
- Measuring speed: 0.5, 1, 2, 5mm/s

Probe and stylus
- Measuring range: ±400µm/±40µm/±4µm (±5mm: tracking range)
- Measuring force: 40mN (not adjustable)
- Standard stylus: **12AAE301**, carbide ball, ø1.6mm
- Measuring direction: one direction
- Stylus angle adjustment: ±45° (with graduations)

Air supply
- Air pressure: 390kPa (4kgf/cm^2)
- Air consumption: 30L/min.

Power supply: 100V AC – 240V AC, 50/60Hz

Dimensions (W x D x H): 26.3 x 20 x 35.4" (667 x 510 x 900mm) (26.3 x 20 x 43.3" (667 x 510 x 1100mm): 2200H model)

Mass: 397 lbs (180kg) (441 lbs (200kg): 2200H model)

Technical Data: RA-H5200CNC

Turntable
- Rotational accuracy (radial): (.8+.35H)µin {(0.02+3.5H/10000)µm}
- Rotational accuracy (axial): (.8+.35X)µin {(0.02+3.5X/10000)µm}
  H: Probing height (mm), X: Distance from the turntable axis (mm)
- Rotating speed: 2, 4, 6, 10rpm (20rpm: auto-centering)
- Table top diameter: ø300mm
- Centering range: ±5mm
- Leveling range: ±1°
- Maximum probing diameter: ø14" (356mm)
- Maximum workpiece diameter: ø 26.8" (680mm)
- Maximum workpiece weight: 176 lbs (80kg) 143 lbs (65kg): auto-centering

Vertical column (Z-axis)
- Vertical travel: 13.7" (350mm) 21.7" (550mm): H5200H model
- Straightness (λc2.5): 0.05µm / 100mm, 0.14µm / 350mm (0.2µm / 550mm: H5200H model)
- Parallelism with rotating axis: 0.2µm / 350mm (0.32µm / 550mm: H5200H model)
- Positioning speed: Max. 60mm/s
- Measuring speed: 0.5, 1, 2, 5mm/s
- Maximum probing height: 13.7" (350mm) (OD / ID) [21.7" (550mm) (OD / ID): H5200H model)
- Maximum probing depth: over ø32: 104mm (w/standard stylus) over ø12.7: 26mm (w/standard stylus)

Horizontal arm (X-axis)
- Horizontal travel: 8.8" (225mm)
- Straightness (λc2.5): 0.4µm / 200mm
- Squareness with rotating axis: 0.5µm / 200mm
- Positioning speed: Max. 50mm/s
- Measuring speed: 0.5, 1, 2, 5mm/s

Probe and stylus
- Measuring range: ±400µm (±5mm: tracking range)
- Measuring force: 40mN (not adjustable)
- Standard stylus: **12AAE301**, carbide ball, ø1.6mm
- Measuring direction: one direction
- Stylus angle adjustment: ±45° (with graduations)

Air supply
- Air pressure: 390kPa (4kgf/cm^2)
- Air consumption: 45L/min.

Power supply: 100V AC – 240V AC, 50/60Hz

Dimensions (W x D x H): 49.6 x 28.0 x 66.9" (1260 x 710 x 1700mm) 49.6 x 28.0 x 74.8" (1260 x 710 x 1900mm: H5200H model)

Mass: Main unit: 1433 lbs (650kg) 1477 lbs (670kg): H5200H (model)

Vibration isolator: 375 lbs (170kg)

Mitutoyo

Roundtest Extreme
RA-2200CNC / RA-H5200CNC

SERIES 211 — CNC Roundness, Cylindricity and Surface Roughness Measuring System

ROUNDPAK

Off-line measurement procedure programming function

On-screen virtual 3D simulation measurements can be performed with the incorporated off-line teaching function that allows a part program (measurement procedure) to be created without an objective workpiece. The probe and the holder unit of the Roundtest Extreme can be precisely represented and an alarm can be raised to indicate that there is a collision risk predicted by the simulation.

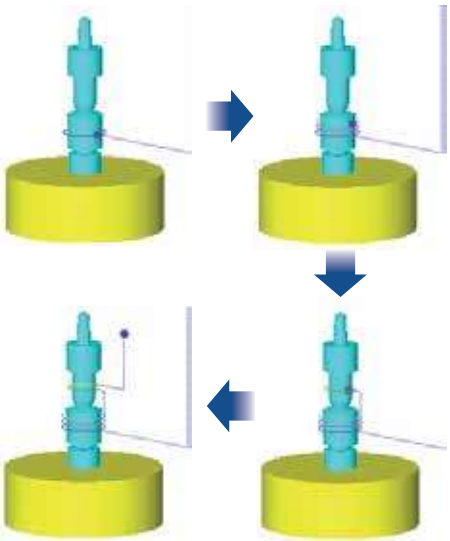



3D simulation screens (work-view windows) can be generated after entering CAD data (in IGES, DXF form) and text data.

MiCAT
Mitutoyo Intelligent Computer Aided Technology
the standard in world metrology software
FORM

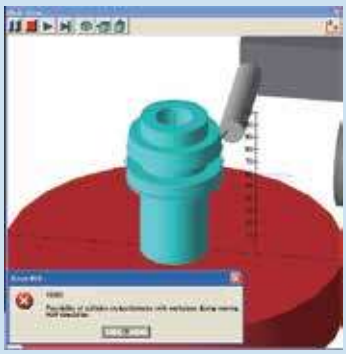

Optional Accessories

350850: Cylindrical square
211-045: Magnification calibration gage
211-014: Chuck (OD: 1 - 78mm, ID: 25 - 68mm)
211-032: Quick chuck (OD: 1 - 79mm, ID: 16 - 69mm)
211-031: Micro-chuck (OD: 0.1~1.5mm max.)
12AAB598: Protective shield (RA-H5200 only)
———: Interchangeable styli (See page J-49.)
12AAK110: Vibration isolator (RA-2200 only)
12AAK120: Monitor arm (RA-2200 only)
12AAL019: Side table for PC
12AAG419: Surface roughness detector for RA-CNC

SPECIFICATIONS

Model No.	EXTREME RA-2200S CNC	EXTREME RA-2200H CNC
Order No.	**211-517A**	**211-518A**
Column travel	11.8″ (300mm) (standard column)	19.7″ (500mm) (high column)

Model No.	EXTREME RA-H5200S CNC	EXTREME RA-H5200H CNC
Order No. with vibration isolating stand	**211-533A**	**211-534A**
Column travel	13.77″ (350mm) (standard column)	21.65″ (550mm) (high column)

DIMENSIONS

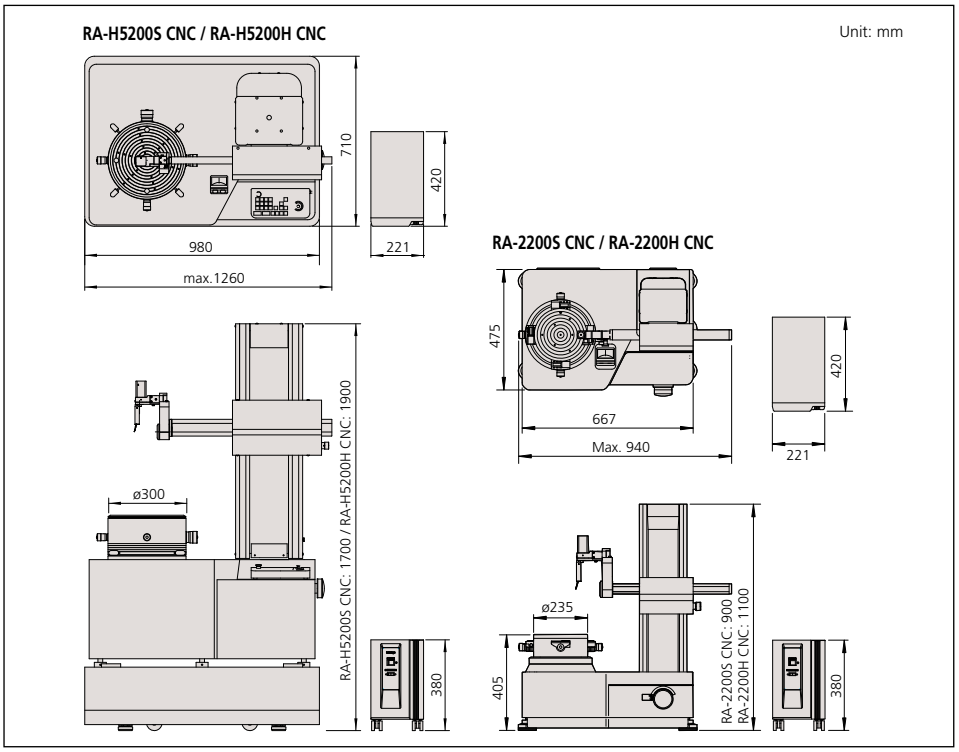



64AAB524 Workstation

Dimensions

Overall: 36 x 30 x 24-32″ (W x D x H)
Cord Bin: 4″h x 5-3/8″d (width is 10″ less than table width)
Distance From Front Edge to Cord Bin: 30″d table – 15-1/2″d
Distance Between Legs: 10″ less than the overall table width

Work surface feature a 1″, 45 lb density, furniture board substrate with attractive Gray laminate tabletop brimmed with bullnose edge band in Quartz gray color. Work surface is height adjustable in one inch increments from 24″ to 32″.

Tabletop incorporates metal threaded inserts on the underside to affix the leg assemblies for added strength and durability. Table comes with 4″ casters with two as locking type for stationary placement.

*Laptop PC not included with table.

Optional Styli for Roundtest

Interchangeable Styli for RA-120, RA-120P, RA-1600/M, RA-2200, RA-H5200

Application/Type	Standard (Standard accessory)	Notch	Deep groove	Corner	Cutter mark
Order No.	**12AAL021***	**12AAL022**	**12AAL023**	**12AAL024**	**12AAL025**
Stylus tip	ø1.6 mm tungsten carbide	ø3 mm tungsten carbide	SR0.25mm sapphire	SR0.25mm sapphire	tungsten carbide
Dimensions (mm)	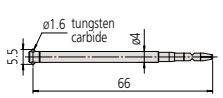	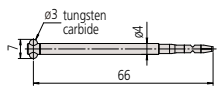 Included in 5-pcs. styli set No. 12AAL020	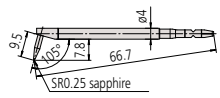 Included in 5-pcs. styli set No. 12AAL020	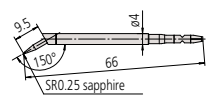	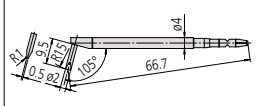

Application/Type	Small hole (ø0.8)	Small hole (ø1.0)	Small hole (ø1.6)	Extra small hole (Depth 3mm)	ø1.6 mm ball
Order No.	**12AAL026**	**12AAL027**	**12AAL028**	**12AAL029**	**12AAL030**
Stylus tip	ø0.8 mm tungsten carbide	ø1 mm tungsten carbide	ø1.6 mm tungsten carbide	ø0.5 mm tungsten carbide	ø1.6 mm tungsten carbide
Dimensions (mm)	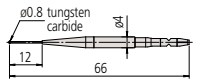	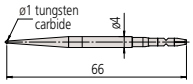 Included in 5-pcs. styli set No. 12AAL020	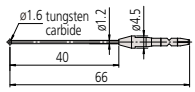	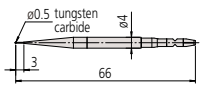	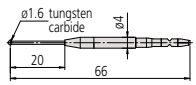 Included in 5-pcs. styli set No. 12AAL020

Application/Type	Disk	Crank (ø0.5)	Crank (ø1.0)	Flat surface	2X-long type**
Order No.	**12AAL031**	**12AAL032**	**12AAL033**	**12AAL034**	**12AAL035**
Stylus tip	ø12 mm tungsten carbide	ø0.5 mm tungsten carbide (Depth 2.5 mm)	ø1 mm tungsten carbide (Depth 5.5 mm)	tungsten carbide	ø1.6 mm tungsten carbide
Dimensions (mm)	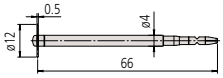	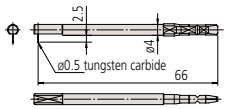	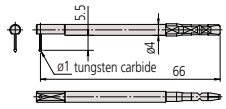	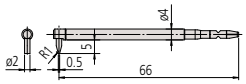	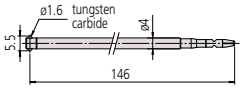 Included in 5-pcs. styli set No. 12AAL020

Application/Type	2X-long type notch**	2X-long type deep groove**	2X-long type corner**	2X-long type cutter mark**	2X-long type Small hole**
Order No.	**12AAL036**	**12AAL037**	**12AAL038**	**12AAL039**	**12AAL040**
Stylus tip	ø3 mm tungsten carbide	SR0.25 mm sapphire	SR0.25 mm sapphire	tungsten carbide	ø1 mm tungsten carbide
Dimensions (mm)	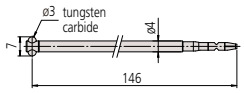	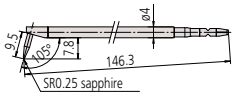	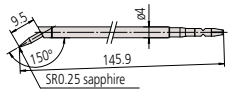	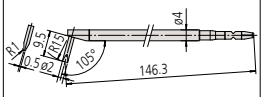	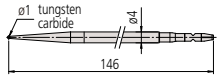

Application/Type	3X-long type**	3X-long type deep groove**	Stylus shank	Stylus shank (standard groove)	Stylus shank (2X-long groove)**
Order No.	**12AAL041**	**12AAL042**	**12AAL043**	**12AAL044**	**12AAL045**
Stylus tip	ø1.6 mm tungsten carbide	SR0.25 mm sapphire	For mounting CMM stylus (mounting thread M2)	For mounting CMM stylus (mounting thread M2)	For mounting CMM stylus (mounting thread M2)
Dimensions (mm)	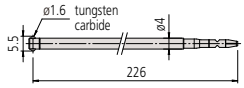	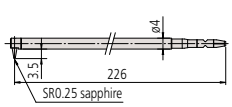	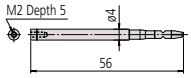	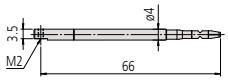	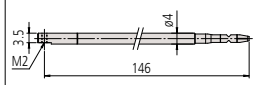

* **12AAL021** is a standard accessory for all Roundtest models.
** Not available for RA-10, RA-120/P and RA-220
Measuring is only in the vertical direction. Measuring magnification of 20000X is available using the 2X-long stylus.
Customized special interchangeable styli are available on request. Please contact any Mitutoyo office for more information.
† New design for holding styli is not shown in above illustrations.
New styli for RA-2200 / H5200 are compatible with old RA-2100 / H5100 detectors.
Old styli for RA-2100 / H5100 are NOT compatible with new RA-2200 / H5200 detectors.

5 pc. Stylus set: 12AAL020

Part No.	Part Description
12AAL022	Stylus for notched workpiece
12AAL023	Stylus for deep groove
12AAL027	Stylus for small hole (1.0mm)
12AAL030	1.6mm ball stylus
12AAL035	2X-long type stylus

M2 CMM stylus with ruby ball tip

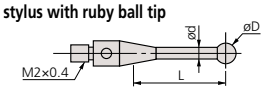

Unit: mm



K651276
D = ø0.5, d = ø0.34, L = 3.0, Mass = 0.3g



K651236
D = ø0.7, d = ø0.5, L = 4.0 , Mass = 0.3g



K651012
D = ø1.0, d = ø0.7, L = 4.5, Mass = 0.3g



K651013
D = ø1.5, d = ø0.7, L = 4.5, Mass = 0.3g



K651014
D = ø2.0, d = ø1.0, L = 6.0, Mass = 0.3g



K651016
D = ø3.0, d = ø1.5, L = 7.5, Mass = 0.4g



K651017
D = ø4.0, d = ø1.5, L = 10.0, Mass = 0.4g



K651018
D = ø5.0, d = ø2.5, R = 10.0, Mass = 0.7g



K651024
D = ø6.0, d = ø2.5, R = 10.0, Mass = 0.9g



K651025
D = ø8.0, d = ø2.5, R = 11.0, Mass = 1.5g

Optional Styli for Roundtest

Interchangeable Styli for RA-2200 CNC, RA-H5200 CNC

Application/Type	Groove	Flat surface	General purpose	Notch
Order No.	**12AAE310**	**12AAE302**	**12AAE301**	**12AAE309**
Stylus tip	ø1.6 mm tungsten carbide	ø1.6 mm tungsten carbide	ø1.6 mm tungsten carbide	ø3 mm tungsten carbide
Dimensions (mm)	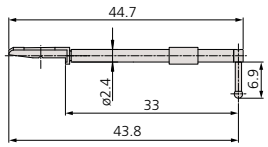	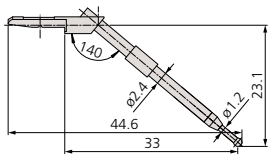	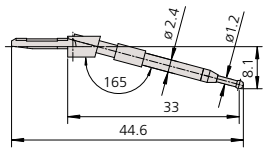	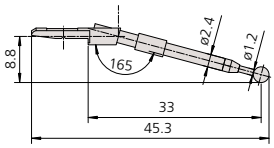

Application/Type	ø1.6 mm ball	ø0.8 mm ball	ø0.5 mm ball	Deep groove
Order No.	**12AAE303**	**12AAE304**	**12AAE305**	**12AAE308**
Stylus tip	ø1.6 mm tungsten carbide	ø0.8 mm tungsten carbide	ø0.5 mm tungsten carbide	ø1.6 mm tungsten carbide
Dimensions (mm)	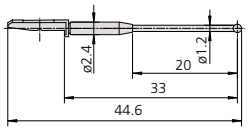	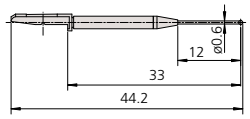	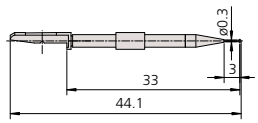	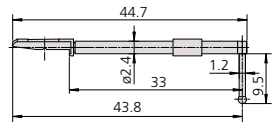

Application/Type	Deep hole A	Deep hole B
Order No.	**12AAE306**	**12AAE307**
Stylus tip	ø1.6 mm tungsten carbide	ø1.6 mm tungsten carbide
Dimensions (mm)	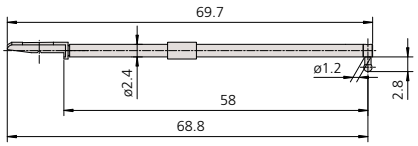	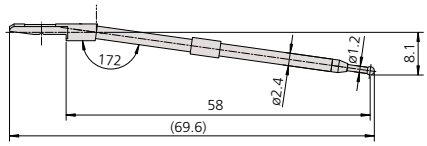

Analysis options		RA-H5200CNC/ RA-H5200	RA-2200CNC/ RA-2200	RA-1600	RA-1600M	RA-120P	RA-120
Roundness	○	●	●	●	●	●	●
Cylindricity	⌭	●	●	●	●	—	—
Concentricity	◎	●	●	●	●	●	●
Coaxiality	axis-element	◉	●	●	●	●	●	●
	Axis-axis		●	●	●	●	●	—
Flatness	▱	●	●	●	▲	●	●
Parallelism	//	●	●	●	▲	●	●
Perpendicularity	⊥	●	●	●	●	●	●
Runout	↗	●	●	●	●	●	●
Total runout	⌰	●	●	●	▲	—	—
Straightness	—	●	●	●	▲	—	—
Inclination	∠	●	●	●	▲	—	—
Taper	/\	●	●	●	▲	—	—

● Full measurment capability
▲ Limited measurement capability; R-Axis must be stationary.

Usage examples of styli


Cutter mark


Corner


Small hole


Small hole


Flatness measurement


Notched workpiece measurement


ID measurement

Optional Accessories for Roundtest



Centering chuck (ring operated)
211-032
Suitable for holding small parts with easy-to-operate knurled-ring clamping.
- Holding capacity:
  Internal jaws: OD = 1-36 mm, ID = 14-70 mm.
External jaws: OD = 1-75 mm.
- External dimensions: ø118x41 mm
- Mass: 1.2kg



Centering chuck (key operated)
211-014
Suitable for holding longer parts and those requiring a relatively powerful clamp.
- Holding capacity:
  Internal jaws: OD = 1 - 35mm, ID = 33 - 85mm
  External jaws: OD = 30-80mm.
- External dimensions: ø157 x 76mm
- Mass: 3.8kg

Vibration Isolated frame with work surface



Code No.	Dimensions	Load Capacity
64AAB357	30 x 48 x 30"	1300 lbs



Cylindrical square
350850
- Used for checking and aligning table rotation axis parallel to the Z-axis column.
- Squareness: 3µm
- Straightness: 1µm
- Cylindricity: 2µm
- Roundness: 0.5µm
- Mass: 7.5kg



Micro-chuck
211-031
Used for clamping a workpiece (less than ø1 mm dia.) that the centering chuck cannot handle.
- Holding capacity: up to ø1.5 mm
- External dimensions: ø118x48.5 mm
- Mass: 0.8kg

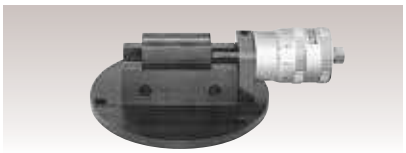

Magnification calibration gage
211-045
Used for normalizing detector magnification by calibrating detector travel against displacement of a micrometer spindle.
- Maximum calibration range: 400µm
- Graduation: 0.2µm
- Mass: 4kg



Auxiliary workpiece stand
356038
- Used for measuring a workpiece whose diameter is 20mm or shorter and whose height is 20mm or lower.



Magnification checking kit*
997090
- A combination of gage blocks and an optical flat.

* Standard accessory for RA-2200, RA-2200CNC, RA-H5200 and RA-H5200CNC



Origin-point gage*
998382
- A gage for zero setting of the R-axis and Z-axis.

* Standard accessory for RA-2200 and RA-H5200



211-016
Reference Hemisphere

Mitutoyo

Eco-Fix Kit Form-S

Mitutoyo ECO-FIX Kit Fixture Systems



Part No.	Qty.	Part name	Part No.	Qty.	Part name
K551038	1	Adaptor plate ø 150mm	**K551069**	1	Flat top ø 12mm
K551024	1	Location pin ø 12 X 13mm	**K550262**	1	V-block mini
K551025	1	Location pin ø 12 X 25mm	**K550261**	2	Cone receiver mini
K551026	1	Location pin ø 12 X 50mm	**K550250**	1	Stopper element mini
K551027	1	Location pin ø 12 X 100mm	**K550247**	1	Back square mini
K551028	1	Location pin ø 20 X 13mm	**K550888**	2	Straight pin Ø 6mm x 20mm
K551029	1	Location pin ø 20 X 25mm	**K550889**	2	Straight pin Ø 6mm x 30mm
K551030	1	Location pin ø 20 X 50mm	**K550890**	2	Straight pin Ø 6mm x 40mm
K551031	1	Location pin ø 20 X 100mm	**K551046**	1	Slotted nut for receiver bracket h=12mm
K551035	1	Receiver bracket small	**K551050**	1	Allen key 2mm
K551036	1	Receiver bracket large	**K551051**	1	Allen key 3mm
K551040	1	Adjustable location pin ø 20mm	**K551052**	1	Allen key 4mm
K551041	1	Adjustable location pin ø 12mm	**K551053**	1	Allen key 5mm
K551042	3	Location pin ø 12mm with bore ø 6mm	**K551054**	1	Double open ended spanner 10-17
K551044	1	Receiver bracket L=90; ø 12mm	**K550591**	1	Washer ø 6,4mm / ø 17mm
K550716	1	Straight pin with thread	**K550110**	8	Cylinder head screw M6 x 20mm
K550279	1	Spring clip, d= 8mm, L= 60mm	**K550563**	6	Cylinder head screw M6 x 25mm
Kit Part No.			**K551133**		

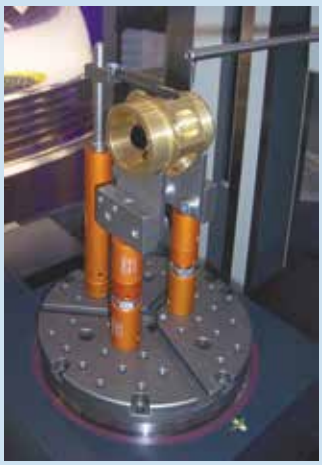

Eco-Fix Kit Form-L



Part No.	Qty.	Part name	Part No.	Qty.	Part name
K551039	1	Adaptor plate ø 200mm	**K550247**	1	Back square mini
K551024	1	Location pin ø 12 X 13mm	**K550058**	1	V-block
K551025	1	Location pin ø 12 X 25mm	**K550365**	2	Cone receiver
K551026	1	Location pin ø 12 X 50mm	**K550982**	1	Stopper element
K551027	2	Location pin ø 12 X 100mm	**K550248**	1	Back square
K551028	2	Location pin ø 20 X 13mm	**K550888**	2	Straight pin Ø 6mm x 20mm
K551029	2	Location pin ø 20 X 25mm	**K550889**	2	Straight pin Ø 6mm x 30mm
K551030	2	Location pin ø 20 X 50mm	**K550890**	2	Straight pin Ø 6mm x 40mm
K551031	1	Location pin ø 20 X 100mm	**K550000**	2	Straight pin Ø 8mm x 30mm
K551035	1	Receiver bracket small	**K550001**	2	Straight pin Ø 8mm x 50mm
K551036	1	Receiver bracket large	**K550002**	2	Straight pin Ø 8mm x 95mm
K551040	2	Adjustable location pin ø 20mm	**K551046**	1	Slotted Nut for receiver bracket h= 12mm
K551041	1	Adjustable location pin ø 12mm	**K551047**	1	Slotted Nut for receiver bracket h= 15mm
K551042	2	Location pin ø 12mm with bore ø 6mm	**K551050**	1	Allen key 2mm
K551043	3	Location pin ø 20mm with bore ø 8mm	**K551051**	1	Allen key 3mm
K551044	1	Receiver bracket L=90; ø 12mm	**K551052**	1	Allen key 4mm
K551045	1	Receiver bracket L=120; ø 20mm	**K551053**	1	Allen key 5mm
K550279	2	Spring clip, d= 8mm, L= 60mm	**K550591**	1	Washer ø 6,4mm / ø 17mm
K550262	1	V-block mini	**K550110**	12	Cylinder head screw M6 x 20mm
K550261	2	Cone receiver mini	**K550563**	6	Cylinder head screw M6 x 25mm
K550250	1	Stopper element mini			
Kit Part No.			**K551134**		



Quick Guide to Precision Measuring Instruments

Roundtest (Roundform Measuring Instruments)

- **JIS B 7451-1997: Roundness measuring instruments**
- **JIS B 0621-1984: Definition and notation of geometric deviations**
- **JIS B 0021-1998: Geometric property specifications touching of products – Geometric tolerance Roundness Testing**

Roundness

Any circumferential line must be contained within the tolerance zone formed between two coplanar circles with a difference in radii of t

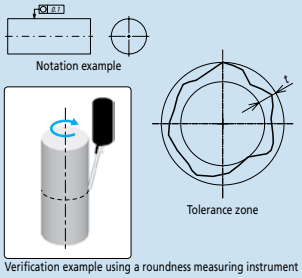

Verification example using a roundness measuring instrument

Straightness

Any line on the surface must lie within the tolerance zone formed between two parallel straight lines a distance t apart and in the direction specified

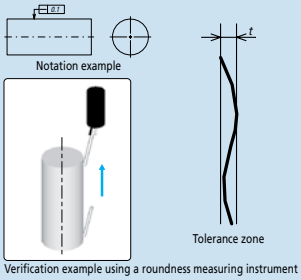

Verification example using a roundness measuring instrument

Flatness

The surface must be contained within the tolerance zone formed between two parallel planes a distance t apart

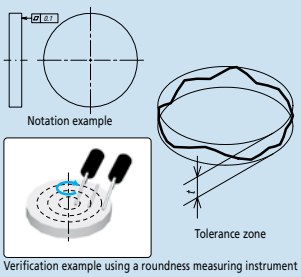

Verification example using a roundness measuring instrument

Cylindricity

The surface must be contained within the tolerance zone formed between two coaxial cylinders with a difference in radii of t

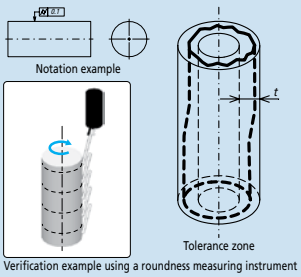

Verification example using a roundness measuring instrument

Concentricity

The center point must be contained within the tolerance zone formed by a circle of diameter t concentric with the datum

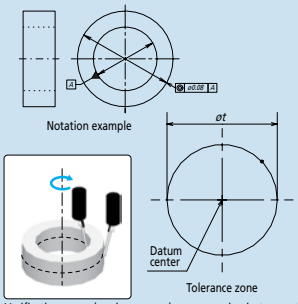

Verification example using a roundness measuring instrument

Coaxiality

The axis must be contained within the tolerance zone formed by a cylinder of diameter t concentric with the datum

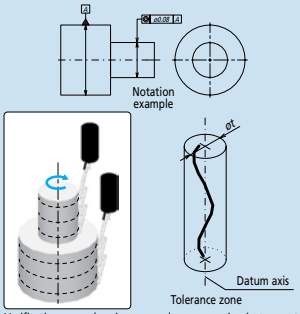

Verification example using a roundness measuring instrument

Perpendicularity

The line or surface must be contained within the tolerance zone formed between two planes a distance t apart and perpendicular to the datum

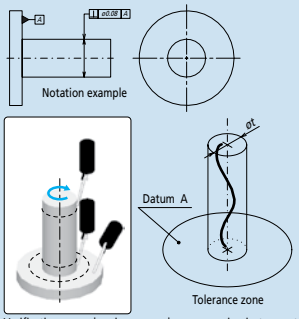

Verification example using a roundness measuring instrument

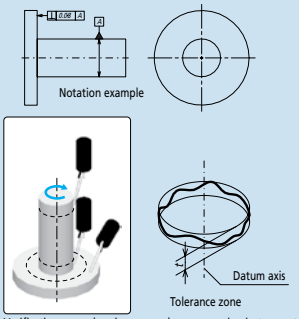

Verification example using a roundness measuring instrument

Circular Runout

The line must be contained within the tolerance zone formed between two coplanar and/or concentric circles a distance t apart concentric with or perpendicular to the datum

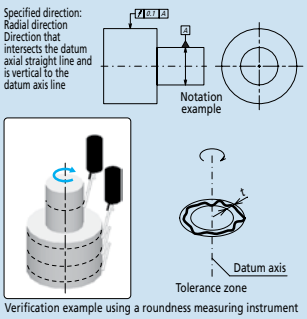

Verification example using a roundness measuring instrument

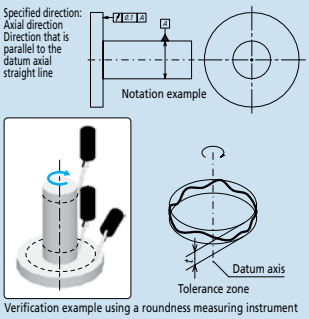

Verification example using a roundness measuring instrument

Total Runout

The surface must be contained within the tolerance zone formed between two coaxial cylinders with a difference in radii of t, or planes a distance t apart, concentric with or perpendicular to the datum

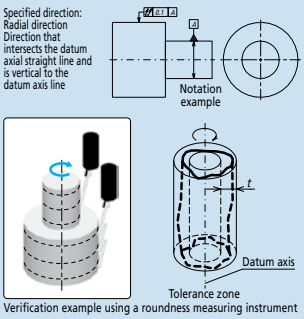

Verification example using a roundness measuring instrument

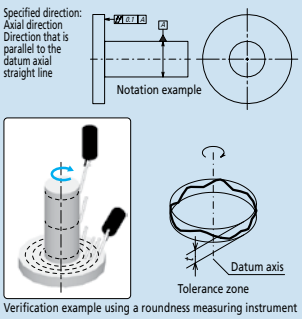

Verification example using a roundness measuring instrument

Adjustment prior to Measurement

Centering

A displacement offset (eccentricity) between the Roundtest's rotary table axis and that of the workpiece results in distortion of the measured form (limaçon error) and consequentially produces an error in the calculated roundness value. The larger the eccentricity, the larger is the error in calculated roundness. Therefore the workpiece should be centered (axes made coincident) before measurement.
Some roundness testers support accurate measurement with a limaçon error correction function.
The effectiveness of this function can be seen in the graph below.

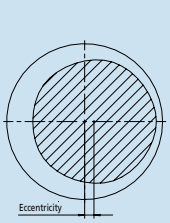

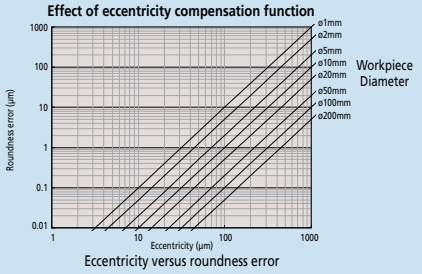

Eccentricity versus roundness error

Leveling

Any inclination of the axis of a workpiece with respect to the rotational axis of the measuring instrument will cause an elliptic error. Leveling must be performed so that these axes are sufficiently parallel.

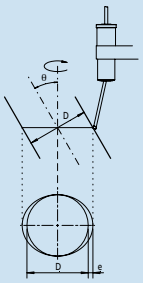

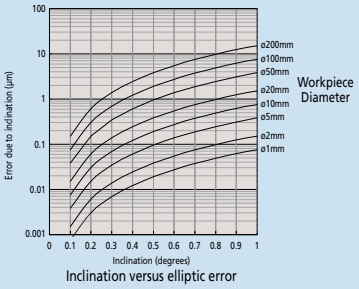

Inclination versus elliptic error

Effect of Filter Settings on the Measured Profile

Roundness values as measured are greatly affected by variation of filter cutoff value. It is necessary to set the filter appropriately for the evaluation required.



Evaluating the Measured Profile Roundness

Roundness testers use the measurement data to generate reference circles whose dimensions define the roundness value. There are four methods of generating these circles, as shown below, and each method has individual characteristics so the method that best matches the function of the workpiece should be chosen.

Least Square Circle (LSC) Method

A circle is fitted to the measured profile such that the sum of the squares of the departure of the profile data from this circle is a minimum. The roundness figure is then defined as the difference between the maximum departures of the profile from this circle (highest peak to the lowest valley).

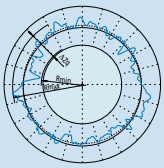

ΔZq = Rmax-Rmin

Minimum Zone Circles (MZC) Method

Two concentric circles are positioned to enclose the measured profile such that their radial difference is a minimum. The roundness figure is then defined as the radial separation of these two circles.

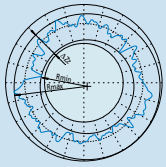

ΔZz = Rmax-Rmin

Minimum Circumscribed Circle (MCC) Method

The smallest circle that can enclose the measured profile is created. The roundness figure is then defined as the maximum departure of the profile from this circle. This circle is sometimes referred to as the 'ring gage' circle.

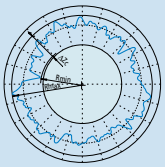

ΔZc = Rmax-Rmin

Maximum inscribed Circle (MIC) Method

The largest circle that can be enclosed by the profile data is created. The roundness figure is then defined as the maximum departure of the profile from this circle. This circle is sometimes referred to as the `plug gage' circle.

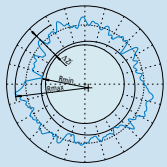

ΔZi = Rmax-Rmin

Undulations Per Revolution (UPR) data in the roundness graphs

Measurement result graphs

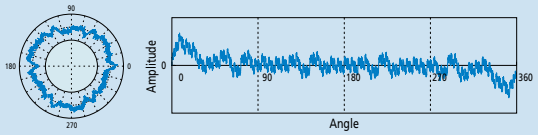

A 1 UPR condition indicates eccentricity of the workpiece relative to the rotational axis of the measuring instrument. The amplitude of undulation components depends on the leveling adjustment.

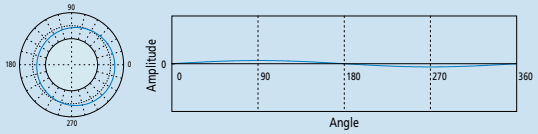

A 2 UPR condition may indicate: (1) insufficient leveling adjustment on the measuring instrument; (2) circular runout due to incorrect mounting of the workpiece on the machine tool that created its shape; (3) the form of the workpiece is elliptical by design as in, for example, an IC-engine piston.

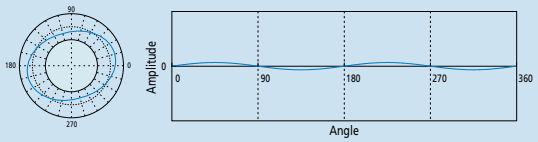

A 3 to 5 UPR condition may indicate: (1) Deformation due to over-tightening of the holding chuck on the measuring instrument; (2) Relaxation deformation due to stress release after unloading from the holding chuck on the machine tool that created its shape.

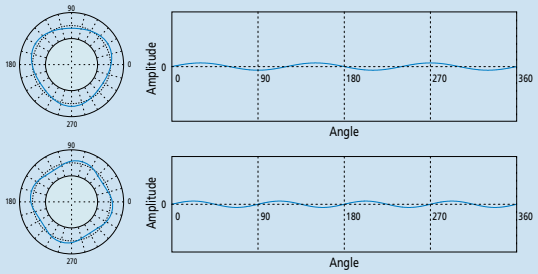

A 5 to 15 UPR condition often indicates unbalance factors in the machining method or processes used to produce the workpiece.

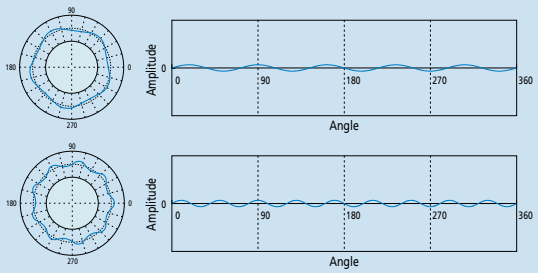

A 15 (or more) UPR condition is usually caused by tool chatter, machine vibration, coolant delivery effects, material non-homogeneity, etc., and is generally more important to the function than to the fit of a workpiece.

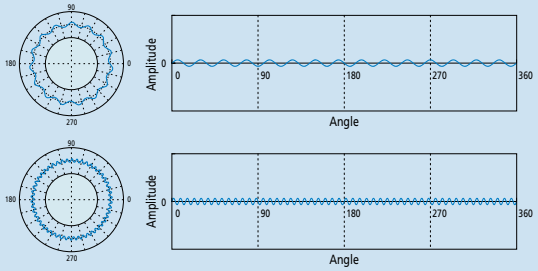





Micro Hardness Testing Machines



Rockwell Hardness Testing Machines



Micro Zone Test System



Portable Hardness Testing Instruments

INDEX

Test Equipment	
Micro Hardness Testing Machines	
Lineup of Hardness Testing Machines	K-2
HM-210 / 220 Type A	K-3
HM-200 Series with AVPAK Software	K-4
MZT-500	K-5
HV-110 / 120	K-6, 7
Optional Accessories Micro-Vickers/Vickers Hardness Testing Machine	K-8
Rockwell Hardness Testing Machines	
HR-521(L) / 523(L)	K-9
HR-320MS/430MR/430MS	K-10
Optional Accessories For Rockwell/Rockwell Superficial Hardness Testing Machine	K-11,12
Portable Hardness Testing Machines	
Hardmatic HH-411	K-13
Hardmatic HH-300	K-14
Hardmatic HH-300 Test Block Set	K-15
Quick Guide to Precision Measuring Instruments - Hardness Testing Machines	K-16,17



Hardmatic HH-411



HV110 Type B



HM-210D/220D



HH-300 Durometers

Mitutoyo

Lineup of Hardness Testing Machines

Hardness testing machines provide the simplest and most economical testing methods among many material testing machines, playing an important role in research activities, production activities, and commercial transactions. Mitutoyo offers a choice of standard hardness testing machines that are optimal for hard materials such as metals to soft materials such as plastic and rubber, as well as custom-designed testers such as in line-type automatic machines and labor-saving machines required on the shop floor.









Technical Data

Test force range:
HM-210A: 9 steps + arbitrary test force
HM-220A: 19 steps + arbitrary test force
Load dwell time: 0 - 999s
Manual XY stage unit
Stage size: 100x100mm
Travel range: 25x25mm
with Digimatic in/mm micrometer heads
Resolution: 0.001mm
Max. specimen height: 133mm (Stage size: 25 x 25mm)
Max. specimen height: 121mm (Stage size: 50 x 50mm)
Max. specimen depth: 160mm (from the center of indenter)
Optical path: 4-port objectives switching system of Infinity-correction optical system
Resolution: 0.01µm (When using objectives of X40 or more)
Data output: Serial interface (RS-232), Digimatic interface, USB 2.0
Power supply: 39VA 100-125/220-240V AC, 50/60Hz
Dimensions: (W x D x H): 315x671x595mm
Mass: 43kg

Optional Accessories (Factory-installed option)

11AAC104: Objective lens unit 2X
11AAC105: Objective lens unit 5X
11AAC106: Objective lens unit 10X
11AAC107: Objective lens unit 20X
11AAC108: Objective lens unit 100X
11AAC129: Measuring microscope (Digital ocular)
11AAC109: Knoop Indenter Assembly (HM-210 Series)
11AAC110: Knoop Indenter Assembly (HM-220 Series)

Optional Accessories

810-454A: TV camera unit (8.4 inch LCD)
19BAA058: Diamond indenter for Vickers (HM210 Series standard test force)
19BAA059: Diamond indenter for Vickers (HM220 Series low test force)
19BAA061: Diamond indenter for Knoop (HM210 Series)
19BAA062: Diamond indenter for Knoop (HM220 Series)
810-017: Vise
810-013: Specimen (thin plate) holder
810-014-1: Specimen (wire) holder
810-015-1: Specimen (wire or ball) holder
810-016: 50 mm Vise
810-017: 100 mm Vise
810-019: Specimen tilting holder
810-020: Universal specimen holder
810-018: Rotary table
810-084: Rotatable universal specimen holder
810-085: Adjustable specimen (thin plate) holder
810-095: Rotatable specimen stage
375-056: Stage Micrometer (glass) Micro-scale
810-650-1: Resin mold specimen stage ø25.4
810-650-2: Resin mold specimen stage ø30
810-650-3: Resin mold specimen stage ø31.75
810-650-4: Resin mold specimen stage ø38.1
810-650-5: Resin mold specimen stage ø40
810-641: Vibration Isolator
810-870A: Sample Heating Device HST-250
810-420: 25x25mm stage (metric only)
810-423: 50x50mm stage (metric only)
810-424: 1"x1" in/mm stage (standard)
810-427: 2"x2" in/mm stage



Power turret with up to 2 indenter mounts and 4 objective mounts (manual operation possible)

Touch-screen type control panel

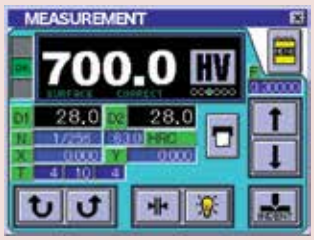

HM-210 / 220 Type A

SERIES 810 — Micro Vickers Hardness Testing Machines

FEATURES

- The electromagnetic force motor used in the loading mechanism enables the test force to be freely selected (see test force specifications) over the wide range of 0.4903mN to 19610mN (0.05gf to 2 kgf). It is also possible to freely set load dwell times. Now your desire for absolute control over the indentation size in Vickers hardness testing can be satisfied. The HM-200 series always offers the test force most appropriate for the specimen material and shape.
- The long working distance objectives used enable a comfortable working distance between the objective and the specimen surface. This greatly reduces the possibility of collision between the specimen and the objective during focusing operations. (e.g. for 50X objectives: 1.1mm for conventional models, 2.5mm for HM-200 series)
- Newly-designed 'MH Plan' objectives are optimized for measuring indentation images. The lineup includes 6 types of long working distance objectives: 10X, 20X, 50X and 100X for measuring indentation images, and 2X and 5X for enabling wide-range measurement around indentations.
- LEDs, which have a longer life, produce less heat, consume less power and are more energy efficient than incandescent bulbs, are employed for the illumination system.
- The motorized turret allows for up to 4 objective lenses and 2 indenter assemblies to be mounted at the same time.





Observation image of the indentation (50X)

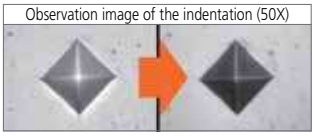

Stray light reduction around the indentation





HM-210A

SPECIFICATIONS

TYPE A Digital Hardness Tester

Model No.	HM-210 Type A	HM-210 Type A V/K	HM-220 Type A	HM-220 Type A V/K
Part No.	**64AAB305A**	**64AAB306A**	**64AAB307A**	**64AAB308A**
Fixed test force (mN)	98.07, 196.1, 294.2, 490.3, 980.7, 1961, 2942, 4903, 9807 (10gf-1000gf)		0.4903, 0.9807, 1.961, 2.942, 4.903, 9.807, 19.61, 29.42, 49.03, 98.07, 196.1, 294.2, 490.3, 980.7, 1961, 2942, 4903, 9807, 19610 (0.05 gf-2kgf)	
Arbitrary test force	≤100 gf in 1 gram increments, > 100gf in 10 gram increments		< 1 gf in .1 gf increments, ≤100 gf in 1 gram increments, > 100gf in 10 gram increments	
Test force control	Force generation by electromagnetic and automatic control (load, dwell, unload)			
Control unit	Color LCD Touch Screen			
Loading rate	60 µ/ sec		60µm/s, Variable between 2 and 60µm/s. ≤ 30 gf.	
Load dwell time	0-999 sec			
Indenter	Vickers	Vickers and Knoop	Vickers	Vickers and Knoop
Objective lenses	10x, 50x	10x, 20x, 50x	10x, 50x, 100x	10x, 50x, 100x
Objective turret	Motor driven and manual operation			
Filar eye piece	Dual Line, 10X, .01µ min			

With TV camera unit 810-454A (selectable with HM-210A/220A)

Measurement of indentation dimensions on a TV monitor reduces eye fatigue, which leads to improvement in operation efficiency in multi-point testing.



Mitutoyo

HM-200 Series with AVPAK software

For semi and fully automatic Type B and D Systems



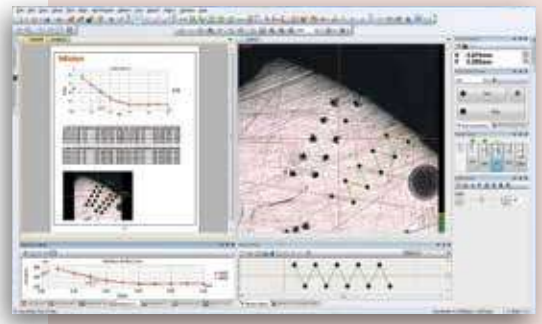

AVPAK Software



Indentation-reading example

System B (HM-210B/220B)

System B is equipped with **AVPAK-10**, a the software package that automatically measures the diagonal length of an indentation and calculates the corresponding hardness value. This means that measurement error caused by variation in operator interpretation is eliminated, thereby reducing costs.

Automatic measurement of indentation/ manual stage



System D (HM-210D/220D)

In addition to the functions of System B, System D is equipped with the autofocus function and motorized x-y stage. This function allows for automatic hardness testing, thereby increasing efficiency and reducing labor costs.

Automatic measurement of indentation / motorized XY stage / Autofocusing

System D Technical Data

Motorized X-Y Stage	Travel Max	50 x 50 mm
	Travel Min	1µ
	Table Size	130 x 130mm
	Speed Max	25mm/ sec
Motorized Focusing Stage	Max Range	1.4mm
	Min Unit	.1µ
	Max Speed	1mm/ sec
Joystick Controller Functions	Functions	X and Y Lock out
	Axis	X, Y and Z (Focus)
	Speed Control	Adjustable H,M,L
	Tester Control	Indent, Turret Position
	Other	Emergency Stop

SPECIFICATIONS

TYPE B PC-Driven Test System **TYPE D** PC-Driven Test System with motorized stage and auto focus

Model No.	HM-210 Type B	HM-210 Type B V/K	HM-220 Type B	HM-220 Type B V/K
Part No.	**64AAB323A**	**64AAB324A**	**64AAB325A**	**64AAB326A**
Model No.	HM-210 Type D	HM-210 Type D V/K	HM-220 Type D	HM-220 Type D V/K
Part No.	**64AAB380A**	**64AAB381A**	**64AAB382A**	**64AAB383A**
Fixed test force (mN)	98.07, 196.1, 294.2, 490.3, 980.7, 1961, 2942, 4903, 9807 (10gf-1000gf)		0.4903, 0.9807, 1.961, 2.942, 4.903, 9.807, 19.61, 29.42, 49.03, 98.07, 196.1, 294.2, 490.3, 980.7, 1961, 2942, 4903, 9807, 19610 (0.05 gf-2kgf)	
Arbitrary test force	≤100 gf in 1 gram increments, > 100gf in 10 gram increments		< 1 gf in .1 gf increments, ≤100 gf in 1 gram increments, > 100gf in 10 gram increments	
Test force control	Force generation by electromagnetic and automatic control (load, dwell, unload)			
Control unit	None, By PC*			
Loading rate	60 µ/ sec		60µm/s, Variable between 2 and 60µm/s. ≤ 30 gf.	
Load dwell time	0-999 sec			
Indenter	Vickers	Vickers and Knoop	Vickers	Vickers and Knoop
Objective lenses	10x, 50x	10x, 20x, 50x	10x, 50x, 100x	10x, 50x, 100x
Objective turret	Motor-driven and manual operation			
Filar eye piece	None			
CCTV camera	3 megapixel, 1/2"		3 megapixel, 1/2"	
Software	AV Pak		AV Pak	

*Must use specified PC

MZT-500

SERIES 810 — Micro Zone Test System

FEATURES

When it comes to evaluating mechanical properties of ultra-small regions of ultra-fine specimens, the MZT-500 Series models are exceptionally powerful tools in the fields of research and development and quality control. The MZT-500 can evaluate mechanical properties, which conventional hardness testing machines for fine specimens cannot measure, such as various CVD and PVD-deposited or generated films, including ion-plated films; hardness of ultra-fine cross-sections; bonding mechanical properties; and mechanical wear properties of carbon fibers, glass fibers, whiskers, etc.

- Test data
  The indentation factor can be obtained, which is related to the hardness value (partially) shown in Martens hardness test (ISO14577) and Young's modulus. Deformation characteristics in the load, dwell, and unload phases are also obtainable for use in determining properties of the specimen material.
- Hardness tests such as Vickers and Knoop hardness tests are supported.
- The balance lever vibration isolation mechanism reduces the effect of external vibrations on measurements.
- Indenter indentation depth can be measured up to a maximum of 20µm with a resolution of 0.1nm.
- Test forces between 0.1mN and 1000mN can be applied electromagnetically for evaluation of material properties in submicroscopic areas.
- Field-compatible form with cover for protection against dust and wind.

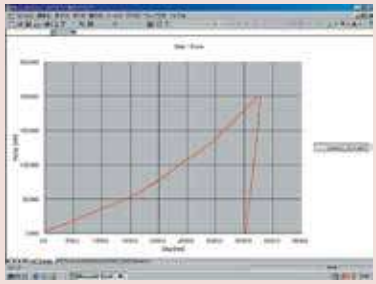

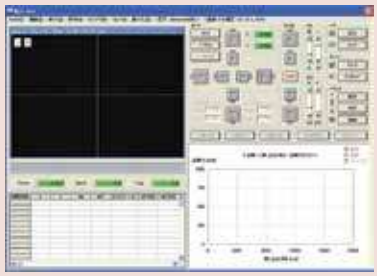



SPECIFICATIONS

Model No.	MZT-500L	MZT-500P
Order No.	**810-813A**	**810-814A**
Basic system	✔	✔
Data analysis / control device	✔	✔
Manual type XY stage (Travel range 25x25mm)	✔	—
Automatic XY stage (Travel range: 50x50mm)	—	✔

Test force loading device	Test force range: 0.1 to 1000mN
	Control resolution: 0.916µN
	Loading speed: 0.01 to 100mN/s
Indentation depth measurement	Range: 0 to 20µm
	Resolution: 0.1nm
Indenter	Type: Bercovich triangular pyramid indenter
Sample surface observation method	Camera: 1/3 inch black and white (410,000 pixels)
	Objective (monitor magnification): 100X (2500X), Optional: 10X (250X), 40X (1000X)
Specimen dimensions	Maximum height: 90mm
	Maximum depth: 90mm (From the center of the indenter axis)
Test type	Indentation test (with preliminary test force)
	Indentation test (without preliminary test force)
	Indentation depth setting test, continuous indentation test, repeated indentation test

Mitutoyo

HV110 / HV120

Series 810—Vickers Hardness Testing Machines – Type A

FEATURES

- Heavy load Vickers testing machines feature motorized force selection from 1-50kgf or .3 to 30kgf. Fully adjustable long-life LED illumination runs cool.
- A dual-line filar eyepiece combines with a color touch-screen LCD to create accurate measurements with the touch of a button.
- The motorized turret can accommodate up to 3 long working distance objective lenses for an even wider range of materials and a wide variety of anvils and x-y stages are also available.



HV120 show with optional **810-454A** CCTV Camera

SPECIFICATIONS

Model	HV110	HV120
Order No.	**810-440A**	**810-445A**
Test force	9.807N (1kgf),19.61N (2kgf),29.42N (3kgf), 49.03N (5kgf), 98.07N (10kgf), 196.1N (20kgf)294.2N (30kgf), 490.3N (50kgf)	2.942N (0.3kgf),4.903N (0.5kgf), 9.807N (1kgf),24.51N (2.5kgf),49.03N (5kgf), 98.07N (10kgf), 196.1N (20kgf)294.2N (30kgf)
Supported test method	HV, HK, HB (Light Force*), Kc	
Test force selection	Motorized	
Loading accuracy	±1%	
Load control	60μ/s, 150μ/s Automatic (loading, duration, unloading)	
Load rate	5~999 sec.	
Objective lens	2X, 5X, 10X (standard), 20X, 50X, 100X	
Measuring microscope	10X Dual-line filar	
Total magnification	20-1000X (100X Standard)	
Field of view	1,400μ (10X Lens) Type A	
Minimum reading	< 50x = 0.1μm, ≥50x = 0.01μm	
Display	Color LCD touch-screen	
Scaled conversion:	8 Types (ASTM, ISO, JIS, SAE and BS)	
Statistics:	N, Max., Min., Average, Range, High, Low, Good, Over, Under, SD(n-1), SD(n-1), SD(n) go/no-go judgment,	
Curvature correction;	0.01 to 200.00mm	
Maximum sample height	210mm Type A	
Maximum sample depth	160mm	
Maximum sample weight	20 Kg Anvil, 10 Kg with x-y Stage	
Optical path	100% Eyetube or Camera	
Output	Rs232, SPC, USB2.0	
Power supply	120 Volt AC/ 60 Hz	
Dimensions main unit (WxDxH)	9.9"x 24.7"x30.7 " (252x627x781mm)	
Mass	110lbs. (50kg)	

* Optional test forces may be required.

Optional Accessories

Lens:
11AAC712 OBJECTIVE LENS 2X
11AAC713 OBJECTIVE LENS 5X
11AAC714 OBJECTIVE LENS 20X
11AAC715 OBJECTIVE LENS 50X
11AAC716 OBJECTIVE LENS 100X

Stage
810-423 MANUAL STAGE 50X50
810-427 MANUAL STAGE 2"X 2"(In/mm)

959149 SPC cable (1m / 40")

Optical
11AAC711 "C" mount CAMERA ADAPTER
810-454A CCTV System

Indenters
19BAA060 DIAMOND INDENTER (VICKERS TYPE)
19BAA063 KNOOP DIAMOND INDENTER
19BAA281 CARBIDE-ALLOY BALL 1MM DIA.
19BAA277 CARBIDE-ALLOY INDENTER, 1MM DIA.
19BAA283 CARBIDE-ALLOY BALL, 2.5MM DIA.
19BAA279 CARBIDE-ALLOY INDENTER, 2.5MM DIA.

Additional Test Force
11AAC697 0.5 kg Brinell Weight
11AAC698 1.25 kg Brinell Weight
11AAC699 5.625 kg Brinell Weight
11AAC700 12.5 kg Brinell Weight

HV110 / HV120

Series 810—Vickers Hardness Testing Machines – Type B / D

FEATURES

- The Type B HV110/ HV120 Vickers hardness testers add computer control to make measurements even more repeatable.
- A high-resolution 3 mega-pixel camera produces crisp images that are automatically measured in less than .3 seconds.
- Various software functions such as automatic light intensity, simple to use report generator and programming wizards make tedious and repetitive testing requirements more accurate than manual testing and eliminates common operator errors.
- The Type D HV110 / 120 adds a motorized X-Y stage with up to 100mm x 100mm of travel for large samples. A motorized focusing platform is also utilized for a complete walk away system.



Type B System
show with optional PC

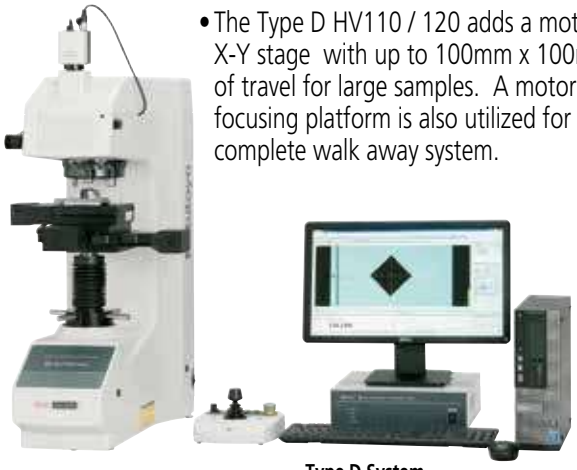

Type D System
show with optional PC

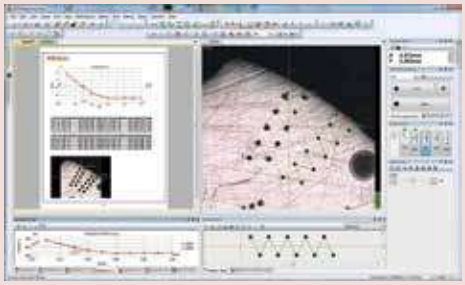

SPECIFICATIONS

Model	HV110 Main Unit Only	HV120 Main Unit Only
Order No.	**810-443A**	**810-448A**
Test force	9.807N (1kgf),19.61N (2kgf),29.42N (3kgf), 49.03N (5kgf), 98.07N (10kgf), 196.1N (20kgf)294.2N (30kgf), 490.3N (50kgf)	2.942N (0.3kgf),4.903N (0.5kgf), 9.807N (1kgf),24.51N (2.5kgf),49.03N (5kgf), 98.07N (10kgf), 196.1N (20kgf)294.2N (30kgf)
Supported test method	HV, HK, HB (Light Force**), Kc	
Measuring microscope	Optional	
Field of View w/ 10X Lens	590 x 443 µm	
Display	Via PC	
Curvature correction;	0.01 to 200.00mm	
Maximum sample height	172mm Type B, 132mm Type D	
Maximum sample depth	160mm	
Maximum sample weight	10 Kg Type B, 3 kg Type D	
Optical path	100% Eyetube or Camera	
Output	USB2.0	
Mass	110lbs. (50kg)	

*Other specifications as Type A testers
** Optional test forces may be required

Basic Configuration	Type B	Type D
Main Unit	810-443A or 810-448A	810-443A or 810-448A
AVPak-10 Software	11AAC664	11AAC664
PC***	***	***
Automatic Focus Stage		810-465
Motorized X-Y Stage 50x50		810-461A
Motorized X-Y Stage 100x100		810-462A

*** PC not included

Mitutoyo

Optional Accessories

Micro-Vickers/Vickers Hardness Testing Machine

Test Blocks

Order No.	Description	Load
64BAA173	Vickers 100HV Test Block	100gf
64BAA174	Vickers 200HV Test Block	100gf
64BAA175	Vickers 300HV Test Block	100gf
64BAA176	Vickers 400HV Test Block	100gf
64BAA177	Vickers 500HV Test Block	100gf
64BAA178	Vickers 600HV Test Block	100gf
64BAA179	Vickers 700HV Test Block	100gf
64BAA180	Vickers 800HV Test Block	100gf
64BAA181	Vickers 900HV Test Block	100gf
64BAA182	Vickers 100HV Test Block	500gf
64BAA183	Vickers 200HV Test Block	500gf
64BAA184	Vickers 300HV Test Block	500gf
64BAA185	Vickers 400HV Test Block	500gf
64BAA186	Vickers 500HV Test Block	500gf
64BAA187	Vickers 600HV Test Block	500gf
64BAA188	Vickers 700HV Test Block	500gf
64BAA189	Vickers 800HV Test Block	500gf
64BAA190	Vickers 900HV Test Block	500gf
64BAA191	Vickers 100HV Test Block	1000gf
64BAA192	Vickers 200HV Test Block	1000gf
64BAA193	Vickers 300HV Test Block	1000gf
64BAA194	Vickers 400HV Test Block	1000gf
64BAA195	Vickers 500HV Test Block	1000gf
64BAA196	Vickers 600HV Test Block	1000gf
64BAA197	Vickers 700HV Test Block	1000gf
64BAA198	Vickers 800HV Test Block	1000gf
64BAA199	Vickers 900HV Test Block	1000gf
64BAA200	Knoop 200HK Test Block	100gf
64BAA201	Knoop 300HK Test Block	100gf
64BAA202	Knoop 400HK Test Block	100gf
64BAA203	Knoop 500HK Test Block	100gf
64BAA204	Knoop 600HK Test Block	100gf
64BAA205	Knoop 700HK Test Block	100gf
64BAA206	Knoop 800HK Test Block	100gf
64BAA207	Knoop 250HK Test Block	500gf
64BAA208	Knoop 300HK Test Block	500gf
64BAA209	Knoop 400HK Test Block	500gf
64BAA210	Knoop 500HK Test Block	500gf
64BAA211	Knoop 600HK Test Block	500gf
64BAA212	Knoop 700HK Test Block	500gf
64BAA213	Knoop 800HK Test Block	500gf
64BAA214	Knoop 250HK Test Block	1000gf
64BAA215	Knoop 300HK Test Block	1000gf
64BAA216	Knoop 400HK Test Block	1000gf
64BAA217	Knoop 500HK Test Block	1000gf
64BAA218	Knoop 600HK Test Block	1000gf
64BAA219	Knoop 700HK Test Block	1000gf
64BAA220	Knoop 800HK Test Block	1000gf

*Other hardness ranges and test forces available

Indenters

Order No.	Type	Model
19BAA061	Knoop Indenter	H, HM Standard Series
19BAA058	Vickers Indenter	H, HM Standard Series
19BAA062	Knoop Indenter	MVK-H2, H3, HM114, HM220
19BAA059	Vickers Indenter	MVK-H2, H3, HM114, HM220
19BAA060	Vickers Indenter	HV, AVK-C Series

Universal Specimen Holder



Used to secure a specimen that has a measuring surface that is hard to stabilize, perpendicular to the indenter axis.

810-020

Mounted Specimen Vise



1.5" (39mm) Max Height	Diameter	
810-650-1	1"	25.4mm
810-650-2		30mm
810-650-3	1.25"	31.75mm
810-650-4	1.5"	38.1mm
810-650-5		40mm

50x50mm travel stage



Manual XY Stage Unit 50 x 50

Manual XY Stage Unit 2"x 2"

810-423 Metric

810-427 Inch/Metric

Bulbs

Order No.	Description
513667	Bulb, 12v/50w, halogen double pin type, HM series with box style illuminators
19BAA219	Bulb, 6v/20w, halogen double pin type, Later H series
19BAA095	Bulb, 6v/15w, halogen bayonet type, all E, G and early H series testers

Clamping devices (Vises)

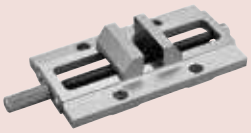

Vise

Max. opening: 3.94"(100mm)

810-017



Vise

Max. opening: 2"(51mm)

810-016

Rotary Table



Rotary Table

810-018

Round Tables



Dimensions: 7.08"(180mm)

810-037

Specimen (thin plate) Holder



Secures a plate with a thickness of .197"(5mm) or less, or foil-like specimens.

810-013

Specimen (wire) Holder

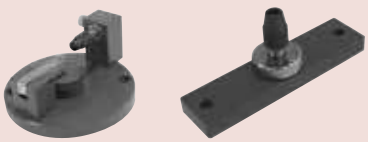

Used to horizontally or vertically secure a wire or needle specimen that has a diameter of .126"(3.2mm) or less.

810-014-1 horizontal

810-015-1 vertical

HR-521(L) / 523(L)

SERIES 810 — Rockwell Type Hardness Testing Machines

Technical Data

Preliminary test force:	29.42N, 98.07N
Test force	
Rockwell superficial:	147.1, 294.2, 441.3N
Rockwell:	588.4, 980.7, 1471N
Brinell*:	
Test force setting:	By control unit
Load control:	Automatic (loading, duration, unloading)
Load duration:	0s - 120s (1s increments)
Max. specimen height:	205mm (for standard flat anvil)
Max. specimen depth:	150mm (from the center of indenter shaft)
Stage elevation:	Manual or power drive
Control unit:	Sheetswitch type or touch-screen type
Data output:	RS-232C, Digimatic code (SPC) and Centronics
Power supply:	120V AC, 50/60Hz
Dimensions (W x D x H)	
Main unit:	250 x 670 x 605mm
Control unit:	165 x 260 x 105mm

Optional Accessories: See page K-11, 12

Various shapes of specimen can be measured. (Nose-type indenter axis mechanism has been adopted.)

The nose-type indenter mechanism allows measurement of pipe samples as well as the top surface of a flat sample.

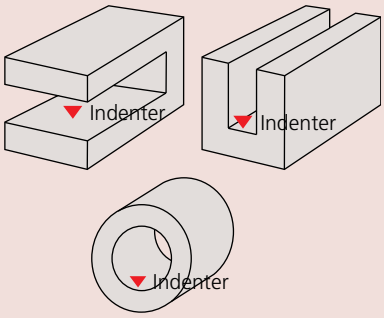



Function: Touch-screen type

- Touch-screen operation with a back-lit LCD graphic display.
- Remote selection of the test force linked to the hardness scale selection.
- Choice of message language in English, German, French, Spanish, Italian and Japanese.
- Cylindrical and spherical surface compensation.
- Data offset.
- Conversion to other hardness scales.
- Powerful statistical processing with flexible data point editing and 1024 data memory.
- Measured data editing
- Go/no-go tolerance judgment.
- Statistical processing, histogram and x̄-R chart

FEATURES

- Multiple test force generation for Rockwell, Rockwell Superficial and Light Force Brinell hardness.
- Dolphin-nose indenter arm for easy reach of interior (min. ø40mm/ø22mm*) and exterior surfaces.
  *When using an optional diamond indenter (**19BAA292**).
- Real-time electronic test force control for accurate loading. This eliminates load force overshooting.
- Indenter escape function for continuous testing at fixed table position. This eliminates instability caused by the table retraction.
- Auto-stop elevation table and automatic preliminary test force loading to provide stable test force generation.
- Complete with one flat and VEE anvil, diamond and 1/16" carbide ball indenters, 2 HRC and 1 HRBW Rockwell test blocks and an HR30N and HR30TW test block.



HR-523
810-204-03A



SPECIFICATIONS

Model		HR-521	HR521L	HR-523	HR-523L
Order No.		**810-202-03A**	**810-205-03A**	**810-204-03A**	**810-207-03A**
Preliminary Test Force		29.42N (3kgf), 98.07N (10kgf)			
Test Force	Rockwell	588.4N (60kgf), 980.7N (100kgf), 1471N (150kgf)			
	Rockwell Superficial	147.1N (15kgf), 294.2N (30kgf), 441.3N (45kgf)			
	Light Force Brinell	HBW2.5/187.5		HBW1/10,HBW1/30,HBW2.516.25, HBW2.5115.625 HBW2.5131.25, *I HBW2.5162.5, HBW5/25,HBW5/62.5, HBW5/125,HBW10/100	
Force Control		Automatic control (unloading/duration/unloading) with closed-loop feed back			
Console/Display Unit		Touch-screen operation with back-lit LCD graphic display			
Test Force Selection		By touch screen			
Table up/down drive		Manual (w/Auto-brake mechanism)		Power-Drive (for full-automatic measurement)	
Load Duration		0 to 120 sec. (1 sec. step)			
Maximum Specimen Height		8.1" (205mm)	15.5" (395mm)	8.1" (205mm)	15.5" (395mm)
Maximum Specimen Depth		5.9" (150mm)			
Display Indication Functions		Hardness value, Converted hardness value, Test conditions, go/no-go tolerance judgment, statistical processing result Rockwell/Rockwell superficial hardness testing. Continuous testing. Cylindrical/spherical surface compensation, data offset. Hardness conversion (HV, HK, HRA/B/C/D/F/G/15T/30T/45T/15N/30N/45N, HS, HB, HBW, tensile strength) Go/no-go tolerance judgment, measured data editing, data memory (max 1024 data) SPC calculation (No. of data, max/min/mean values, range, upper/lower limit values, standard deviation, No. of passing/defective) Histogram, x̄-R chart			
Data Output		RS-232C, SPC, Centronics			
Dimensions (W x D x H)		9.84" x 26.38" x 23.82" (250 x 670 x 605mm)			
Mass		60kg			

Mitutoyo

HR-320MS/430MR/430MS

SERIES 963 — Rockwell Hardness Testing Machines

FEATURES

- The new frame design allows the full 7.1" of specimen capacity without the need to cut a hole in the table.
- Simple to operate; the digital HR320 model uses a flashing bar graph to indicate when the initial test force has been reached.
- 430 models feature automatic brake and automatic start function that prevent overloading and begins test cycle. The HR430 model also includes the dial a weight system for easier load selection.
- All models are complete with Flat and VEE anvils, diamond and 1/16" carbide ball indenters, 2 HRC and 1 HRBW Rockwell blocks (MR models)s or 3 Rockwell blocks and an HR30N and HR30TW for MS testers.



HR-320MS

Rockwell/Rockwell Superficial hardness testing machine
Motorized Loading
Motor drive - Button start model



HR-430MR

Rockwell hardness testing machine
Motorized Loading
Motor drive - Automatic start model



HR-430MS

Rockwell/Rockwell Superficial hardness testing machine
Motorized Loading
Motor drive - Automatic start model

Technical Data

Preliminary test force:	29.42N*, 98.07N
Test force	
Rockwell superficial*:	147.1, 294.2, 441.3N
Rockwell:	588.4, 980.7, 1471N
Test force setting:	By dial
Load control:	Automatic (loading, duration, unloading)
Anvil:	Flat (ø64mm)
Max. specimen height:	7.1" / 180mm
Max. specimen depth:	6.5" / 165mm (from the center of indenter shaft)
Stage elevation:	Manual
Data output*:	RS-232C, Digimatic code (SPC)
Power supply:	120V AC, 50/60Hz

*HR320-430 only

SPECIFICATIONS

Order Number	963-231-10A	963-240-10A	963-241-10A
Model	HR-320MS	HR-430MR	HR-430MS
Test Scales	Rockwell and Rockwell Superficial	Rockwell	Rockwell and Rockwell Superficial
Standard	JIS B 7726 ISO 6508-2 ASTM E18-10		
Preliminary Test Force	98.07N (10kgf), 29.42 (3kgf)	98.07N (10kgf)	98.07N (10kgf), 29.42 (3kgf)
Test Force Rockwell	588.4N (60kgf), 980.7N (100kgf), 1471N (150kgf)		
Test Force Superficial	147.1N (15kgf), 294.2N (30kgf), 441.3N (45kgf)	—	147.1N (15kgf), 294.2N (30kgf), 441.3N (45kgf)
Display	Matrix Backlight LCD		
Hardness Minimum Value	0.1 HR		
Scale Conversions	HRC, HRB, HV, HBW, HS, Mpa plus offset, OK/NG		
Preliminary Test Force	Manual (with Loading Navigator)	Manual (with automatic brake-start)	
Total Test Force Control	Automatic (loading, duration, unloading)		
Loading Method	Dead Weight		
Load Duration (Dwell)	Adjustable (1s to 99s) or Manual		
Maximum Specimen Ht.	7.1" (180mm)		
Maximum Depth	6.5" (165mm)		
Data Output	RS-232C, SPC		
Power Supply	120V AC (±10%), 60Hz		
Dimensions (D x W x H)	20.6"(523mm) x 9.25"(235mm) x 30.7"(780mm)	20.6"(523mm) x 9.25"(235mm) x 30.7"(780mm)	20.6"(523mm) x 9.25"(235mm) x 30.7"(780mm)
Mass	102.07lb (46.3kg)	108.69lb (49.3kg)	110.01lb (49.9kg)

Optional Accessories

For Rockwell/Rockwell Superficial Type Hardness Testing machine



Calibration Set

Order No. 64BAA241 C Scale Set	Order No. 64BAA242 B Scale Set
Test Blocks	Test Blocks
64BAA125	64BAA126
64BAA124	64BAA132
64BAA158	64BAA135
Indenter	Indenter
64BAA072	64BAA078
Order No. 64BAA243 30N Scale Set	**Order No. 64BAA244 30T Scale Set**
Test Blocks	Test Blocks
64BAA128	64BAA129
64BAA165	64BAA140
64BAA167	64BAA130
Indenter	Indenter
64BAA073	64BAA078

Rockwell Type Diamond Indenters

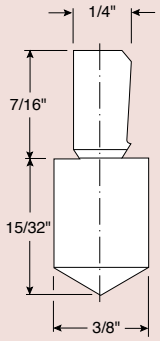

Order No.	Scale
64BAA072	C
64BAA073	N
64BAA086	A
64BAA071	C & N

Order No.	Hardness
64BAA159	HRA81/86 Rockwell Test Block
64BAA160	HRA75/79 Rockwell Test Block
64BAA161	HRA70/73 Rockwell Test Block
64BAA162	HRA65/68 Rockwell Test Block
64BAA163	HRA60/62 Rockwell Test Block
64BAA249	HRBW95/100 Rockwell Test Block
64BAA126	HRBW90/95 Rockwell Test Block
64BAA131	HRBW80/85 Rockwell Test Block
64BAA132	HRBW70/75 Rockwell Test Block
64BAA133	HRBW60/65 Rockwell Test Block
64BAA134	HRBW50/55 Rockwell Test Block
64BAA135	HRBW40/45 Rockwell Test Block
64BAA127	HRBW30/35 Rockwell Test Block
64BAA136	HRBW20/25 Rockwell Test Block
64BAA137	HRBW10/15 Rockwell Test Block
64BAA138	HRBW0/5 Rockwell Test Block
64BAA125	HRC60/65 Rockwell Test Block
64BAA157	HRC50/55 Rockwell Test Block
64BAA124	HRC40/45 Rockwell Test Block
64BAA123	HRC30/35 Rockwell Test Block
64BAA158	HRC20/25 Rockwell Test Block

Order No.	Hardness
64BAA129	HR30T74/79 Rockwell Test Block
64BAA139	HR30T70/73 Rockwell Test Block
64BAA140	HR30T63/67 Rockwell Test Block
64BAA141	HR30T56/60 Rockwell Test Block
64BAA142	HR30T49/53 Rockwell Test Block
64BAA130	HR30T43/47 Rockwell Test Block
64BAA143	HR30T36/39 Rockwell Test Block
64BAA144	HR30T29/33 Rockwell Test Block
64BAA145	HR30T22/26 Rockwell Test Block
64BAA146	HR30T15/18 Rockwell Test Block
64BAA147	HR15T90/92 Rockwell Test Block
64BAA148	HR15T86/69 Rockwell Test Block
64BAA149	HR15T83/85 Rockwell Test Block
64BAA150	HR15T80/82 Rockwell Test Block
64BAA151	HR15T77/79 Rockwell Test Block
64BAA152	HR15T72/74 Rockwell Test Block
64BAA153	HR15T70/72 Rockwell Test Block
64BAA154	HR15T68/69 Rockwell Test Block
64BAA155	HR15T64/66 Rockwell Test Block
64BAA156	HR15T61/63 Rockwell Test Block

Order No.	Hardness
64BAA222	HR45N65/70 Rockwell Test Block
64BAA223	HR45N55/60 Rockwell Test Block
64BAA224	HR45N45/50 Rockwell Test Block
64BAA225	HR45N35/40 Rockwell Test Block
64BAA226	HR45N25/30 Rockwell Test Block
64BAA128	HR30N64/69 Rockwell Test Block
64BAA164	HR30N68/73 Rockwell Test Block
64BAA165	HR30N59/64 Rockwell Test Block
64BAA166	HR30N50/55 Rockwell Test Block
64BAA167	HR30N40/45 Rockwell Test Block
64BAA168	HR15N90/93 Rockwell Test Block
64BAA169	HR15N85/88 Rockwell Test Block
64BAA170	HR15N80/83 Rockwell Test Block
64BAA171	HR15N75/77 Rockwell Test Block
64BAA172	HR15N69/72 Rockwell Test Block

Carbide Ball Indenters

Order No.	Description
19BAA515	1/16" Carbide ball indenter
19BAA504	1/8" Carbide ball indenter
19BAA505	1/4" Carbide ball indenter
19BAA506	1/2" Carbide ball indenter
19BAA507	1/16" Carbide ball (1pc.)
19BAA508	1/8" Carbide ball (1pc.)
19BAA509	1/4" Carbide ball (1pc.)
19BAA510	1/2" Carbide ball (1pc.)

Steel Ball Indenters

Order No.	Description
64BAA074	1/16" diameter steel ball indenter
19BAA078	1/16" diameter steel ball indenter (auto-discrimination type)
64BAA075	1/8" diameter steel ball indenter
64BAA079	1/8" diameter steel ball indenter (auto-discrimination type)
64BAA076	1/4" diameter steel ball indenter
64BAA080	1/4" diameter steel ball indenter (auto-discrimination type)
64BAA077	1/2" diameter steel ball indenter
64BAA081	1/2" diameter steel ball indenter (auto-discrimination type)
64BAA082	1/16" diameter spare steel ball (10 pcs)
64BAA083	1/8" diameter spare steel ball (10 pcs)
64BAA084	1/4" diameter spare steel ball (10 pcs)
64BAA085	1/2" diameter spare steel ball (10 pcs)

Mitutoyo

Optional Accessories

For Rockwell/Rockwell Superficial Type Hardness Testing machine

Flat anvil

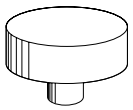

Diameter: 2.5″(64mm)
810-039
Diameter: 1.5″(38mm)
810-039-08

Round Table

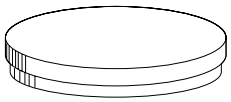

Diameter: 7.08″(180mm)
810-037

Spot anvils

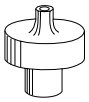

Diameter: .25″(6.4mm)
Height: .88″(22mm)
810-044



Diamond-tipped type for
Rockwell superficial hardness measurement
810-030

V-anvils

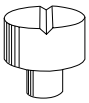

Diameter: 1.5″(38mm)
Groove width: .38″(9.7mm)
810-041

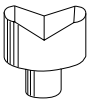

Diameter: 1.5″(38mm)
Groove width: 1.5″(38mm)
810-040

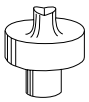

Diameter: 38″(9.7mm)
Groove width: .38″(9.7mm)
810-042

Adjustable support

Adjustable height:
13 to18.5″ (330 to 470mm)
Used to mount a V-anvil.
810-028

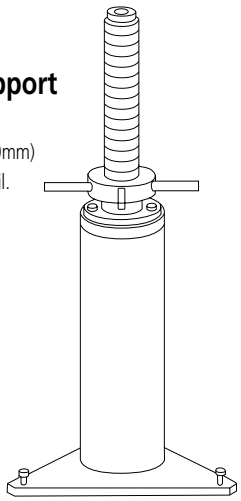

264-504-5A



937386



Optional Accessories

All tester Except HM 200:

06ADV380E: USB input tool – Tester to PC
937386: Tester to DP1-VR Printer

HM 200 Type:

06ADV380D: USB input tool – Tester to PC
936937: Tester to DP1-VR Printer

Hardmatic HH-411

SERIES 810 — Impact Type Hardness Testing Unit

HH-411 is a rebound-type portable hardness tester for metal with a compact body and high operability. It allows anyone to perform hardness testing easily at the touch of a key, so it can be used widely on various components in the field.



810-298: ASTM standard
Including the display unit, D type impactor (**810-287**) and carbide ball (**19BAA457**).

Technical Data

Impactor:	Impact hammer with integrated detector and carbide-ball tip (D type: conforming to ASTM A 956)
Display unit:	7-segment LCD
Functions:	Auto angle compensation, Offset, go/no-go judgment, Hardness scale conversion Data storage (1800 data entries) Statistical analysis (Average, Maximum, Minimum, Dispersion) Auto sleep function Impact counter display function
Testable workpiece	
Thickness:	Minimum 5mm or more
Mass:	5kg or more in mass
Test points:	5mm or more from the edge of the sample, 3mm or more to each of the tested points.
Surface roughness:	Ra 10µm or less
Power supply:	Alkaline AA battery 2pcs or optional AC adapter (battery life: 70 hours)

Standard Accessories

19BAA265 Test Block HLD800
810-291 Display Unit
810-287 Detector
19BAA460 Cable
Battery AA (Alkaline) 2pcs.

Optional Accessories

264-504-5A: Digimatic Mini-Processor DP-1VR
937387: Connecting cable for
09EAA082: Printer paper (10 rolls/set)
810-622A: Thermal printer DUP-414
19BAA285: Thermal printer connecting cable
19BAA157: Thermal printer paper
19BAA238: RS-232C connecting cable for PC
06AEG302JA: AC adapter of display unit
19BAA243: Hardness test block (880HLD)
19BAA244: Hardness test block (830HLD)
19BAA245: Hardness test block (730HLD)
19BAA246: Hardness test block (620HLD)
19BAA247: Hardness test block (520HLD)
19BAA248: Support ring for convex surface of cylinder (R10 - R20)
19BAA249: Support ring for convex surface of cylinder (R14 - R20)
19BAA250: Support ring for convex surface of sphere (R10 - R27.5)
19BAA251: Support ring for concave surface of sphere (R13.5 - R20)
19BAA457: Carbide ball for D, DC, D+15 type impactors
19BAA458: Ball shaft for DL type impactor
810-287: D type impactor UD-411
810-288: DC type impactor UD-412
810-289: D+15 type impactor UD-413
810-290: DL type impactor UD-414

SPECIFICATIONS

Model	HH-411		
Order No.	**810-298**		
Hardness Range	L-Value (ASTM A956)		
Detector	Input device D (carbide ball)		
Display	**Hardness**	**Range**	**Resolution**
	HL	1-999 HL	1 HL
	HV	43-950 HV	1 HV
	HB	20-894 HB	1 HB
	HRC	19.3-68.2 HRC	0.1 HRC
	HRB	13.5 - 101.7 HRB	0.1 HRB
	HS	13.2 - 99.3 HS	0.1 HS
	HTN	499 - 1996 Mpa	1 Mpa
Functions	Conversions: HL,HV, HB, HRC, HRB, HS, HTN Judgment: go/no go Offsetting Memory: 1,800 data		
Indentation Direction	Any direction		
Output	RS-232C, SPC		
Power supply	Alkaline AA Battery 2pcs.		
Dimensions	Detector: (Dia. X H) 1.10" x 6.89" (28 x 175mm) Display: (W x D x H) 2.76" x 4.33" x 1.38" (70 x 110 x 35mm)		
Mass	Detector: .26lbs (120g) Display: .44lbs (200g)		

Impactors (Optional accessories)

Various impactors can be connected to the display unit.



810-288
Use for inner walls of cylinders. The grip is short to allow easy positioning within a cylinder.



810-289
Use for concave workpieces such as gear teeth, ball bearing races, etc.



810-290
Use for gear teeth, welded corners, etc.

Hardmatic HH-300

SERIES 811 — Durometers for Rubber and Plastics Hardness Testing

FEATURES

Digital / Dial Durometers are suitable for testing the nature of the following materials — natural rubber, neoprene, polyesters, P.V.C., leather, nitrite rubber, wax, vinyl, cellulose acetates, glass polystyrene, etc.



Compact Digital **811-336-10**
Compact Dial **811-335-10**



Long Leg Digital **811-332-10**
Long Leg Dial **811-331-10**

Technical Data

- Designed in accordance with the ASTM D 2240, ISO868, ISO 7619, DIN 53 505, JIS K 6253, and JIS K 7215 specifications.
- Units are available in both Shore A and Shore D scales, and will test a wide variety of applications.
- The Digital Durometer is provided with data hold function, permitting the operator to make an error-free reading on the LCD screen.
- The Dial Durometer is provided with a peak retaining hand for error-free reading.





SPECIFICATIONS

Order No.	Digital	**811-330-10**	**811-336-10**	**811-336-11**	**811-332-10**	**811-338-10**	**811-338-11**	**811-334-10**
	Dial	**811-329-10**	**811-335-10**	**811-335-11**	**811-331-10**	**811-337-10**	**811-337-11**	**811-333-10**
Model No.	Digital	HH-330	HH-336	HH-336	HH-332	HH-338	HH-338	HH-334
	Dial	HH-329	HH-335	HH-335	HH-331	HH-337	HH-337	HH-333
Scale		Shore E	Shore A			Shore D		
Applications		Soft Rubber, Sponge, Felt, Hard Foam	Natural rubber, soft elastomers, etc.			Hard elastomers, plastics, hard rubber, ebonite, etc.		
Resolution		0.1 (digital) or 1 (dial)				0.1 (digital) or 1 (dial)		
Range		HA: 10 - 90				HD: 20 - 90		
Standards	ASTM D 2240	—	✓	✓		✓	✓	
	ISO 868	—	✓	✓		✓	✓	
	ISO 7619	—	✓	✓		✓	✓	
	DIN 53 505	—	—	✓		—	✓	
	JIS K 6253	✓	✓	✓		✓	✓	
	JIS K 7215	—	✓	✓		✓	✓	
Pressure foot		44 x 18mm	44 x 18mm	ø18mm		44 x 18mm	ø18mm	
Spring force (mN)		WE=550+HE	WA=550+75HD (HA:Reading 10-90)			WD=444.5HD (HD:Reading 20-90)		
Indenter		Sphere (Tip diameter: 0.79mm)	Blunt taper (Tip diameter: 0.79mm)			Sharp point (Tip curvature: 0.1±0.01mm)		
Tip angle		—	35°±0.25°			30°±0.5°		
Indenter diameter		5mm	1.25mm					
Indenter protrusion		2.5mm						
Functions		Digital: Data hold, Zero -setting, SPC output, Power ON/OFF (Power supply: SR44 x 1pc.) Analog Durometer: Peak retaining hand						
Type		Compact	Compact		Long-leg	Compact		Long-leg
Dimensions (WxDxH)	Digital	60 x 28.5 x 151	60 x 28.5 x 151mm		60 x 28.5 x 193mm	60 x 28.5 x 151mm		60 x 28.5 x 193mm
	Dial	56 x 33.5 x 144mm	56 x 33.5 x 144mm		56 x 33.5 x 186mm	56 x 33.5 x 144mm		56 x 33.5 x 186mm
Mass	Digital	290g	290g		310g	290g		310g
	Dial	300g	300g		320g	300g		320g

Hardmatic HH-300

Test Block Set



64AAA964



64AAA963



905693

811-332-10

Testing stand applications

These stands are used to mount Durometers. They allow constant-pressure hardness measurement by pressing the Durometer vertically on a workpiece.

- Anyone can perform repeatable hardness measurement due to fewer possibilities of human error and measurement variations.
- The supplied weights can be attached directly to a Durometer and allow constant-pressure hardness measurement of large samples for which a stand cannot be used.
- The supplied weights are used for calibrating the spring tension of Durometers.

Item No.	Description
64AAA964	Calibration Set (Shore A Scale) Test Block 30* DURO (Blue) Test Block 60* DURO (Yellow) Test Block 90* DURO (Gray) Mahogany Box
64AAA590	Calibration Set (Shore D Scale) Test Block 20* DURO (Blue) Test Block 40* DURO (Gray) Test Block 80* DURO (Black)
64AAA962	"A" Scale Durometer Stand
64AAA794	"A" Scale Durometer Stand with Air Damper
64AAA796	Combination "D" & "A" Scale Durometer Stand
64AAA963	O-Ring Fixture Set 1/16", 3/32", 1/8", 3/16" and 1/4" O-Ring cross sections
264-504-5A	Digimatic Miniprocessor with printer
905693	Connecting Cable 40" (1m) for Durometer and Digimatic Miniprocessor

* Values shown are nominal only. Test Block Size 2" x 2" x 1/4"

Mitutoyo

Quick Guide to Precision Measuring Instruments

Hardness Testing Machines

Hardness Test Methods and Guidelines for Selection of a Hardness Testing Machine

Material / Test Method	Micro Vickers	Micro surface material characteristics	Vickers	Rockwell	Rockwell Superficial	Durometer	Rebound type portable	Brinell	Shore
IC wafer	●	●							
Carbide, ceramics (cutting tool)		▲	●	●					
Steel (heat-treated material, raw material)	●	▲	●	●	●		●		●
Non-ferrous metal	●	▲	●	●	●		●		
Plastic		▲		●		●			
Grinding wheel				●					
Casting								●	
Sponge, rubber						●			
Shape									
Thin metal sheet (safety razor, metal foil)	●	●	●		●				
Thin film, plating, painting, surface layer (nitrided layer)	●	●							
Small parts, acicular parts (clock hand, sewing-machine needle)	●	▲							
Large specimen (structure)							●	●	●
Metallic material configuration (hardness for each phase of multilayer alloy)	●	●							
Plastic plate	▲	▲		●		●			
Sponge, rubber plate						●			
Inspection, judgment									
Strength or physical property of materials	●	●	●	●	●	●	▲	●	●
Heat treatment process	●		●	●	●		▲		▲
Carburized case depth	●		●						
Decarburized layer depth	●		●		●				
Flame or high-frequency hardening layer depth	●		●	●					
Hardenability test			●	●					
Maximum hardness of a welded spot			●						
Weld hardness			●	●					
High-temperature hardness (high-temperature characteristics, hot-workability)			●						
Fracture toughness (ceramics)	●		●						

Key: ● Well-suited ▲ Reasonably suited

Methods of Hardness Measurement

(1) Vickers

Vickers hardness is a test method that has the widest application range, allowing hardness inspection with an arbitrary test force. This test has an extremely large number of application fields particularly for hardness tests conducted with a test force less than 9.807N (1kgf). As shown in the following formula, Vickers hardness is a value determined by dividing test force F (N) by contact area S (mm^2) between a specimen and an indenter, which is calculated from diagonal length d (mm, mean of two directional lengths) of an indentation formed by the indenter (a square pyramidal diamond , opposing face angle θ=136°) in the specimen using a test force F (N). k is a constant (1/g=1/9.80665).

$$HV=k\frac{F}{S}=0.102\frac{F}{S}=0.102\frac{2F\sin\frac{\theta}{2}}{d^2}=0.1891\frac{F}{d^2}$$

F:N
d:mm

The error in the calculated Vickers hardness is given by the following formula. Here, Δd_1, Δd_2, and 'a' represent the measurement error that is due to the microscope, an error in reading an indentation, and the length of an edge line generated by opposing faces of an indenter tip, respectively. The unit of $\Delta\theta$ is degrees.

$$\frac{\Delta HV}{HV}\fallingdotseq\frac{\Delta F}{F}-2\frac{\Delta d_1}{d}-2\frac{\Delta d_2}{d}-\frac{a^2}{d^2}\ 3.5\times10^{-3}\Delta\theta$$

(2) Knoop

As shown in the following formula, Knoop hardness is a value obtained by dividing test force by the projected area A (mm^2) of an indentation, which is calculated from the longer diagonal length d (mm) of the indentation formed by pressing a rhomboidal diamond indenter (opposing edge angles of 172°30' and 130°) into a specimen with test force F applied. Knoop hardness can also be measured by replacing the Vickers indenter of a microhardness testing machine with a Knoop indenter.

$$HK=k\frac{F}{A}=0.102\frac{F}{A}=0.102\frac{F}{cd^2}=1.451\ \frac{F}{d^2}$$

F:N
d:mm
c:Constant

(3) Rockwell and Rockwell Superficial

To measure Rockwell or Rockwell Superficial hardness, first apply a preload force and then the test force to a specimen and return to the preload force using a diamond indenter (tip cone angle: 120°, tip radius: 0.2mm) or a sphere indenter (steel ball or carbide ball). This hardness value is obtained from the hardness formula expressed by the difference in indentation depth h (μm) between the preload and test forces. Rockwell uses a preload force of 98.07N, and Rockwell Superficial 29.42N. A specific symbol provided in combination with a type of indenter, test force, and hardness formula is known as a scale. Japanese Industrial Standards (JIS) define various scales of related hardness.

Relationship Between Vickers Hardness and the Minimum Allowable Thickness of a Specimen

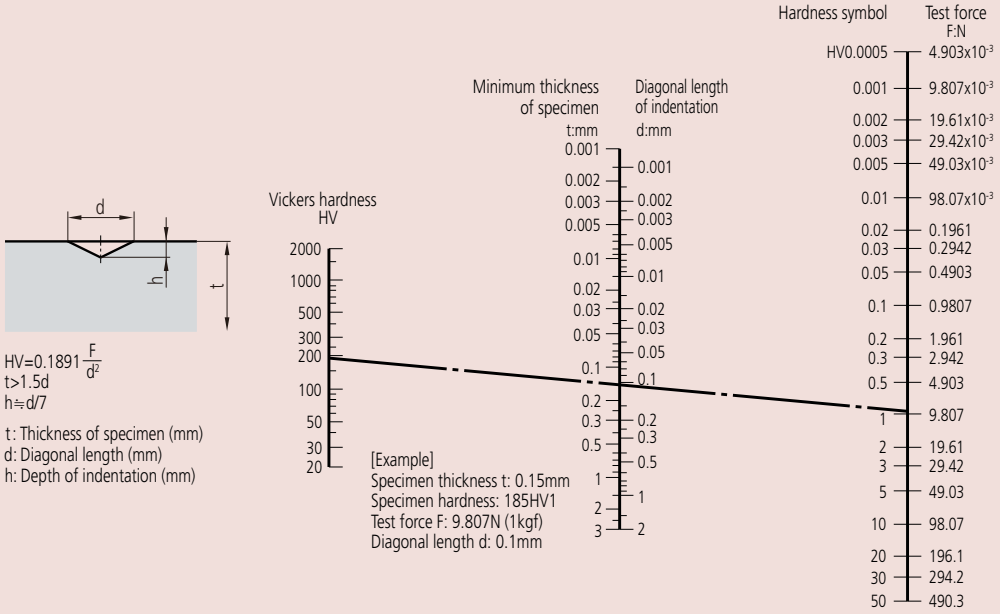

Relationship Between Rockwell/Rockwell Superficial Hardness and the Minimum Thickness of a Specimen

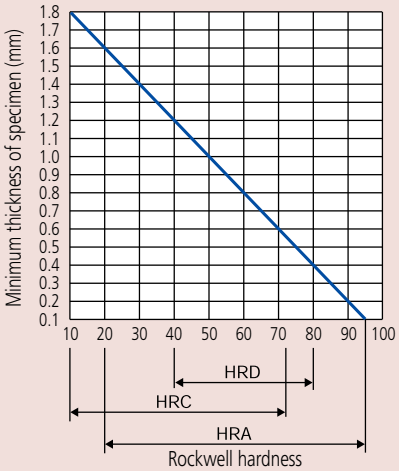

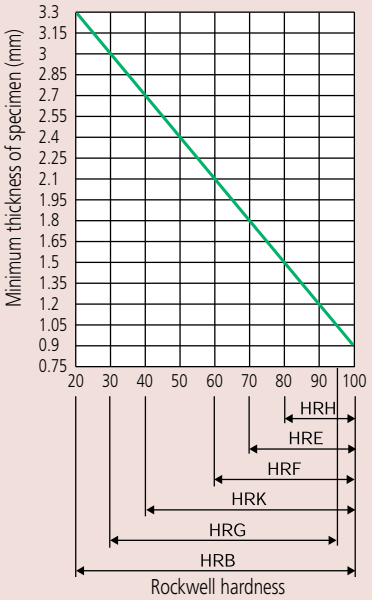

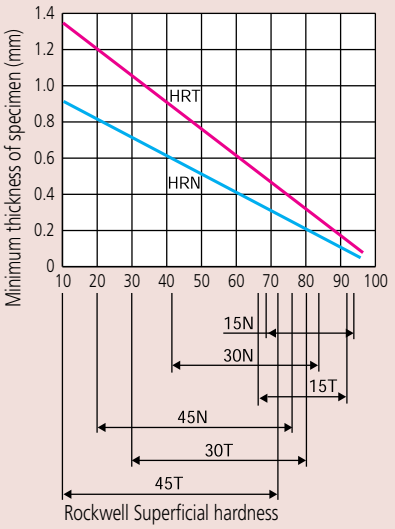

Rockwell Hardness Scales

Scale	Indenter	Test force	Application
A	Diamond	588.4N	Carbide, sheet steel
D		980.7N	Case-hardened steel
C		1471N	Steel (100HRB or more to 70HRC or less)
F	Sphere of 1.5875mm diameter	588.4N	Bearing metal, annealed copper
B		980.7N	Brass Hard aluminum alloy, beryllium copper, phosphor bronze
G		1471N	
H	Sphere of 3.175mm diameter	588.4N	Bearing metal, grinding wheel
E		980.7N	Bearing metal
K		1471N	Bearing metal
L	Sphere of 6.35mm diameter	588.4N	Plastic, lead
M		980.7N	
P		1471N	
R	Sphere of 12.7mm diameter	588.4N	Plastic, lead
S		980.7N	
V		1471N	

Rockwell Superficial Hardness Scales

Scale	Indenter	Test force	Application
15-N	Diamond	147.1N	Thin surface-hardened layer on steel such as carburized or nitrided
30-N		294.2N	
45-N		441.3N	
15-T	Sphere of 1.5875mm diameter	147.1N	Sheet of mild steel, brass, bronze, etc.
30-T		294.2N	
45-T		441.3N	
15-W	Sphere of 3.175mm diameter	147.1N	Plastic, zinc, bearing alloy
30-W		294.2N	
45-W		441.3N	
15-X	Sphere of 6.35mm diameter	147.1N	Plastic, zinc, bearing alloy
30-X		294.2N	
45-X		441.3N	
15-Y	Sphere of 12.7mm diameter	147.1N	Plastic, zinc, bearing alloy
30-Y		294.2N	
45-Y		441.3N	

Mitutoyo Quality











People – Quality starts with our people. Our team is comprised of the best and the brightest in the industry.

Confidence – Confidence you have each time you rely on a Mitutoyo product.

Reliability – Reliability of the product that you use many times every day.

Accuracy – Accuracy you need to preserve tight machining tolerances.

Relationship – Relationships you have formed with Mitutoyo staff and distributors.

Longevity – Longevity of a tool or instrument that maintains factory specifications.

Savings – Savings that are realized by implementing metrology solutions that reduce production costs.

Feel – Feel of a caliper or micrometer that you have come to expect.

Pride – Pride you feel when you produce the best manufactured product possible.

L



Coordinate Measuring Machines

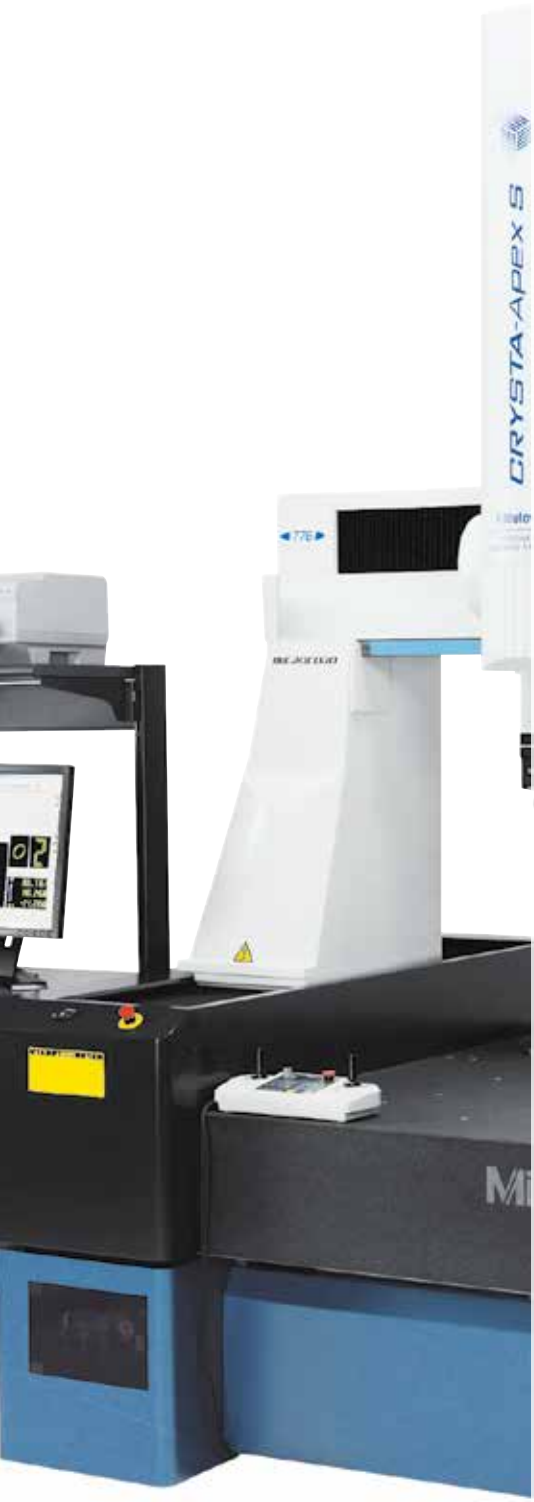

NEW-STYLE
Vision Measuring Systems



SurfaceMeasure Probes
(Laser scanning probes—non-contact)



CRYSTA-Apex EX 500T w/PH-20 Probe

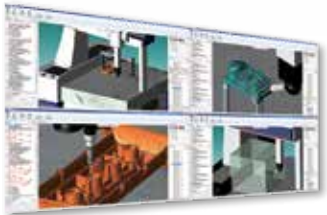

MiCAT Planner



LEGEX 574

INDEX

Coordinate Measuring Machines	
Mitutoyo CMM Accuracy Statements	L-2
Crysta-Plus M Series 196 — Manual Floating CMM	L-3
CRYSTA-Apex S 500/700/900 Series 191 — Standard CNC	L-4
CRYSTA-Apex S 900/1200 Series 191 — Standard CNC CMM	L-5
CRYSTA-Apex EX 500T/700T/900T Series - PH20-Equipped 5-Axis CNC CMM	L-6
CRYSTA-Apex EX 1200R Series — REVO-Equipped 5-Axis CNC CMM	L-7
CRYSTA-Apex S1600/2000 Series 191 — Standard CNC CMM	L-8
STRATO-Apex 500/700/900 Series 355 — High-Accuracy CNC CMM	L-9
STRATO-Apex 1600 Series 355 — High-Accuracy CNC CMM	L-10
FALCIO Apex 2000/3000 Series 355 — High-Accuracy Large CNC CMM	L-11
LEGEX 500/700/900/1200 Series 356 — Ultra-High Accuracy CNC CMM	L-12
MACH-V9106 Series 360 – Inline CNC CMM	L-13
MACH-3A 653 Series 360 – Inline CNC CMM	L-13
MACH KO-GA-ME Series 360 – Inline CNC CMM	L-14
CARBapex / CARBstrato Series – Car Body Measuring System CNC CMM	L-15
Software and Probes	
MCOSMOS Software for Manual / CNC Coordinate Measuring Machines	L-16,17
MiCAT Planner - Automatic Measurement Program Generation Software	L-18,19
CMM Probe & Change Rack Options – Touch-Trigger Probe System	L-20
CMM Probe & Change Rack Options – Motorized Probe Heads	L-21
Non-Contact CMM Probe Options – SurfaceMeasure 606/610/1010/606T	L-22,23
MSURF Software for Manual / CNC Coordinate Measuring Machines	L-24,25
Non-Contact CMM Probe Options – QVP Quick Vision Probe	L-26
CMM Surface Roughness Measuring – CMM Surftest Probe	L-27
Accessories	
Mitutoyo Styli Kits	L-28
Mitutoyo ECO-FIX Kit Fixture Systems	L-29

Surftest Probe
(surface finish)



MACH Kogame



Mitutoyo

Mitutoyo CMM Accuracy Statements

The accuracy statements specified on the following pages for Mitutoyo CMM's are based on ISO standards. The following is a brief description of these standards.

Performance Assessment Method of Coordinate Measuring Machines

CMM accuracy is specified in accordance to international standards, the ISO 10360 series of standards, and entitled "Acceptance and Reverification Test for CMMs." ISO 10360 consists of multiple parts, with each part describing tests that apply to various configuration and components of CMMs.

Table 1 JIS B 7440 (2003) Series

	Item	JIS Standard No.	Year of issue
1	Terms	ISO 10360-1	2000
2	Dimensional measurement	ISO 10360-2	2009
3	Rotary table-equipped CMM	ISO 10360-3	2000
4	Scanning measurement	ISO 10360-4	2000
5	Probing systems	ISO 10360-5	2010

Maximum Permissible Measuring Error $E_{0,MPE}$ ISO 10360-2:2009

This volumetric test procedure requires that a coordinate measuring machine (CMM) is made to perform a series of five different length measurements in each of seven directions, as shown in Figure 1, to produce a set of 35 measurements. This sequence is then repeated twice more to produce 105 measurements in all. If these test values are equal to or less than the limits specified by the manufacturer, then the performance of the CMM has been determined to meet its specification. This test procedure is a part of Mitutoyo America Corporation's A2LA-accredited calibration of Mitutoyo CMMs.

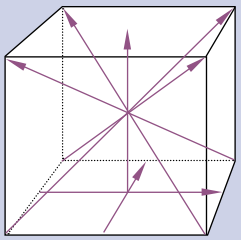

Figure 1 Typical test measurement directions within the CMM measuring volume

Maximum Permissible Measuring Error $E_{150,MPE}$ ISO 10360-2:2009

This test is an extension of the E0 test but uses a probe tip that is offset a default length of 150 mm perpendicular to the ram axis of the CMM (typically the Z-axis). Five different lengths are measured along two different planar diagonals to produce 10 measurements. This sequence is then repeated twice more to produce 30 measurements in all. If these test values are equal to or less than the specified limits, then the performance of the CMM has been determined to meet its specification.
This test is not part of Mitutoyo America's standard A2LA-accredited CMM calibration procedure and is quoted upon request.

Maximum Permissible Limit Repeatability of the Range $R_{0,MPL}$ ISO 10360-2:2009

This test of repeatability is not a separate test but is determined directly from the E0 test values. For each of the 35 sets of three repeated length measurements, the difference between the maximum and minimum of the three test values is calculated. If these 35 calculated test values are equal to or less than the specified limits, then the CMM has been determined to meet its specification.
This test is not part of Mitutoyo America's standard A2LA-accredited CMM calibration procedure and is quoted upon request.

Maximum Permissible Scanning Probing Error MPE_{THP} ISO 10360-4:2000

This is the accuracy standard for a CMM if equipped with a scanning probe. The test procedure under this standard is to perform a scanning measurement of 4 planes on the standard sphere and then, for the least squares sphere center calculated using all the measurement points, calculate the range (dimension 'A' in Figure 2) in which all measurement points exist. Based on the least squares sphere center calculated above, calculate the distance between the calibrated standard sphere radius and the maximum measurement point or minimum measurement point, and take the larger distance (dimension 'B' in Figure 2). If both calculated values are less than the specified limits, this scanning probe test is passed.

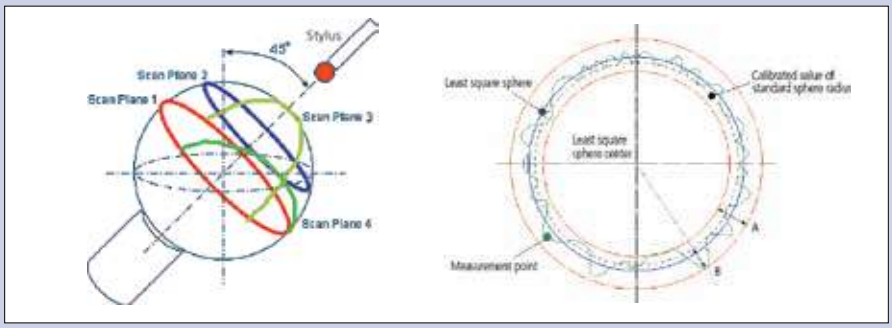

Figure 2 Target measurement planes for the maximum permissible scanning probing error and its evaluation concept

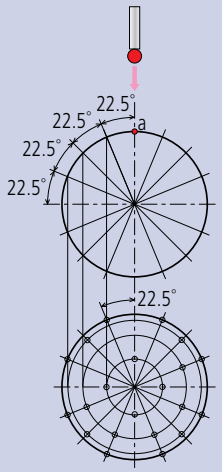

Figure 3 Target points on standard sphere for determining the Maximum Permissible Probing Error

Maximum Permissible Probing Error $P_{FTU,MPE}$ ISO 10360-5:2010

The test procedure under this standard is that a probe is used to measure defined target points on a standard sphere (25 points, as in Figure 3) and the result used to calculate the position of the sphere center by a least squares method. Then the distance R from the sphere center for each of the 25 measurement points is calculated, and the radius difference Rmax - Rmin is computed. If this final calculated value is equal to or less than the specified value, the probe has passed the test.

CRYSTA-Plus M

SERIES 196 — Manual Floating CMM



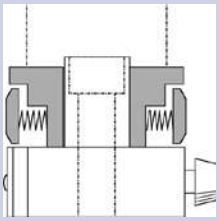

Ergonomically designed guide grip on Z-axis for reliable measurement
(only for Crysta-Plus M776 and M7106)

One-touch air clamp and fine feed for rapid and easy positioning





Crysta-Plus M443

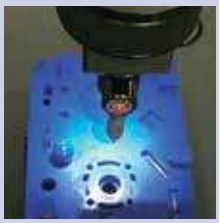



Probe illumination (optional) to illuminate the probe and styli directly and brighten the working field

Manual floating CMMs were developed in quest for high-accuracy, low-cost and easy operation. The Crysta-Plus M is suitable to measure a wide range of applications from a simple dimension to a complex form. The scale systems on Mitutoyo high-precision models use a high-performance linear encoder (manufactured by Mitutoyo) for detecting axis position. In addition, various technologies have been used in the structure, part processing and assembly to provide high-accuracy measurement.

The Crysta-Plus M700 series has a large main unit and is equipped with a mobile clamp so that one-touch clamping on each axis can be performed by hand. Continuous fine feed over the entire measuring range can be performed.

FEATURES

- Smooth operation utilizing high-precision air bearings and lightweight moving members.
- Continuous fine feed over the entire measuring range.
- One-touch air clamp for each axis.

Crysta-Plus M574





MH20i
see page L-20



Crysta-Plus M7106

SPECIFICATIONS

Type: Bridge	Model No.	Crysta-Plus M443	Crysta-Plus M574	Crysta-Plus M7106
Range	X axis	15.74″ (400mm)	19.68″ (500mm)	27.55″ (700mm)
	Y axis	15.74″ (400mm)	27.55″ (700mm)	39.36″ (1000mm)
	Z axis	11.81″ (300mm)	15.74″ (400mm)	23.62″ (600mm)
Resolution		0.000019″ (0.0005mm)		
Work table	Material	Granite		
	Size	24.56″ x 31.69″ (624mm x 805mm)	30.07″ x 46.25″ (764mm x 1175mm)	35.43″ x 68.50″ (900mm x 1740mm)
	Tapped insert	M8 x 1.25mm		
Workpiece	Max. height	18.89″ (480mm)	23.22″ (590mm)	31.49″ (800mm)
	Max. load	396 lbs. (180kg)		1,763 lbs. (800kg)
Mass (incl. stand)		793 lbs. (360kg)	1,424 lbs. (646kg)	3,968 lbs. (1800kg)
Dimensions W x D x H		38.62 x 41.22 x77.44″ (981 x 1047 x 1967mm)	56.45 x 44.17 x 89.25″ (1434 x 1122 x 2267mm)	57.48 x 79.40 x 111.81″ (1460 x 2017 x 2840mm)
Air Supply	Pressure	50.7 PSI (0.35MPa)		58.0 PSI (0.4MPa)
	Consumption	1.76CFM (50L/min)		
	Source	3.53CFM (100L/min)		
ISO-10360-2: 2001				
19-21°C (66.2-69.8°F) TP20:	E	(3.0+4.0L/1000)µm	(3.5+4.0L/1000)µm	(4.5+4.5L/1000)µm
	R	4µm		5µm

Stylus Configurations for ISO Tests	
TP20:	Ø4mm x L10mm

Environment	19-21°C (66.2-69.8°F)
Rate of change	2.0C° or less per hour 5.0C° or less per day
Gradient	1.0C° or less per meter vertical & horizontal

See page L-2 for explanation of ISO accuracy statements

Mitutoyo

CRYSTA-Apex S 500/700/900

High-performance, low-price CNC Coordinate Measuring Machine that meets global standards

SERIES 191 — Standard CNC CMM

High accuracy in the 1.7µm class

The CRYSTA-Apex S is a high-accuracy CNC coordinate measuring machine that guarantees a maximum permissible error of $*E_{0,MPE}$ = (1.7+3L/1000)µm [500/700/900 Series]. Comparing the CRYSTA-Apex S with CMMs offering $*E_{0,MPE}$ of approximately (2.5+4L/1000)µm where a required tolerance on a dimension is ±0.02 mm, then the measuring machine uncertainty should be no more than one-fifth (ideally one-tenth) of that, i.e. 4µm. This means that with a general purpose CMM, when the measured length exceeds 14.8"(375mm), machine uncertainty exceeds one-fifth of the dimension tolerance in this case. In contrast, as shown in the figure on the right, with the CRYSTA-Apex S the measurement uncertainty remains within one-fifth of the dimension tolerance up to 30.2" (766mm). The higher accuracy specification of the CRYSTA-Apex S, therefore, gives it more than double the effective measuring range in terms of accuracy-guarantee capability in this case.

**ISO 10360-2:2009*

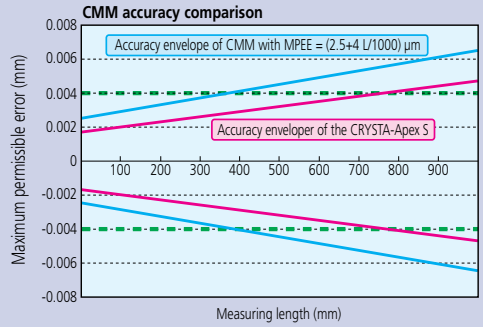



Surftest
(surface finish)
See page L-27



CRYSTA-Apex S544



CRYSTA-Apex S776



CRYSTA-Apex S9106

SPECIFICATIONS

Type: BRIDGE	Model No.	CRYSTA-Apex S 544	CRYSTA-Apex S 574	CRYSTA-Apex S 776	CRYSTA-Apex S 7106	CRYSTA-Apex S 9106	CRYSTA-Apex S 9166	CRYSTA-Apex S 9206
Range	X axis	19.68" (500mm)		27.55" (700mm)		35.43" (900mm)		
	Y axis	15.74" (400mm)	27.55" (700mm)		39.36" (1000mm)		62.99" (1600mm)	78.73" (2000mm)
	Z axis	15.74" (400mm)		23.62" (600mm)				
Resolution		0.000004" (0.0001mm)						
Guide Method		Air bearing on each axis						
Maximum Drive Speed 3D		20.43"/s (519mm/s)						
Maximum Acceleration 3D		0.23G (2,309mm/s²)						
Work table	Material	Granite						
	Size	25.11 x 33.86" (638 x 860mm)	25.11 x 45.67" (638 x 1160mm)	34.64 x 55.90" (880 x 1420mm)	34.64 x 67.71" (880 x 1720mm)	42.51 x 67.71" (1080 x 1720mm)	42.51 x 91.33" (1080 x 2320mm)	42.51 x 107.08" (1080 x 2720mm)
	Tapped insert	M8 x 1.25mm						
Workpiece	Max. height	21.45" (545mm)		31.49" (800mm)				
	Max. load	396 lbs. (180kg)		1,763 lbs. (800kg)	2,204 lbs. (1000kg)	2,645 lbs. (1200kg)	3,306 lbs. (1500kg)	3,968 lbs. (1800kg)
Mass (incl. stand & controller)		1,135 lbs. (515kg)	1,377 lbs. (625kg)	3,692 lbs. (1675kg)	4,301 lbs. (1951kg)	4,918 lbs. (2231kg)	6,322 lbs. (2868kg)	8,624 lbs. (3912kg)
Dimensions W x D x H		42.60x44.17x86.02" (1082x1122x2185mm)	42.60x57.40x86.02" (1082x1460x2185mm)	57.87x64.96x107.48" (1470x1650x2730mm)	57.87x76.77x107.48" (1470x1950x2730mm)	65.74x76.77x107.48" (1670x1950x2730mm)	65.74x105.90x107.48" (1670x2690x2730mm)	65.74x121.65x107.48" (1670x3170x2730mm)
ISO-10360-2:2009 $E_{0,MPE}$								
18-22°C (64.4-71.6°F)	TP200:	(1.9+3L/1000)µm						
	MPP310/SP25:	(1.7+3L/1000)µm						
16-26°C (60.8-78.8°F)	TP200:	(1.9+4L/1000)µm						
	MPP310/SP25:	(1.7+4L/1000)µm						
ISO-10360-2:2009 $E_{150,MPE}$ †								
18-22°C (64.4-71.6°F)	TP200:	(2.4+3L/1000)µm						
	MPP310/SP25:	(1.7+3L/1000)µm						
16-26°C (60.8-78.8°F)	TP200:	(2.4+4L/1000)µm						
	MPP310/SP25:	(1.7+4L/1000)µm						
ISO-10360-2:2009 $R_{0,MPL}$ †								
	TP200:	1.5µm		1.9µm				
	MPP310/SP25:	1.3µm						
ISO-10360-4 MPE_{THP}/MPT_{THP} †								
	SP25:	2.3µm/50sec						
	SP80:	N/A		2.0µm/50sec				
	MPP310:	1.8mm/90sec			1.8mm/80sec			
ISO-10360-5: 2010 $P_{FTU,MPE}$								
	TP200:	1.9µm						
	SP25:	1.7µm						
	MPP310:	1.5µm		1.7µm				

Stylus Configurations for ISO Tests	
TP200:	Ø4mm x L10mm
SP25/SP80:	Ø4mm x L50mm
MPP310Q:	Ø4mm x L18mm

Air Supply	500	700/900
Pressure	58.0 PSI (0.4MPa)	
Consumption	1.76CFM (50L/min)	2.11CFM (60L/min)
Source	3.53CFM (100L/min)	

Environment	18-22°C (64.4-71.6°F)	16-26°C (60.8-78.8°F)
Rate of change	2.0C° or less per hour 2.0C° or less per day	2.0C° or less per hour 5.0C° or less per day
Gradient	1.0C° or less per meter vertical & horizontal	

† This test is not part of Mitutoyo America's standard A2LA-accredited CMM calibration procedure and is quoted upon request.

See page L-2 for explanation of ISO accuracy statements

CRYSTA-Apex S 900/1200

SERIES 191 — Standard CNC CMM





Integrated Y-Axis in Granite Table

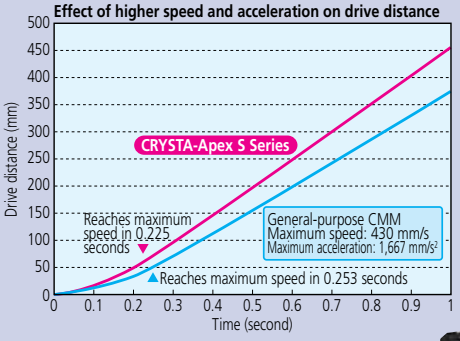

Designed for high rigidity

As is the case with Mitutoyo's conventional CMMs, various structures are employed in the CRYSTA-Apex S in order to give the body higher rigidity. The Y-axis guide rail, which is attached to one side of the granite surface plate, shows very little deterioration with use, and thus promises to maintain high accuracy for a long time. The air bearings located on the bottom face, in addition to those at the front, rear, and upper surfaces of the slider unit of the X-axis, minimize vibration even during high-speed, high-acceleration movement, thus ensuring stable linear motion.

Supported Probe Systems			
Type	**Probe**	**AS500**	**AS700/900/1200**
TOUCH TRIGGER PROBES	MH20i	●	●
	TP20	●	●
	TP200	●	●
	TP7	●	●
SCANNING PROBES	SP25	●	●
	MPP	●	●
	SP80	—	●
LASER PROBES	SM606	▲	●
	SM606T	▲	●
	SM610	▲	●
	SM1010	▲	●
SURFACE FINISH	SurfTest	●	●
OPTICAL	QVP	▲	●
	CF20	●	●

● Supported ▲ Not Recommended — Not supported

See page L-20 through L-27 for probe system information



CRYSTA-Apex S9106



CRYSTA-Apex S122010



SP25 Probe
(Scanning)
See page L-21



Quick Vision Probe
(Optical probe–non-contact)
See page L-26

SPECIFICATIONS

Type: BRIDGE	Model No.	CRYSTA-Apex S 9108	CRYSTA-Apex S 9168	CRYSTA-Apex S 9208	CRYSTA-Apex S 121210	CRYSTA-Apex S 122010	CRYSTA-Apex S 123010
Range	X axis	35.43" (900mm)			47.24" (1200mm)		
	Y axis	39.36" (1000mm)	62.99" (1600mm)	78.73" (2000mm)	47.24" (1200mm	78.73" (2000mm)	118.1" (3000mm)
	Z axis	31.49" (800mm)			39.36" (1000mm)		
Resolution		0.000004" (0.0001mm)					
Guide Method		Air bearing on each axis					
Maximum Drive Speed 3D		20.43"/s (519mm/s)			27.28"/s (693mm/s)		
Maximum Acceleration 3D		0.17G (1732mm/s²)					
Work table	Material	Granite					
	Size	42.51 x 67.71" (1080 x 1720mm)	42.51 x 91.33" (1080 x 2320mm)	42.51 x 107.08" (1080 x 2720mm)	55.90 x 67.71" (1420 x 2165mm)	55.90 x 116.73" (1420 x 2965mm)	55.90 x 156.10" (1420 x 3965mm)
	Tapped insert	M8 x 1.25mm					
Workpiece	Max. height	39.36" (1000mm)			47.24" (1200mm)		
	Max. load	2,645 lbs. (1200kg)	3,306 lbs. (1500kg)	3,968 lbs. (1800kg)	4,409 lbs. (2000kg)	5,511 lbs. (2500kg)	6,613 lbs. (3000kg)
Mass (incl. stand & controller)		4,985 lbs. (2261kg)	6,389 lbs. (2898kg)	8,691 lbs. (3942kg)	8,928 lbs. (4050kg)	13,558 lbs. (6150kg)	20,084 lbs. (9110kg)
Dimensions W x D x H		65.74x76.77x123.22" (1670x1950x3130mm)	65.74x105.90x123.22" (1670x2690x3130mm)	65.74x121.65x123.22" (1670x3170x3130mm)	86.61x100.19x143.50" (2200x2545x3645mm)	86.61x131.69x143.50" (2200x3345x3645mm)	86.61x171.06x143.50" (2200x4345x3645mm)
ISO-10360-2:2009 $E_{0,MPE}$							
18-22°C (64.4-71.6°F)	TP200:	(1.9+3L/1000)µm			(2.5+3L/1000)µm		
	MPP310/SP25/SP80:	(1.7+3L/1000)µm			(2.3+3L/1000)µm		
16-26°C (60.8-78.8°F)	TP200:	(1.9+4L/1000)µm			(2.5+4L/1000)µm		
	MPP310/SP25/SP80:	(1.7+4L/1000)µm			(2.3+4L/1000)µm		
ISO-10360-2:2009 $E_{150,MPE}$ †							
18-22°C (64.4-71.6°F)	TP200:	(2.4+3L/1000)µm			(3.0+3L/1000)µm		
	MPP310/SP25/SP80:	(1.7+3L/1000)µm			(2.3+3L/1000)µm		
16-26°C | (60.8-78.8°F)	TP200:	(2.4+4L/1000)µm			(3.0+4L/1000)µm		
	MPP310/SP25/SP80:	(1.7+4L/1000)µm			(2.3+4L/1000)µm		
ISO-10360-2:2009 $R_{0,MPL}$ †							
	TP200:	1.9µm			2.0µm		
	MPP310/SP25/SP80:	1.3µm			1.9µm		
ISO-10360-4 MPE_{THP}/MPT_{THP} †							
	SP25:	2.3µm/60sec			2.8µm/50sec		
	SP80:	2.3µm/60sec			2.5µm/50sec		
	MPP310:	1.8µm/80sec			2.3µm/80sec		
ISO-10360-5: 2010 $P_{FTU,MPE}$							
	TP200:	1.9µm			2.2µm		
	MPP310/SP25/SP80:	1.7µm			2.0µm		

Stylus Configurations for ISO Tests	
TP200:	Ø4mm x L10mm
SP25/SP80:	Ø4mm x L50mm
MPP310Q:	Ø4mm x L18mm

Air Supply	900	1200
Pressure	58.0 PSI (0.4MPa)	
Consumption	2.11CFM (60L/min)	3.53CFM (100L/min)
Source	4.23CFM (120L/min)	5.29CFM (150L/min)

Environment	18-22°C (64.4-71.6°F)	16-26°C (60.8-78.8°F)
Rate of change	2.0C° or less per hour 2.0C° or less per day	2.0C° or less per hour 5.0C° or less per day
Gradient	1.0C° or less per meter vertical & horizontal	

† This test is not part of Mitutoyo America's standard A2LA accredited CMM calibration procedure and is quoted upon request.

See page L-2 for explanation of ISO accuracy statements

Mitutoyo

CRYSTA-Apex EX 500T/700T/900T

SERIES 191 — PH20 Equipped 5-Axis CNC CMM

The CRYSTA-Apex EX 500T/700T/900T series are CNC CMMs equipped with the PH20 5-axis control touch-trigger probe. The 5-axis operation reduces the time required for probe rotational movements and allows more flexible positioning. This also ensures easy access to complex workpieces and saves time both during programming and measurement.
In addition to 3-axis point measurement similar to conventional coordinate measuring machines, the PH20 probe head also supports head-touch operation for quick point measurement using the two rotational axes of the probe only, with no movement required along the CMM axes.
The PH20 incorporates a TP20 probe and allows use of modules designed for the TP20. Automatic probe changes with a module changer is also supported with the use of the TCR20 change rack (option).



FEATURES

- Incorporates PH20 5-axis touch-trigger probe
- Ultra-high speed 5-axis control touch-trigger probe
- Smooth 5-axis control drastically reduces measurement time (typically 40-65%) for probe rotation
- 5-axis design provides highly efficient measurement method of head touch for point measurement by moving the probe head only in two axes







CRYSTA-Apex EX 544T

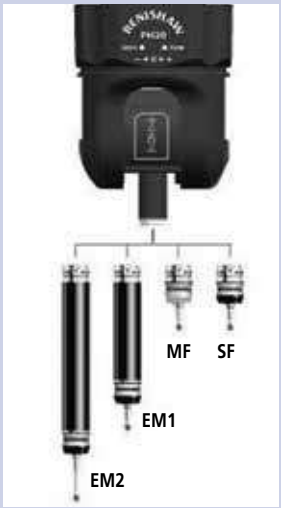

Specifications PH20

Rotation angle (Pitch angle)	Vertical (A-axis)	-115° to +115° (0.08sec)
	Horizontal (B-axis)	∞ (0.08sec)
Stylus	Maximum length	50mm

SPECIFICATIONS

Type: BRIDGE	Model No.	CRYSTA-Apex EX 544T	CRYSTA-Apex EX 574T	CRYSTA-Apex EX 776T	CRYSTA-Apex EX 7106T	CRYSTA-Apex EX 9106T	CRYSTA-Apex EX 9166T	CRYSTA-Apex EX 9206T
Range	X axis	19.68" (500mm)		27.55" (700mm)		35.43" (900mm)		
	Y axis	15.74" (400mm)	27.55" (700mm)		39.36" (1000mm)		62.99" (1600mm)	78.73" (2000mm)
	Z axis	15.74" (400mm)		23.62" (600mm)				
Resolution		0.000004" (0.0001mm)						
Guide Method		Air bearing on each axis						
Work table	Material	Granite						
	Size	25.11 x 33.86" (638 x 860mm)	25.11 x 45.67" (638 x 1160mm)	34.64 x 55.90" (880 x 1420mm)	34.64 x 67.71" (880 x 1720mm)	42.51 x 67.71" (1080 x 1720mm)	42.51 x 91.33" (1080 x 2320mm)	42.51 x 107.0" (1080 x 2720mm)
	Tapped insert	M8 x 1.25mm						
Workpiece	Max. height	21.45" (545mm)		31.49" (800mm)				
	Max. load	396 lbs. (180kg)		1,763 lbs. (800kg)	2,204 lbs (1000kg)	2,645 lbs. (1200kg)	3,306 lbs. (1500kg)	3,968 lbs. (1800kg)
Mass (incl. stand & controller)		1,181 lbs. (536kg)	1,424 lbs. (646kg)	3,739 lbs. (1696kg)	4,347 lbs. (1972kg)	4,964 lbs. (2252kg)	6,369 lbs. (2889kg)	8,670 lbs. (3933kg)
Dimensions W x D x H		42.60x44.17x86.02" (1082x1122x2185mm)	42.60x57.40x86.02" (1082x1458x2185mm)	57.87x64.96x107.48" (1470x1650x2730mm)	57.87x76.77x107.48" (1470x1950x2730mm)	65.74x76.77x107.48" (1670x1950x2730mm)	65.74x105.90x107.48" (1670x2690x2730mm)	65.74x121.65x107.48" (1670x3090x2730mm)
ISO-10360-2:2009 $E_{0,MPE}$								
18-22°C (64.4-71.6°F)		(2.2+3L/1000)µm						
16-26°C (60.8-78.8°F)		(2.2+4L/1000)µm						
ISO-10360-2:2009† $R_{0,MPL}$		1.8µm		2.2µm				
ISO-10360-5: 2010 $P_{FTU,MPE}$		2.2µm						

Stylus Configurations for ISO Tests	
TP20:	Ø4mm x L12mm

Air Supply	500	700/900
Pressure	58.0 PSI (0.4MPa)	
Consumption	1.76CFM (50L/min)	2.11CFM (60L/min)
Source	3.53CFM (100L/min)	4.23CFM (120L/min)

Environment	18-22°C (64.4-71.6°F)	16-26°C (60.8-78.8°F)
Rate of change	2.0C° or less per hour 2.0C° or less per day	2.0C° or less per hour 5.0C° or less per day
Gradient	1.0C° or less per meter vertical & horizontal	

† This test is not part of Mitutoyo America's standard A2LA-accredited CMM calibration procedure and is quoted upon request.

See page L-2 for explanation of ISO accuracy statements.

CRYSTA-Apex EX 1200R

SERIES 191 — REVO-Equipped 5-Axis CNC CMM

The CRYSTA-Apex EX 1200R series is advanced CNC CMMs equipped with the REVO 5-axis scanning probe head. The 5-axis operation reduces the time required for probe repositioning movements and allows for more flexible positioning. This also facilitates access to complex workpieces and saves time both during programming and measurement.
The ultra-high speed 5-axis scanning (max. 500mm/s) surpasses conventional 3-axis control, supporting high-speed sampling of up to 4,000 points per second and allowing data acquisition of densely spaced measurement points, even during high-speed scanning.
The internal implementation of laser sensing technology ensures high-accuracy measurement, even with long styli (up to 500 mm as measured from probe rotation center to stylus tip). Two types of scanning probes are supported:

- RSP2 for 5-axis scanning
- RSP3 probe (SP25M type), allowing the use of a cranked stylus

Automatic changeover of these probes with an auto probe changer is possible, enabling fully automated measurement of parts with diverse shapes. Probe calibration of RSP2 requires only about 20 minutes to enable use of the full angular range. Compared to conventional scanning probes, this reduces preparation time.

FEATURES

- Equipped with REVO 5-axis scanning probe head
- Ultra-high speed 5-axis scanning





SPECIFICATIONS

Type: BRIDGE	Model No.	Crysta-Apex EX 121210R	Crysta-Apex EX 122010R	Crysta-Apex EX 123010R
Range	X axis		47.24″ (1200mm)	
	Y axis	47.24″ (1200mm)	78.73″ (2000mm)	118.10″ (3000mm)
	Z axis		39.36″ (1000mm)	
Resolution			0.000004″ (0.0001mm)	
Guide Method			Air bearing on each axis	
Work table	Material		Granite	
	Size	55.90″ x 85.23″ (1420mm x 2165mm)	55.90″ x 116.73″ (1420mm x 2965mm)	55.90″ x 156.10″ (1420mm x 3965mm)
	Tapped insert		M8 x 1.25mm	
Workpiece	Max. height		45.66″ (1160mm)	
	Max. load	4,409 lbs. (2000kg)	5,511 lbs. (2500kg)	6,613 lbs. (3000kg)
Mass (incl. stand & controller)		8,928 lbs. (4050kg)	13,558 lbs. (6150kg)	20,084 lbs. (9110kg)
Dimensions W x D x H		86.61 x 100.19 x 143.50″ (2200 x 2545 x 3645mm)	86.61 x 131.69 x 143.50″ (2200 x 3345 x 3645mm)	86.61 x 171.06 x 143.50″ (2200 x 4345 x 3645mm)
ISO-10360-2:2009 $E_{0,MPE}$				
18-22°C (64.4-71.6°F)			(2.9+4L/1000)µm	
16-26°C (60.8-78.8°F)			(2.9+5L/1000)µm	
ISO-10360-5: 2010 $P_{FTU,MPE}$			3.2µm	

Configuration for ISO Tests	
RSP2+RSH250	Ø6mm x L10mm

Air Supply	
Pressure	72.5 PSI (0.5MPa)
Consumption	5.29CFM (150L/min)
Source	8.12CFM (230L/min)

Environment	18-22°C (64.4-71.6°F)	16-26°C (60.8-78.8°F)
Rate of change	1.0C° or less per hour 2.0C° or less per day	1.0C° or less per hour 5.0C° or less per day
Gradient	1.0C° or less per meter vertical & horizontal	

Specification of REVO Scanning Probe

Rotation angle (Pitch angle)	Vertical (A-axis)	-5° to +120° (0.08 sec)
	Horizontal (B-axis)	∞ (0.08sec)
Stylus	Maximum length	50mm (Distance from probe rotation center to stylus tip)

See page L-2 for explanation of ISO accuracy statements.

Mitutoyo

CRYSTA-Apex S1600/2000

SERIES 191 — Standard CNC CMM

Crysta-Apex S1600/2000 series are large-sized CNC CMMs developed for supporting quality evaluation of large parts. The scale systems on Mitutoyo high-precision models utilize a high-performance linear encoder (manufactured by Mitutoyo) for detecting axis position. In addition, various technologies have been utilized in the structure, part processing and assembly to provide high-accuracy measurement.

Floor vibration at the installation location can be a source of variations in measured values. The auto-leveling air spring vibration isolators is available as an option for Crysta-Apex S1600/2000 series. The vibration isolators insulates the main unit from floor vibrations and can quickly level the CMM main unit using a sensor that detects load fluctuations caused by axis movement of the CMM or workpiece loading. Build to order.

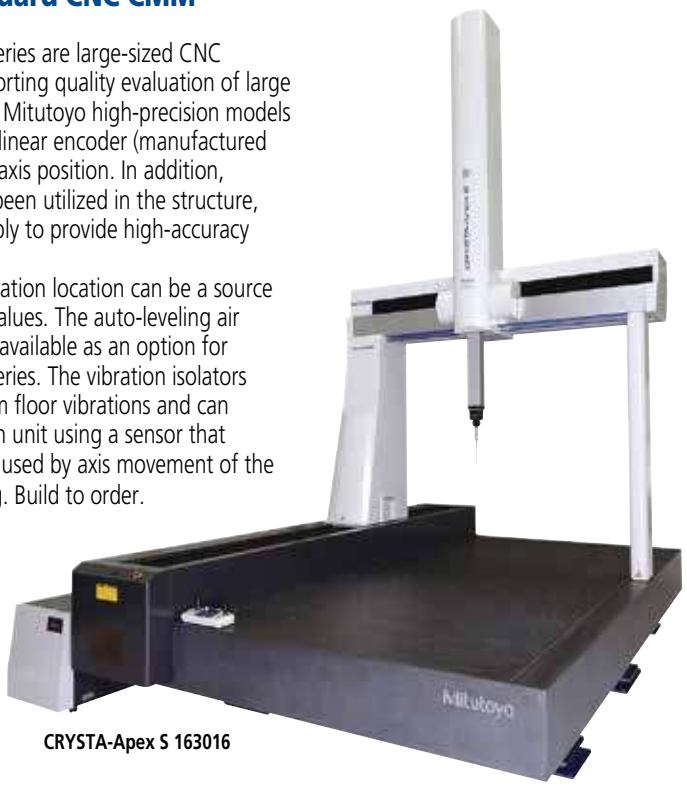

CRYSTA-Apex S 163016



SP80 Probe
(Extended reach scanning)
See page L-21

Supported Probe Systems			
Type	**Probe**	**AS1600**	**AS2000**
TOUCH-TRIGGER PROBES	MH20i	●	●
	TP20	●	●
	TP200	●	●
	TP7	●	●
SCANNING PROBES	SP25	●	●
	MPP	●	●
	SP80	●	●
LASER PROBES	SM606	●	●
	SM606T	●	●
	SM610	●	●
	SM1010	●	●
SURFACE FINISH	SurfTest	●	▲
OPTICAL	QVP	●	●
	CF20	●	●

● Supported ▲ Not Recommended

See page L-20 thru L-27 for probe system information.

SPECIFICATIONS

Type: BRIDGE	Model No.	CRYSTA-Apex S162012 [CRYSTA-Apex S162016]	CRYSTA-Apex S163012 [CRYSTA-Apex S163016]	CRYSTA-Apex S164012 [CRYSTA-Apex S164016]	CRYSTA-Apex S203016	CRYSTA-Apex S204016
Range	X axis	62.99" (1600mm)			78.73" (2000mm)	
	Y axis	78.73" (2000mm)	118.10" (3000mm)	157.47" (4000mm)	118.10" (3000mm)	157.47" (4000mm)
	Z axis	47.24" (1200mm) [62.99" (1600mm)]			62.99" (1600mm)	
Resolution		0.000004" (0.0001mm)				
Guide Method		Air bearing on each axis				
Maximum Drive Speed 3D		27.28"/s (693mm/s)				
Maximum Acceleration 3D		0.14G (1,390mm/s^2)				
Work table	Material	Granite				
	Size	70.86" x 126.18" (1800mm x 3205mm)	70.86" x 165.55" (1800mm x 4205mm)	70.86" x 204.92" (1800mm x 5205mm)	86.61" x 165.55" (2200mm x 4205mm)	86.61" x 204.92" (2200mm x 5205mm)
	Tapped insert	M8 x 1.25mm				
Workpiece	Max. height	55.11" (1400mm) [70.86" (1800mm)]			70.86" (1800mm)	
	Max. load	6,613 lbs. (3000kg)	7,716 lbs. (3500kg)	9,920 lbs. (4500kg)	8,818 lbs. (4000kg)	11,023 lbs. (5000kg)
Mass (incl. stand & controller)		20,502 lbs. (9300kg) [20,613 lbs. (9350kg)]	23,368 lbs. (10600kg) [23,479 lbs. (10650kg)]	32,628 lbs. (14800kg) [37,738 lbs. (14850kg)]	31,085 lbs. (14100kg)	42,769 lbs. (19400kg)
Dimensions W x D x H		106.29 x 141.73 x 162.99" (2700 x 3600 x 4140mm) [106.29 x 141.73 x 194.48"] [(2700 x 3600 x 4940mm)]	106.29 x 181.10 x 162.99" (2700 x 4600 x 4140mm) [106.29 x 181.10 x 194.48"] [(2700 x 4600 x 4940mm)]	106.29 x 220.47 x 164.96" (2700 x 5600 x 4190mm) [106.29 x 220.47 x 196.45"] [(2700 x 5600 x 4990mm)]	122.04 x 181.10 x 196.45" (3100 x 4600 x 4990mm)	122.04 x 220.47 x 198.42" (3100 x 5600 x 5040mm)
ISO-10360-2:2009 $E_{0,MPE}$						
18-22°C (64.4-71.6°F)	TP200:	(6+4.5L/1000)µm [(7+5.5L/1000)µm]			(9+8L/1000)µm	
	MPP310/SP25:	(3.3+4.5L/1000)µm [(4.5+5.5L/1000)µm]			(4.5+8L/1000)µm	
16-24°C (60.8-75.2°F)	TP200:	(6+5.5L/1000)µm [(7+6.5L/1000)µm]			(9+9L/1000)µm	
	MPP310/SP25:	(3.3+5.5L/1000)µm [(4.5+6.5L/1000)µm]			(4.5+9L/1000)µm	
ISO-10360-4 MPE_{THP}/MPT_{THP} †						
	MPP310/SP25:	5µm/60sec			6µm/60sec	
ISO-10360-5: 2010 $P_{FTU,MPE}$						
	TP200:	6.5µm [7.5 µm]			9.5µm	
	MPP310/SP25:	5µm [6µm]			6µm	

Stylus Configurations for ISO Tests	
TP200:	Ø4mm x L10mm
SP25/SP80:	Ø4mm x L50mm
MPP310Q:	Ø4mm x L18mm

Air Supply	
Pressure	58.0 PSI (0.4MPa)
Consumption	5.29CFM (150L/min)
Source	7.06CFM (200L/min)

Environment	18-22°C (64.4-71.6°F)	16-24°C (60.8-75.2°F)
Rate of change	1.0C° or less per hour 2.0C° or less per day	1.0C° or less per hour 5.0C° or less per day
Gradient	1.0C° or less per meter vertical & horizontal	

† This test is not part of Mitutoyo America's standard A2LA-accredited CMM calibration procedure and is quoted upon request.

See page L-2 for explanation of ISO accuracy statements.

Supported Probe Systems			
Type	Probe	STRATO Apex 500	STRATO Apex 700/900
TOUCH-TRIGGER PROBES	MH20i	●	●
	TP20	●	●
	TP200	●	●
	TP7	●	●
SCANNING PROBES	SP25	●	●
	MPP	●	●
	SP80	▲	●
LASER PROBES	SM606	▲	●
	SM606T	▲	●
	SM610	▲	●
	SM1010	▲	●
SURFACE FINISH	SurfTest	—	●
OPTICAL	QVP	▲	●
	CF20	●	●

● Supported ▲ Not Recommended — Not supported

See page L-20 thru L-27 for probe system information.



Ultra-high precision glass scales



Internal heat generation minimized

STRATO-Apex 500/700/900

SERIES 355 — High-Accuracy CNC CMM

The STRATO-Apex series is high-accuracy CNC CMMs achieving 0.9µm for the first term. The series guarantees high accuracy and also high-moving speed and acceleration achieved with improved rigid air bearings on all axial guideways. The scale systems on Mitutoyo high-precision models utilize a high-performance linear encoder (manufactured by Mitutoyo), for detecting axis position. In addition, various technologies have been utilized in the structure, part processing and assembly to provide high-accuracy measurement.



TP7 Probe
(High-precision touch trigger)
See page L-20



STRATO-Apex 574



STRATO-Apex 776



STRATO-Apex 9106

SPECIFICATIONS

Type: BRIDGE	Model No.	STRATO-Apex 574	STRATO-Apex 776	STRATO-Apex 7106	STRATO-Apex 9106	STRATO-Apex 9166
Range	X axis	19.68" (500mm)	27.55" (700mm)		35.43" (900mm)	
	Y axis	27.55" (700mm)		39.36" (1000mm)		62.99" (1600mm)
	Z axis	15.74" (400mm)	23.62" (600mm)			
Resolution		0.0000019" (0.00005mm)	0.00000078" (0.00002mm)			
Guide Method		Air bearing on each axis				
Maximum Drive Speed 3D		20.43"/s (519mm/s)				
Maximum Acceleration 3D		0.17G (2,309mm/s^2)	0.26G (2,598mm/s^2)			
Work table	Material	Granite				
	Size	26.61 x 55.90" (676 x 1420mm)	33.93 x 55.90" (862 x 1420mm)	33.93 x 67.71" (862 x 1720mm)	41.81 x 67.71" (1062 x 1720mm)	41.81 x 91.33" (1062 x 2320mm)
	Tapped insert	M8 x 1.25mm				
Workpiece	Max. height	22.04" (560mm)	30.31" (770mm)			
	Max. load	396 lbs. (180kg)	1,102 lbs. (500kg)	1,763 lbs. (800kg)	1,763 lbs. (800kg)	2,645 lbs. (1200kg)
Mass (incl. stand & controller)		3,373 lbs. (1530kg)	4,177 lbs. (1895kg)	4,806 lbs. (2180kg)	5,313 lbs. (2410kg)	6,801 lbs. (3085kg)
Dimensions W x D x H		49.99x64.96x94.88" (1270x1650x2410mm)	57.48x73.22x111.41" (1460x1860x2830mm)	57.48x85.03x111.41" (1460x2160x2830mm)	65.35x85.03x111.41" (1660x2160x2830mm)	65.35x108.66x111.41" (1660x2760x2830mm)
ISO-10360-2:2009 $E_{0,MPE}$						
	TP200:	(1.4+2.5L/1000)µm*	(1.4+2.5L/1000)µm**		(1.5+2.5L/1000)µm**	
	SP25:	(0.7+2.5L/1000)µm*	(0.9+2.5L/1000)µm**			
ISO-10360-2:2009 $E_{150,MPE}$						
	TP200:	(1.9+2.5L/1000)µm*	(1.9+2.5L/1000)µm**		(2.0+2.5L/1000)µm**	
	SP25:	(0.7+2.5L/1000)µm*	(0.9+2.5L/1000)µm**			
ISO-10360-2:2009 $R_{0,MPL}$	TP200:	1.2µm*	1.2µm**			
	SP25:	0.7µm*	0.8 µm**			
ISO-10360-4 MPE_{THP}/MPT_{THP}	SP25:	1.3µm/40sec*	1.8µm/45sec**			
ISO-10360-5: 2010 $P_{FTU,MPE}$	TP200:	1.8µm*	1.8µm**			
	SP25:	0.7µm*	0.9 µm**			

* 18-22°C (64.4-71.6°F - Strato Apex 574
** 19-21°C (66.2-69.8°F) - Strato Apex 776/7106/9106/9166

Stylus Configurations for ISO Tests	
TP200:	Ø4mm x L10mm
SP25/SP80:	Ø4mm x L50mm

Air Supply	
Pressure	58.0 PSI (0.4MPa)
Consumption	2.11CFM (60L/min)
Source	4.23CFM (120L/min)

Environment	18-22°C (64.4-71.6°F)	19-21°C (66.2-69.8°F)
Rate of change	1.0C° or less per hour 2.0C° or less per day	
Gradient	1.0C° or less per meter vertical & horizontal	

See page L-2 for explanation of ISO accuracy statements.

Mitutoyo

STRATO-Apex 1600

SERIES 355 — High-Accuracy CNC CMM

The STRATO-Apex 1600 series is a large-sized CNC CMM developed for supporting quality evaluation and assembly of large parts.The scale systems on Mitutoyo high-precision models utilize a high-performance linear encoder (manufactured by Mitutoyo) for detecting axis position. In addition, various technologies have been utilized in the structure, part processing and assembly to provide high-accuracy measurement. Floor vibration at the installation location can be a source of variation in measured values. The auto-leveling air spring vibration isolator is available as an option for STRATO-Apex 1600 series. The vibration isolator insulates the main unit from floor vibrations and can quickly level the CMM main unit using a sensor that detects load fluctuations caused by axis movement of the CMM or workpiece loading. All STRATO-Apex high-precision series CMMs are equipped with temperature compensation and therefore do not require a temperature-controlled room. Accuracy is guaranteed within the range of 16 to 26°C.



STRATO-Apex 1600

Supported Probe Systems		
Type	**Probe**	**STRATO Apex 1600**
TOUCH TRIGGER PROBES	MH20i	●
	TP20	●
	TP200	●
	TP7	●
SCANNING PROBES	SP25	●
	MPP	●
	SP80	●
LASER PROBES	SM606	●
	SM606T	●
	SM610	●
	SM1010	●
SURFACE FINISH	SurfTest	●

● Supported ▲ Not Recommended

See page L-20 thru L-27 for probe system information



SP80 Probe
(Extended reach scanning)
See page L-21

SPECIFICATIONS

Type: BRIDGE	Model	STRATO-Apex 162012	STRATO-Apex 162016	STRATO-Apex 163012	STRATO-Apex 163016
Range	X axis	62.99″ (1600mm)			
	Y axis	78.73″ (2000mm)		118.10″ (3000mm)	
	Z axis	47.24″ (1200mm)	62.99″ (1600mm)	47.24″ (1200mm)	62.99″ (1600mm)
Resolution		0.0000019″ (0.00005mm)			
Guide Method		Air bearing on each axis			
Maximum Drive Speed 3D		23.85″/s (606mm/s)			
Maximum Acceleration 3D		0.13G (1,350mm/s^2)			
Work table	Material	Granite			
	Size	72.83 x 129.13″ (1850mm x 3280mm)		72.83 x 168.50″ (1850mm x 4280mm)	
	Tapped insert	M8 x 1.25mm			
Workpiece	Max. height	53.14″ (1350mm)	368.89″ (1750mm)	53.14″(1350mm)	68.89″ (1750mm)
	Max. load	7,716 lbs. (3500kg)		8,818 lbs. (4000kg)	
Mass (incl. stand & controller)		24,582 lbs. (11150kg)	24,692 lbs. (11200kg)	33,730 lbs. (15300kg)	33,841 lbs. (15350kg)
Dimensions W x D x H		110.43x145.07x170.86″ (2805x3685x4340mm)	110.43x145.07x202.36″ (2805x3685x5140mm)	110.43x184.44x172.83″ (2805x4685x4390mm)	110.43x184.44x204.33″ (2805x4685x5190mm)
ISO-10360-2:2009 $E_{0,MPE}$ 18-22°C (64.4-71.6°F)					
	TP200:	(3.5+4L/1000)µm	(4.0+4L/1000)µm	(3.5+4L/1000)µm	(4.0+4L/1000)µm
	SP25/SP80:	(2.5+4L/1000)µm	(3.0+4L/1000)µm	(2.5+4L/1000)µm	(3.0+4L/1000)µm
ISO-10360-2:2009 $E_{150,MPE}$ † 18-22°C (64.4-71.6°F)					
	TP200:	(3.5+4L/1000)µm	(4.0+4L/1000)µm	(3.5+4L/1000)µm	(4.0+4L/1000)µm
	SP25/SP80:	(2.5+4L/1000)µm	(3.0+4L/1000)µm	(2.5+4L/1000)µm	(3.0+4L/1000)µm
ISO-10360-2:2009 $R_{0,MPL}$ †					
	TP200:	3.5µm	4.0µm	3.5µm	4.0µm
	SP25:	2.5µm			
ISO-10360-4 MPE_{THP}/MPT_{THP} †					
	SP25/SP80:	2.5µm/60sec	3.0µm/60sec	2.5µm/60sec	3.0µm/60sec
ISO-10360-5: 2010 $P_{FTU,MPE}$	TP200:	3.5µm	4.0µm	3.5µm	4.0µm
	SP25/SP80:	2.3µm	2.8µm	2.3µm	2.8µm

Stylus Configurations for ISO Tests	
TP200:	Ø4mm x L10mm
SP25/SP80:	Ø4mm x L50mm

Air Supply	
Pressure	58.0 PSI (0.4MPa)
Consumption	3.53CFM (100L/min)
Source	8.82CFM (250L/min)

Environment	18-22°C (64.4-71.6°F)
Rate of change	1.0C° or less per hour 2.0C° or less per day
Gradient	1.0C° or less per meter vertical & horizontal

† This test is not part of Mitutoyo America's standard A2LA-accredited CMM calibration procedure and is quoted upon request.

See page L-2 for explanation of ISO accuracy statements.

NEW-STYLE
Vision Measuring Systems

FALCIO Apex 2000/3000

SERIES 355 — High-Accuracy Large CNC CMM

The FALCIO-Apex 2000/3000 series CNC CMMs use Mitutoyo's standard structure for large machines, which are designed for measuring large and heavy workpieces with high accuracy. The measuring accuracy and drive speed are the highest level in the X-axis measuring range of 2000mm and 3000mm for CNC CMMs worldwide. Units are equipped with a system (MOVAC) to automatically restore accuracy deterioration caused by foundation deformation as a standard feature. Safety devices such as Z-axis beam sensor, tape switch and area sensor are available as options. Built to order.



SurfaceMeasure Probes
(Laser scanning probes—non-contact)
See page L-22



FALCIO Apex 305015G

SPECIFICATIONS

Type: SEPARATE GUIDE	Model No.	FALCIO-Apex 203015	FALCIO-Apex 204015	FALCIO-Apex 205015	FALCIO-Apex 305015
Range	X axis	78.73" (2000mm)			118.10" (3000mm)
	Y axis	118.10" (3000mm)	157.47" (4000mm)	196.84" (5000mm)	
	Z axis	59.05" (1500mm)			
Resolution		0.0000039" (0.0001mm)			
Mass (incl. stand & controller)		26,455 lbs. (12000kg)	30,864 lbs. (14000kg)	33,069 lbs. (15000kg)	35,273 lbs. (16000kg)
Dimensions W x D x H		167.32x190.94x184.64" (4250x4850x4690mm)	167.32x230.31x184.64" (4250x5850x4690mm)	167.32x269.68x184.64" (4250x6850x4690mm)	213.77x312.99x184.64" (5430x7950x4690mm)
ISO-10360-2:2009 $E_{0,MPE}$					
18-22°C (64.4-71.6°F)	TP200:	3.5+4L/1000µm			

Supported Probe Systems		
Type	Probe	FALCIO Apex
TOUCH-TRIGGER PROBES	MH20i	●
	TP20	●
	TP200	●
	TP7	●
SCANNING PROBES	SP25	●
	MPP	▲
	SP80	●
LASER PROBES	SM606	●
	SM606T	●
	SM610	●
	SM1010	●
SURFACE FINISH	SurfTest	●

● Supported ▲ Not Recommended

See page L-20 thru L-27 for probe system information.

Stylus Configurations for ISO Tests	
TP200:	Ø4mm x L10mm

See page L-2 for explanation of ISO accuracy statements.

Main Unit Startup System

This machine incorporates a startup system (relocation detection system), which disables operation when an unexpected vibration is applied or the machine is relocated. Be sure to contact your nearest Mitutoyo prior to relocating this machine after initial installation. Refer to page VIII for details.



TP200 Probe
(Touch trigger)
See page L-20

Mitutoyo

LEGEX 500/700/900/1200

SERIES 356 — Ultra-high Accuracy CNC CMM

Achieving premium performance, the LEGEX series with its fixed bridge structure and precision air bearings resting on rigid guideways ensures superior stability of motion and ultra-high measuring accuracy. Thorough testing, using FEM structure analysis simulation, guarantees geometric motion accuracy has minimal errors from fluctuations in the load and other variables. LEGEX series CNC CMMs are suitable for complex small- to medium-size workpieces, such as gears, bearings, lens, precision dies or other high-precision workpieces requiring dimensional accuracies with small tolerances.

The LEGEX series incorporates an ultra-high accuracy scale unit with crystallized glass scales (thermal expansion coefficient of 0.01×10^{-6}/K), and a high-resolution, high-performance reflection linear encoder providing premium positioning performance. All LEGEX Ultra-accuracy series CMM's are equipped with temperature compensation and therefore do not require a temperature controlled room. Accuracy is guaranteed within the range of 18 to 22°C.



MPP-310Q

Mitutoyo's MPP-310Q probe can be used for point-to-point measuring and continuous scanning applications. If the workpiece requires the maximum accuracy, the MPP-310Q offers zero-point data acquisition for statistical measurement. In this mode the MPP-310Q obtains the measurement data after all the CMM slides have come to a complete standstill. This statistical measurement is intended to eliminate dynamic effects on measurement. *See page L-21 for MPP-310Q system information.*

MPP-310Q Specs

- Resolution: 0.01µm
- Measuring Force: 0.20N/mm
- Maximum Stylus Length: 200mm
- Maximum Stylus Weight: 75g



LEGEX 574



LEGEX 776



LEGEX 9106

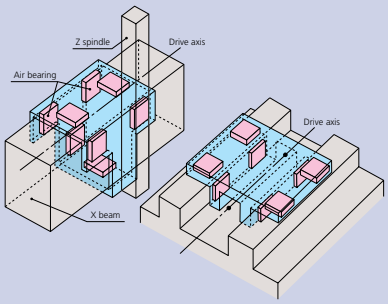

XY axis independence and center-of-gravity drive system. The fixed-bridge design of the LEGEX allows the axes to operate independently. Movement of the X-axis slide does not change the loading on the Y-axis slide and therefore does not cause deformation. In addition, the center-of-gravity drive system places the drive units near the center of gravity of each slide, allowing high speed and highly accurate measurements by reducing inertia-induced deflections during acceleration and deceleration.

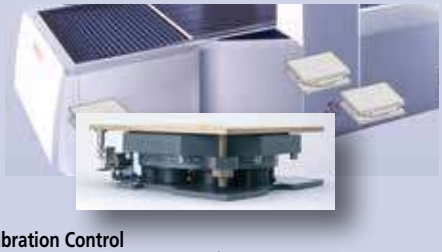

Vibration Control
The LEGEX is hardened against floor-induced vibration by use of air-damped spring isolators with an auto-leveling function, virtually eliminating factory-floor vibrations from the entire machine structure.

Ceramic-coated worktable
Standard feature for corrosion resistance and long life.



SPECIFICATIONS

Type: FIXED BRIDGE	Model No.	LEGEX 574	LEGEX 774	LEGEX 776	LEGEX 9106
Range	X axis	19.68" (500mm)	27.55" (700mm)		35.43" (900mm)
	Y axis	27.55" (700mm)			39.36" (1000mm)
	Z axis	15.74" (400mm)		23.62" (600mm)	
Resolution		0.00000039" (0.01µm)			
Guide Method		Air bearing on each axis			
Maximum Drive Speed 3D		7.8"/s (200mm/s)			
Maximum Acceleration 3D		0.1G (980mm/s²)			
Work table	Material	Cast Iron with Ceramic Coating			
	Size	21.65" x 29.52" (550mm x 750mm)	29.52" x 29.52" (750mm x 750mm)		37.40" x 41.33" (950mm x 1050mm)
	Tapped insert	M8 x 1.25mm			
Workpiece	Max. height	27.59" (701mm)		33.50" (851mm)	
	Max. load	551 lbs. (250kg)	1,102 lbs. (500kg)		1,763 lbs. (800kg)
Mass (incl. stand & controller)		7,716 lbs. (3500kg)	11,023 lbs. (5000kg)	11,243 lbs. (5100kg)	14,330 lbs. (6500kg)
Dimensions W x D x H		62.44 x 94.48 x 103.54" (1470 x 2400 x 2630mm)	65.74 x 94.48 x 103.54" (1670 x 2400 x 2630mm)	65.74 x 94.48 x 115.35" (1670 x 2400 x 2930mm)	73.62 x 119.29 x 120.07" (1870 x 3030 x 3050mm)
ISO-10360-2:2009 $E_{0,MPE}$		19-21°C (66.2-69.8°F)		*18-22°C (64.4-71.6°F)*	
19-21°C (66.2-69.8°F)	MPP310Q:	(0.28+L/1000)µm		*(0.30+L/1000)µm*	
	SP25M:	(0.38+L/1000)µm		*(0.40+L/1000)µm*	
ISO-10360-4 MPE_{THP}/MPT_{THP} †					
	MPP310Q/SP25M:	1.1µm/60sec			
ISO-10360-5: 2010 $P_{FTU,MPE}$	MPP310Q:	0.40µm			
	SP25M:	0.45µm			

Stylus Configurations for ISO Tests	
MPP310Q:	Ø4mm x L18mm
SP25M:	Ø4mm x L50mm

Air Supply	500/700/1200	900
Pressure	58.0 PSI (0.5MPa)	72.5 PSI (0.4MPa)
Consumption	4.23CFM (120L/min)	
Source	5.65CFM (160L/min)	

Environment	19-21°C (66.2-69.8°F) / 18-22°C (64.4-71.6°F)
Rate of change	0.5C° or less per hour 1.0C° or less per day
Gradient	1.0C° or less per meter vertical & horizontal

† This test is not part of Mitutoyo America's standard A2LA-accredited CMM calibration procedure and is quoted upon request.

See page L-2 for explanation of ISO accuracy statements.

MACH-V9106

SERIES 360 — Inline CNC CMM

The MACH-3A and MACH-V maximize machining operations by performing in-line or near-line high-speed coordinate measuring in conjunction with your CNC machine tools. These high-throughput machines can be incorporated right into the manufacturing line and can provide pre/post machining feedback to your machine tool for machining adjustments.



MACH-V9106

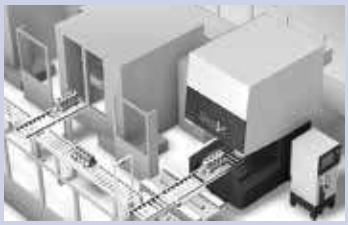

SPECIFICATIONS

Type: INLINE		Model No.	MACH V9106
Range		X axis	35.43" (900mm)
		Y axis	39.36" (1000mm)
		Z axis	23.62" (600mm)
Resolution			0.0000039" (0.0001mm)
Guide Method			Mechanical bearing on each axis
Maximum Drive Speed 3D			34.09"/s (866mm/s)
Maximum Acceleration 3D			0.88g (8660mm/s²)
Work table		Material	Steel
		Size	35.62" x 41.96" (905mm x 1066mm)
		Tapped insert	M8 x 1.25mm
Workpiece		Max. height	31.49" (800mm)
		Max. load	330 lbs. (150kg)
Mass (including controller)			9,105 lbs. (4130kg)
Dimensions W x D x H			58.14 x 115.82 x 114.17" (1477 x 2942 x 2900mm)
ISO-10360-2:2009 $E_{0,MPE}$			
	TP7/SP25:	19-21°C (66.2-69.8°F)	(2.5+3.5L/1000)µm
		18-22°C (64.4-71.6°F)	(2.7+3.8L/1000)µm
		15-25°C (59.0-77.0°F)	(2.9+4.3L/1000)µm
		5-35°C (41.0-95.0°F)	(3.6+5.8L/1000)µm
ISO-10360-4 MPE_{THP}/MPT_{THP} †		SP25:	4.0µm/40sec
ISO-10360-5: 2010 $P_{FTU,MPE}$		TP7:	2.2µm
		SP25:	2.2µm

† This test is not part of Mitutoyo America's standard A2LA-accredited CMM calibration procedure and is quoted upon request.



See page L-21.

Stylus Configurations for ISO Tests	
TP7:	Ø4mm x L20mm
SP25:	Ø4mm x L50mm

Environment	5-35°C (71.6-64.4°F)
Rate of change	2.0C° or less per hour 10.0C° or less per day
Gradient	1.0C° or less per meter vertical & horizontal

MACH-3A 653

SERIES 360 — Inline CNC CMM

Inline CNC CMM (horizontal type) incorporating the CMM controller and host computer in the main unit results in a compact spacing-saving footprint for the shop floor. This series is designed for 24-hour operation, resulting in stable operation.



MACH-3A 653

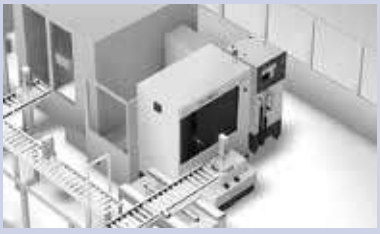

SPECIFICATIONS

Type: INLINE		Model No.	MACH-3A 653
Range		X axis	23.62" (600mm)
		Y axis	19.68" (500mm)
		Z axis	11.02" (280mm)
Resolution			0.0000039" (0.0001mm)
Guide Method			Mechanical bearing on each axis
Maximum Drive Speed 3D			47.71"/s (1,212mm/s)
Maximum Acceleration 3D			1.21G (11,882mm/s²)
Mass			8,818 lbs. (4000kg)
Dimensions W x D x H			73.62 x 50.39 x 75.59" (1870 x 1280 x 1920mm)
ISO-10360-2:2009 $E_{0,MPE}$			
	SP25:	19-21°C (66.2-69.8°F)	(2.2+3.5L/1000)µm
		15-25°C (66.2-69.8°F)	(2.5+4.2L/1000)µm
		10-30°C (50.0-86.0°F)	(2.9+5.0L/1000)µm
		5-35°C (66.2-95.0°F)	(3.2+5.7L/1000)µm
	TP7:	19-21°C (66.2-69.8°F)	(2.5+3.5L/1000)µm
		15-25°C (66.2-69.8°F)	(2.8+4.2L/1000)µm
		10-30°C (50.0-86.0°F)	(3.2+5.0L/1000)µm
		5-35°C (66.2-95.0°F)	(3.5+5.7L/1000)µm
ISO-10360-4 MPE_{THP}/MPT_{THP} †		SP25:	4.0µm/40sec
ISO-10360-5: 2010 $P_{FTU,MPE}$		SP25:	2.2µm
		TP7:	2.5µm

† This test is not part of Mitutoyo America's standard A2LA-accredited CMM calibration procedure and is quoted upon request.

See page L-2 for explanation of ISO accuracy statements.



TP7 Probe
(High-precision tough-trigger)
See page L-20.

Stylus Configurations for ISO Tests	
TP7:	Ø4mm x L20mm
SP25:	Ø4mm x L50mm

Environment	5-35°C (71.6-64.4°F)
Rate of change	2.0C° per hour 10.0C° per day
Gradient	1.0C° or less per meter vertical & horizontal

Mitutoyo

MACH KO-GA-ME

SERIES 360 — Inline CNC CMM

Mitutoyo Ko-ga-me is a compact, 3D CNC measuring system that can be configured to almost any process. Use for stand-alone applications or integrate into cells. If required, the system can measure workpiece features that exceed the Ko-ga-me's X stroke by mounting the workpiece, or the Ko-ga-me, on an auxiliary X axis. Ideal for inspection of large or small workpieces and offers a wide choice of measuring probes including touch-trigger, optical and scanning types. (Note: Probe choice may be restricted, depending on the application.)





SP25 Scanning Probe
See page L-21.



TP200 Touch-Trigger Probe
See page L-20.

SPECIFICATIONS

Type: INLINE	Model No.	KGM888-B	KGM12128-B
Range	X axis	3.14" (80mm)	4.72" (120mm)
	Y axis	3.14" (80mm)	4.72" (120mm)
	Z axis	3.14" (80mm)	
Resolution		0.00000078" (0.02µm)	
Guide Method		Straight-motion hard bearing	
Maximum Drive Speed 3D		13.38"/s (340mm/s)	
Maximum Acceleration 3D		0.68G (6,750mm/s²)	
Mass: main unit		61.7 lbs. (28kg)	
Dimensions* W x D x H: (height includes Z measuring range)		15.03 x 14.68 x 30.90" (382 x 373 x 785mm)	
Measuring Accuracy (ISO 10360-2:2009)			
TP200/SP25:	19-21°C (66.2-69.8°F)	(2.4+5.7L/1000)µm	
	15-25°C (66.2-69.8°F)	(2.7+6.4L/1000)µm	
	10-30°C (50.0-86.0°F)	(3.1+7.2L/1000)µm	
	10-35°C (50.0-95.0°F)	(3.4+7.9L/1000)µm	
Probing Error (ISO 10360-2:2009)			
	TP200/SP25:	2.0µm	
Scanning probing error (ISO 10360-4:2000)			
	SP25:	2.7µm/(30s)	

Stylus Configurations for Accuracy Tests	
TP200:	Ø3mm x L10mm
SP25:	Ø4mm x L50mm

Environment	10-35°C (50.0-95.0°F)
Rate of Change	2.0C° or less per hour 10.0C° or less per day
Gradient	1.0C° or less per meter vertical & horizontal





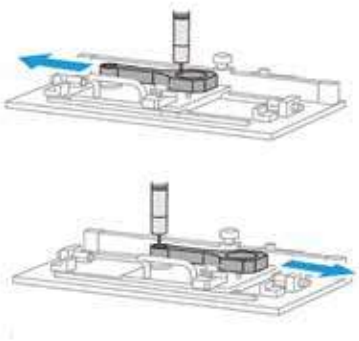

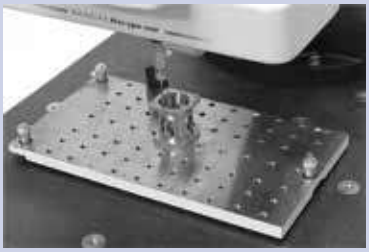

See page L-2 for explanation of ISO accuracy statements.

CARBapex / CARBstrato

SERIES 355 — Car Body Measuring System CNC CMM

NEW-STYLE
Vision Measuring Systems



SurfaceMeasure Probes
(Laser scanning probes—non-contact)

See page L-22 for probe system information.

The world's largest class
The CARBapex and CABstrato series is a lineup of cost-effective horizontal, large CNC CMMs and offers the world's largest class measurement range, making it possible to measure car bodies.

Single & Dual
Single- and dual-types are available to fit the intended use.
Single type: Measure a workpiece with a single CMM from the CARBstrato series.
Dual type: Measure a workpiece placed between two simultaneously controlled CMMs from the CARBstrato series.

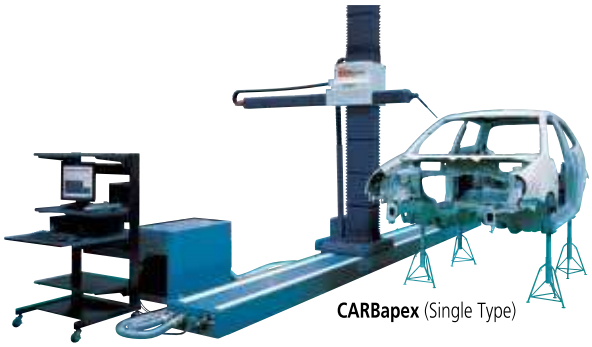

CARBapex (Single Type)

Because the height of the X-axis base of both the single- and the dual-type is set lower, the required depth for the foundation before the installation is relatively shallow.

Remarkable usability
The CARBapex series not only has remarkable usability, but also has the ability to enhance the safety operation by performing the procedures on the shop floor. The Y-axis spindle in the vertical direction is set lower in order to perform measurements at a lower workpiece setting height. In addition, the small cross-section of the Y-axis spindle reduces interference during measurement and expands the measurement area inside a car body.

Safety after installation
Since the height of the X-axis base is set lower, the required depth for the foundation before installation is comparatively shallow. The structure is designed to avoid both long- and short-term problems, such as a aging of the foundation (concrete) or accuracy deterioration resulting in the bimetal phenomenon caused by deformation of the foundation or the X-axis base due to common environmental changes.

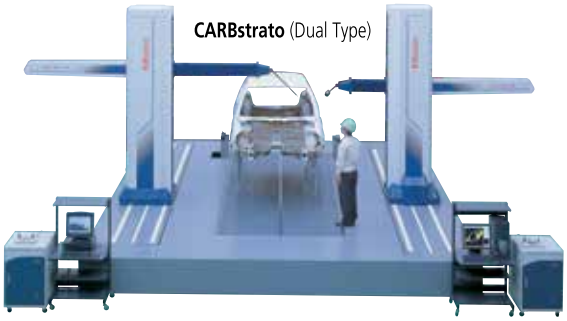

CARBstrato (Dual Type)

Options
- Line laser probe for non-contact measurement (SurfaceMeasure).
- Measurement point search function, a necessity for car body measuring, is included in the metrology software.
- A variety of optional safety devices enhance operator safety. Built to order.



Main Unit Startup System

This machine incorporates a startup system (relocation detection system), which disables operation when an unexpected vibration is applied or the machine is relocated. Be sure to contact your nearest Mitutoyo prior to relocating this machine after initial installation.

SPECIFICATIONS

Type: HORIZONTAL ARM	Model No.		CARBapex 601624	CARBstrato 601624
Range	X axis		236.21" (6000mm)	
	Y axis (Single)		62.99" (1600mm)	
	Y axis (Dual)		153.54" (3900mm)	
	Z axis		94.48" (2400mm)	
Resolution			0.0000039" (0.0001mm)	
Mass	Single Arm		4,982 lbs. (2260kg)	13,845 lbs. (6280kg)
	Dual Arm		9,964 lbs. (4520kg)	27,690 lbs. (12560kg)
Dimensions W x D x H	Single Arm		163.18 x 275.58 x 144.33" (4145 x 7000 x 3666mm)	176.10 x 238.34 x 155.62" (4473x 7324 x 3953mm)
	Dual Arm		322.79 x 275.58 x 144.33" (8190 x 7000 x 3666mm)	348.26 x 238.34 x 155.62" (8846x 7324 x 3953mm)
ISO-10360-2:2009 $E_{0,MPE}$ 16-26°C (60.8-78.8°F)	Single Arm	TP20:	(25+28L/1000≤95)µm	(18+20L/1000≤70)µm
		SP25:	(20+28L/1000≤95)µm	(15+20L/1000≤70)µm
	Dual Arm	TP20:	(50+35L/1000≤120)µm	(38+30L/1000≤90)µm
		SP25:	(45+35L/1000≤120)µm	(35+30L/1000≤90)µm
ISO-10360-5: 2010 $P_{FTU,MPE}$	Single Arm	TP20:	20µm	15µm
		SP25:	15µm	13µm
	Dual Arm	TP20:	20µm	15µm
		SP25:	15µm	13µm

Stylus Configurations for ISO Tests	
TP20:	Ø3mm x L10mm
SP25:	Ø4mm x L50mm

See page L-2 for explanation of ISO accuracy statements.

Mitutoyo

MCOSMOS

Software for Manual / CNC Coordinate Measuring Machines

Three levels of module configuration

MCOSMOS has three choices of module configuration. From the basic MCOSMOS-1 to the advanced MCOSMOS-3, choose a configuration for your measurement applications.

MCOSMOS Coordinate Measuring Machine Software				
	CNC			Manual
	MCOSMOS-1	MCOSMOS-2	MCOSMOS-3	MCOSMOS-M
GEOPAK	●	●	●	●
CAT1000P	▲	●	●	—
CAT1000S	▲	●	●	▲
Scanpak	▲	▲	●	▲
Gearpak	▲	▲	●	—
MAFIS*	▲	▲	▲	—

● Standard ▲ Option — Not supported * *Requires Scanpak*

GEOPAK (Basic Geometry Module)
Geopak provides an easy graphical console through the use of tool bars and windows which can be personalized to the operator's preference. Geographically enhanced displays provide step-by-step on-screen wizards that prompt the operator, allowing even inexperienced users to create routines to measure parts. The entry-level MCOSMOS-1 software includes flexible advanced tools demanded by the most experienced operators; e.g. looping, formula calculations or expressions that use variables, libraries of day-to-day subroutines and conditional statements, which can add logic for a variety of applications.

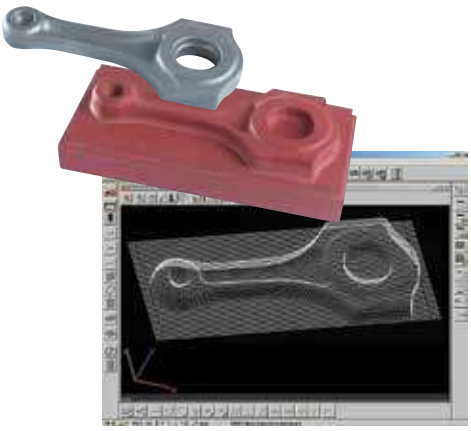

SCANPAK (2D Profile Evaluation Module)
For the scanning and evaluation of workpiece contours (2D), and data transfer to CAD system.

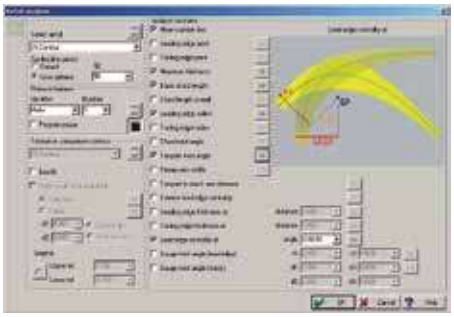

MAFIS (Mitutoyo Airfoil Inspection System)
Evaluation and analysis of airfoil shapes such as turbine blades that require special calculations according to the particular design specifications. The MAFIS system uses cross sectional data of the shape obtained by Scanpak to perform these calculations and outputs the result via the standard geometry program.

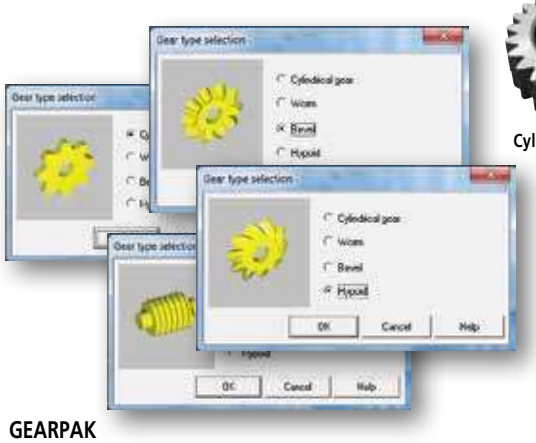

GEARPAK
(Gear Measurement and Analysis Module)
Advances in CMM controller techniques make the measurement of gears feasible, and the Gearpak module takes advantage of this to bring sophisticated measurement capabilities within reach.



Cylindrical Gear Spur



Cylindrical Gear Helical



Worm Cylindrical Gear



Hypoid



Straight-Bevel



Spiral-Bevel

MiCAT
Mitutoyo Intelligent Computer Aided Technology
the standard in world metrology software
CMM

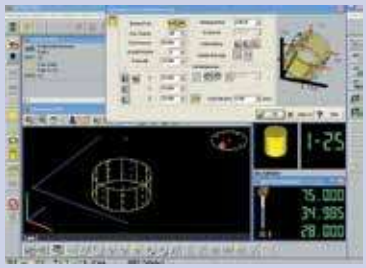

Mitutoyo Controlled Open Systems for Modular Operation Support

MCOSMOS by Mitutoyo is a proprietary metrology suite of inter-related modules and dedicated expansion modules for the Microsoft Windows 7 operating system. The world's standard in metrology software, MCOSMOS is supported in 37 locations worldwide and in 12 languages. *(A proud Microsoft Gold Partner.)*

Developed with MiCAT (Mitutoyo Intelligent Computer Aided Technology), your Mitutoyo CMM is streamlined with intuitive user interfaces that provide a familiar look and feel to operate multiple modules. They work together seamlessly for applications throughout the entire production process to put reliable metrology at you fingertips.

MCOSMOS allows integration among a whole series of applications, improving the efficiency of your CMM and the productivity of your quality control functions. Specific expansion modules are available including GEOPAK or for specific applications such as gear measurement, airfoil analysis, reverse engineering and integrating CAD with metrology.



CAT-1000P (Prismatic)
Not available for manual CMMs

CAT1000P significantly facilitates the programming of measurement tasks during the GEOPAK learn mode. All data for measuring parts and tolerance evaluations are taken from the CAD model via pointing device (mouse, trackball, etc.). The same principles apply for programming probe paths (clearance and measurement), while at the same time using the nominal directly from the CAD model for tolerance comparison.

Spatial's 3D InterOp delivers the highest quality data exchange between CAD formats, enabling superior CAD file translation.

Standard with CAT-1000 is ACIS (*.sat) and STEP AP203, which are both licensed copies from Spatial InterOp.CATIA V5, SolidWorks, NX Siemens (Unigraphics), Parasolids, AutoDesk Inventor, Pro-Engineer and IGES or VDAFS exchange formats are available as an option.

The comprehensive suite of translators provides import/export for all applications, including ACIS, CGM and Parasolid-based applications.

3D InterOp is embedded in many of today's leading design, engineering and manufacturing applications.

CAT-1000 uses 3D ACIS® Modeler, Spatial's prominent modeling component used in more than 350 customer applications with more than 2 million seats worldwide.

CAT-1000 fully supports and reads PMI (Product Manufacturing Information), which is embedded in the model for datum alignment and GD&T (Geometric Dimensioning and Tolerancing).

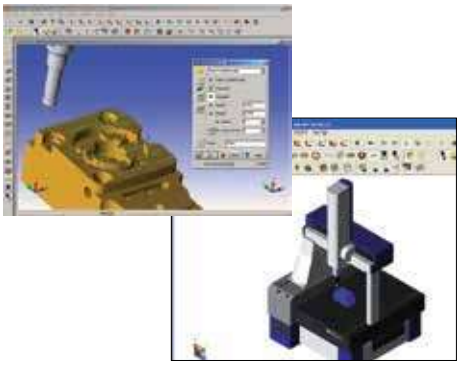

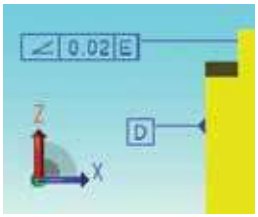

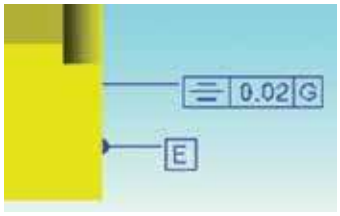

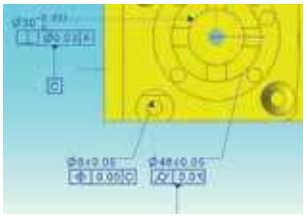

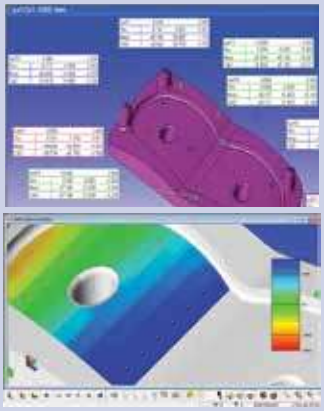

CAT-1000S (Free-form Sculpted)

CAT-1000S is a highly versatile tool that can be used on a manual CMM or a CNC CMM. A coordinate system in GEOPAK is compared to the CAD model. Real-time surface disposition is displayed by showing a color class to determine if there is material to remove or replace.
Surface deviation can be displayed as spherical points or as a gradient surface. Cones also can be used to show the direction of the deviation.
GEOPAK CNC can create grid pattern to verify the surface points. A one-click tool calculates a collision-free probe path to measure a grid of surface points offset from the edge.

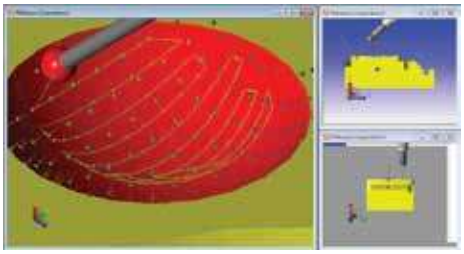

If the CAD model has specific points, GEOPAK-CNC can drive the machine to the defined points or vertices.



In addition to the online/offline part program creation, CAD model-based generation of surface measurement points, and comparison of actual/nominal data, with graphical output is available.



MiCAT Planner

Automatic Measurement Program Generation Software

MiCAT Planner is Mitutoyo's latest software development for fast and efficient CMM part programming. Operation of MiCAT Planner is easy and intuitive. Programs are made with a few mouse clicks in jminutes instead of hours or days.

WORKFLOW:

1) Load design model
2) Select target CMM
3) Part placement via virtual alignment
4) Measurement program creation
5) Translate to Geopak MCOSMOS



MiCAT Planner toolbar is workflow based.

In order to generate a measurement plan, GD&T information attached to the 3D Design Model is needed. Design Model formats marked "w/PMI" will read GD&T information created in the CAD system and stored in the Design Model file. Design Model formats without PMI can be annotated with GD&T in MiCAT Planner.

Design Model Support:

- Siemens NX w/PMI
- CATIA v5 w/PMI
- PRO/E w/PMI
- SOLIDWORKS w/PMI
- ACIS (SAT)

If the Design Model does not contain GD&T information, or the information is incomplete, GD&T information can be added or edited with MiCAT Planner with the following:

- Add new GD&T to an existing feature
- Add GD&T to a new feature
- Edit exiting GD&T information
- Modify display of GD&T in 3D view

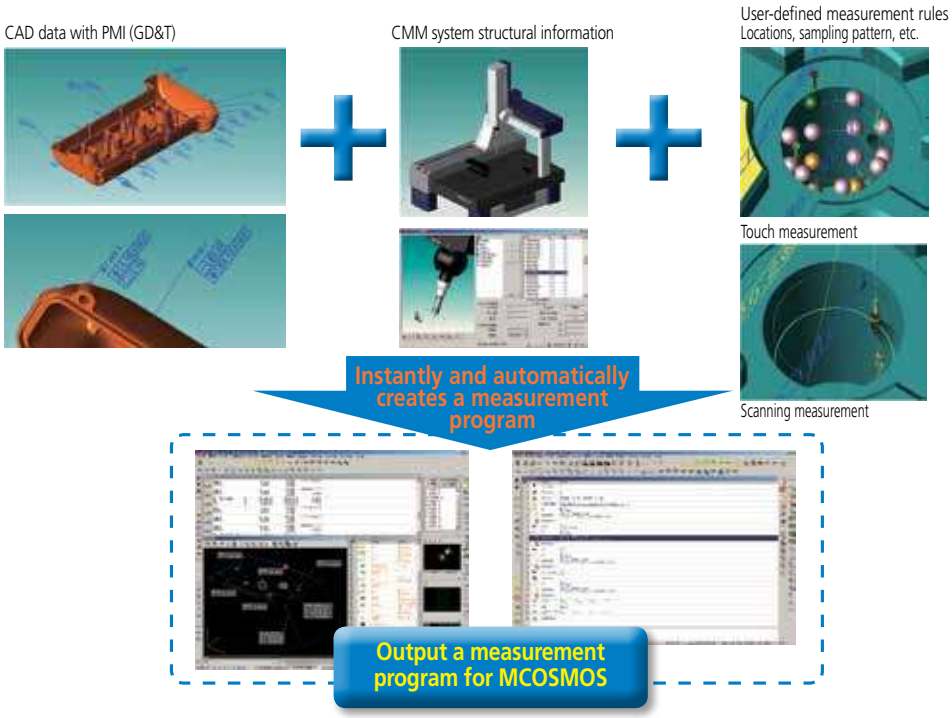

MiCAT

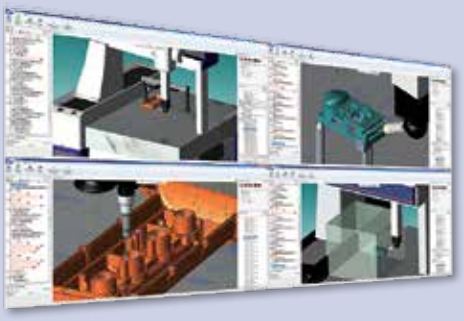

Feature/Benefits of MiCAT Planner:

Automatic part program generation
- Up to 90% time savings in CMM part program creation

Collision control
- Minimize potential costly and damaging probe collisions

Program simulation
- Virtual pre-run of measurement program ensures maxim efficiency

Rule editor
- Automatically apply individual or global measurement strategies for all part programs or specific programs

Plan view
- Easy selection of characteristics, features and measurement point sets to include or exclude from the measurement plan

Property pane
- Feature parameter settings for the current selected item can be an exception to a user-defined rule

Direct Help
- Clear, concise explanation for features that can't be measured (missing GD&T, probe angle not defined, etc.)

GD&T Wizard
- The GD&T Wizard enables the use of Design Models that do not include any PMI by allowing the user to add, edit or delete PMI information without modifying the original CAD file. All additions, changes or deletions reside solely within the MiCAT Planner project database. *(See Design Model Support above left for the current list)*

www.mitutoyo.com/MiCAT

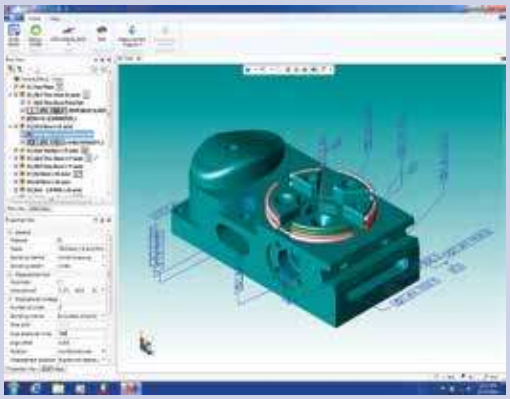

Measurement Plan

The measurement plan is synchronized with the 3D view and Program View. For example, a feature can be selected in any of the views (Plan View, 3D View, Program View) and is highlighted in the other views. Manual reordering of the feature measurement order is possible by drag and drop of the features in the Plan View. Users can select a feature, characteristic or point set in the Plan View to modify the corresponding properties in the Property View.

Load and Use MCOSMOS DME Configurations:

(DME: Dimensional Measuring Equipment)

- Load predefined DME configurations from CMM SystemManager
- Default DME is read directly from the MCOSMOS settings
- MiCAT Planner generates a program specifically for the selected DME
- Align DME and Design Model by mating, dragging, center of table or volume, or by direct numerical input
- Import PCS (part coordinate system) information from MCOSMOS

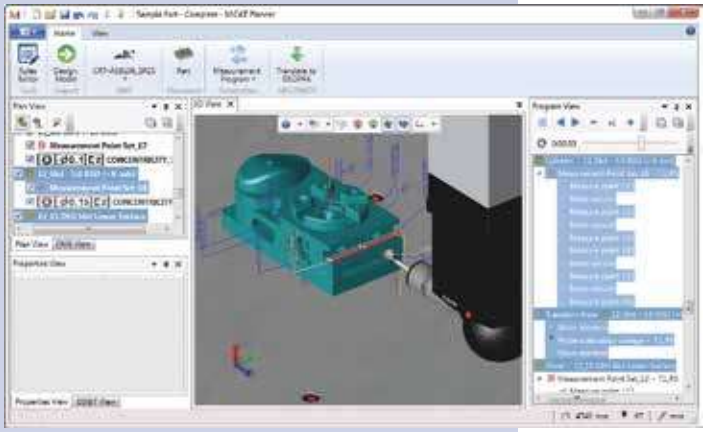

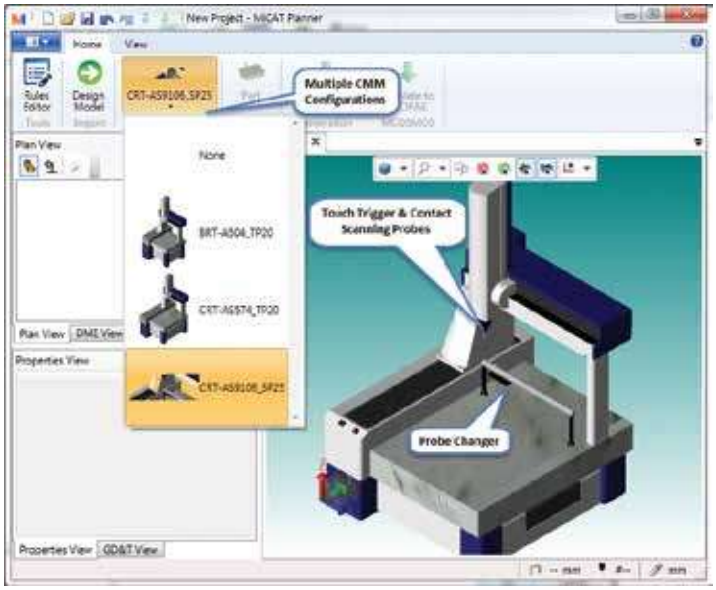

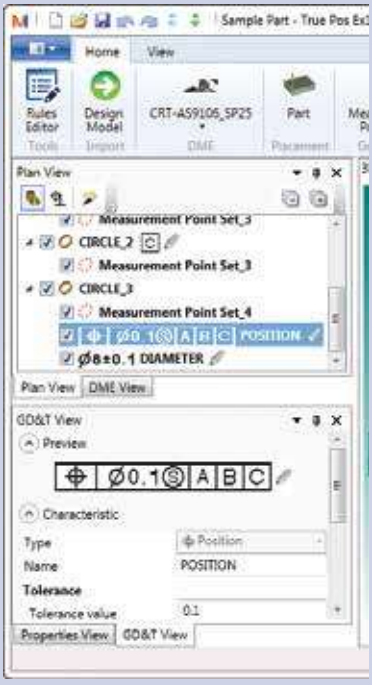

Rules Editor

The Rules Editor allows users to create rules to define measurement approaches, such as number of points per feature, sensor type, fitting method and automatic sensor selection.

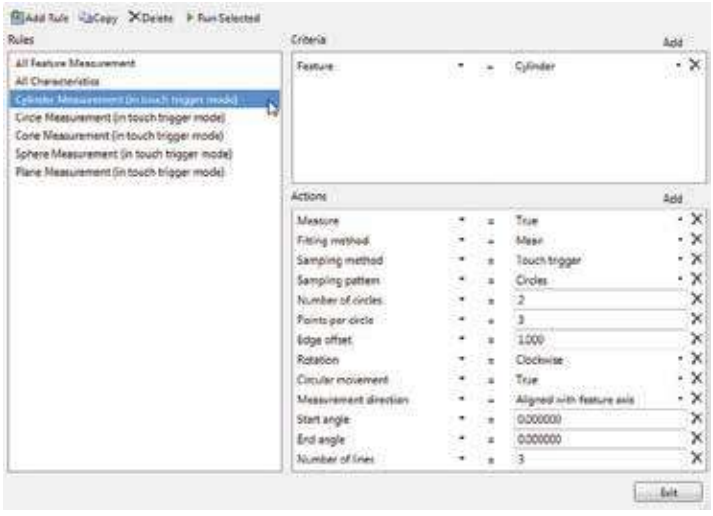



Rules are applied during CAD import and can be re-applied after design model import. The Run Selected command automatically updates the measurement plan with the current defined rules and updates changes in the Plan and Program views.

Mitutoyo

CMM Probe & Change Rack Options

Touch-trigger Probe System



MH20i - Manual head **CMM:MANUAL | CNC**

MH20i is a manually adjustable probe head with an integral TP20 kinematic stylus module mount with two-axis indexing. The A-axis rotates through ±180° in the X-Y plane. The B-axis rotates through 90° in the Z plane. A lever locks the head in one of up to 168 repeatable positions, set at 15° increments. Capable of carrying the full range of TP20 modules, which can be changed without re-qualification, providing qualification has taken place in each position with each stylus/module combination.



PH1 - Manual probe head **CMM:MANUAL | CNC**

The PH1 is a general purpose, swivel-type probe head. Its compact design makes it ideally suited to a CMM where manual orientation of an M8 thread-mounted touch-trigger probe is required (TP20, TP200). The PH1 provides two axes of movement. The A-axis allows probe orientation in the vertical plane; the B-axis allows rotational probe orientation. Axis rotation is in relation to the shank mount. Probe re-qualification is required after each re-orientation of the PH1. TP200 not supported on manual CMM..



MIH - Manual indexable probe head **CMM:MANUAL | CNC**

The manually indexable head (MIH) has 720 repeatable positions and features an autojoint probe mount for fast, repeatable probe changing. This probe head is compatible with the TP6A touch probe directly and supports the TP20, andTP200 probe with the use of the autojoint extension bars (e.g. PAA1). An integral LCD enables easy programming with the facility to memorize up to 20 probe positions. Not for use with multi-wire probes.



Probe Mount: M8
Stylus Mount: M2

TP20 - Touch-trigger probe **CMM:MANUAL | CNC**

The TP20 is a compact kinematic touch-trigger probe system featuring a two-piece design, comprising probe body and detachable stylus module(s), connected using a highly repeatable magnetic kinematic coupling. This provides the facility to change stylus configurations either manually or automatically without the need for requalification of the stylus tips. Modules offering a range of trigger forces allow the probe performance to be best matched to the measurement task.



Probe Mount: M8
Stylus Mount: M2

TP200 - Touch-trigger probe **CMM:CNC**

The TP200 features quick-change stylus configurations without the need for requalification, utilizing electronic strain sensing techniques to improve on the form measuring accuracy and operating life that can be achieved when compared with kinematic touch-trigger probes. The TP200 probe is a two-piece design comprising the probe body and a detachable stylus module that holds the stylus assembly.



Probe Mount: Autojoint
Stylus Mount: M4

TP7 - High-accuracy, touch-trigger probe **CMM:CNC**

The TP7M is a high-accuracy touch-trigger probe with a maximum repeatability of $2\sigma \leq 0.25\mu m$. The TP7M can mount a long stylus up to 150mm. In combination with the longest autojoint probe extension of 200mm for direct mounting to the PH10M or PH10MQ, gives the TP7M a maximum access distance of 350mm.



UMAP-CMM - Micro-touch probe **CMM:CNC**

A stylus with an ultra-small diameter of ø0.1mm or ø0.3mm can be used. Measurement of miniscule form and dimensions from practically any direction is possible by mounting on the PH10MQ.

See page L-28 for stylus information.

MCR20 - Module Change Rack (TP20)



The MCR20 is designed to securely hold the stored TP20 probe modules for automatic changing (CNC CMM only) and to protect from airborne contaminants.

SCR200 - Module Change Rack (TP200)

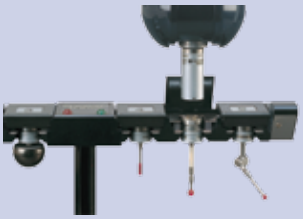

The SCR200 provides automatic, high-speed changing between up to six TP200 stylus modules (CNC CMM only). The SCR200 is powered by the separate probe interface, PI 200, and provides features to facilitate safe stylus changing.

MSR - Manual Storage Rack (TP20/TP200)



The MSR1 manual storage rack holds up to 6 pre-qualified stylus assemblies fitted to TP20 or TP200 probe modules to simplify manual module changing. The MSR1 can be mounted on the CMM table or on a vertical surface.

MAP - Manual Autojoint Probe (TP6A/TP7)



The MAP (manual autojoint probe) stand is a low-cost storage rack capable of holding up to six autojoint mounted probes and extension bars. The MAP stand can be mounted directly on the table of a CMM, cabinet, wall or any vertical surface.

SC6 - Stylus Changer (MPP-310Q)



ACR3 - Autojoint Change Rack (SP25M)



FCR25 - Flexible Change Rack (SP25M)



FCR25-L3 - Flexible Change Rack (SP25M)



FCR25-L6 - Flexible Change Rack (SP25M)



SCP80 - Stylus Change Port (SP80)



CMM Probe & Change Rack Options

Motorized Probe Heads

The range of PH10 PLUS motorized probe heads increases throughput by giving CNC CMMs the added capability of program controlled probe re-orientation. This enables the inspection of features at different angles without the need for frequent, time-consuming stylus cluster changes.



PH10T

Shank-mounted head with two-wired probe capability and an M8 thread supporting TP20, TP200 and TP6 touch-trigger probes.



PH10M

PH10M/10MQ

The PH10M PLUS can carry long extension bars and multi-wire probes such as QVP, SP25M, SurfaceMeasure, Surftest, UMAP-CMM or TP7M. The highly repeatable autojoint allows rapid probe or extension bar changing without the need for re-qualification. The PH10MQ PLUS is a variant of the PH10M PLUS that allows the motorized head to be attached directly to the quill with the B-axis of the head inside the quill itself. This option provides a neater and shorter probe mount, with only the A-axis protruding from the quill.



PH10MQ

Scanning Probe Systems



MPP-310Q Ultra-High Accuracy Scanning

The MPP310Q is a multifunctional measuring head for CNC CMMs. It not only performs continuous contact scanning measurements at V2≤0.3µm, it also allows highly precise point measurements and self-centering measurements. The MPP-310Q incorporates 0.01µm resolution high-precision scales for each axis (XYZ). Air bearings on all axes ensures smooth measuring with minimal measuring force. Software-controlled clamps in each axis eliminate probe deflection while scanning slanted or arched surfaces to reduce measurement errors. The MPP-310Q allows for contact force as low as 0.03 Newtons for sensitive workpieces or when using very small stylus tips. Scanning speed up to 120mm/second can be achieved on known path geometry. Stylus holder changing is supported with the SCR6.

SP25M Compact High-Accuracy Scanning Probe

The SP25 is a compact high-accuracy scanning probe with an outside diameter of ø25 mm. This multi-functional probe is suitable for CNC coordinate measuring machines that perform not only scanning measurement, but also high-accuracy point measurement, as well as data collection from a centering-point measurement. The SP25M measuring head is extremely flexible, in addition to its measuring accuracy at very low contact forces, the SP25M can be used with probe systems ranging in lengths from 20mm (SP25-1) up to 400mm (SP25-4). The SP25M can be used on a fixed probe head (PH6M), or a motorized probe head (PH10M/10MQ). Probe systems, probe module and stylus holder changing is supported with the ACR3 and FCR25 rack changing systems.





SP80 Extended-Length High-Accuracy Scanning

The SP80 scanning measuring head is specially designed for extended length stylus with high-accuracy measurement for lengths up to 500mm (measured in the vertical and horizontal directions). The multifunctional head for CNC CMM' allows not only scanning measurements but also high-precision point measurements and self-centering measurements. Stylus holder changing is supported with the SCP80.



See page L-28 for stylus information.

Mitutoyo

Non-Contact CMM Probe Options

SurfaceMeasure 606/610/1010/606T

FEATURES

Mitutoyo's line of laser scanning probes automatically adjusts to workpiece surface characteristics to deliver highly efficient measurements. With a conventional laser probe, laser intensity and camera sensitivity must be adjusted according to the environment and workpiece material. In contrast, the SurfaceMeasure line laser probes, which automatically adjust for these factors, enable hassle-free and more reliable laser scanning results.

The SurfaceMeasure makes it possible to use coordinate measuring machines as production systems that can be used throughout the entire process, from development and prototyping to production.



Development phase

Optimized design utilizing measurement point cloud data significantly improves the efficiency of the development process, even when no master model or CAD data is available.







Prototyping phase

Shortens the entire process from prototyping to mass production because simulations can be used to compare prototypes with CAD data, check for part interference and set clearances, and optimize machine settings.



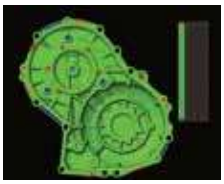

Production phase

Allows the obtained data to be used for correcting dies, for example, by controlling the variability in mass-produced products, and feeding analysis data back to the preceding process step.

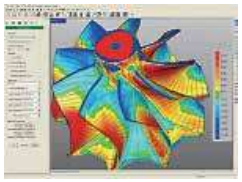

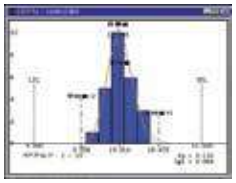



With a conventional laser probe, laser intensity and camera sensitivity must be adjusted according to the environment and the workpiece material. In contrast, the **SurfaceMeasure Series**, which automatically adjusts for these factors, enables simpler and more comfortable laser scanning.



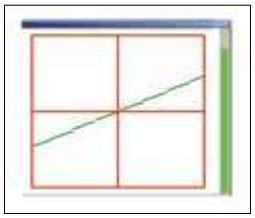

Measuring a color sample plate



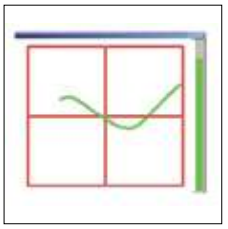

Measuring a glossy object

Because the laser intensity and camera sensitivity are automatically adjusted, stable shape data can be obtained even when the workpiece has multiple colors and varying degrees of reflectance.

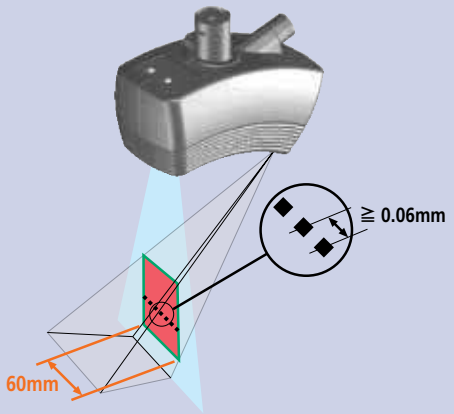

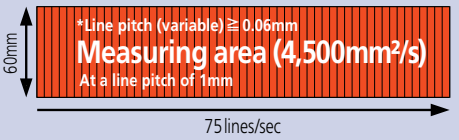

The line-laser crossing enables simultaneous scanning by 3 laser beams, thus allowing efficient measurement of complicated shapes.
(Applies to **SurfaceMeasure 606T**)

Improvement in measurement efficiency by reducing the frequency of probe attitude change.

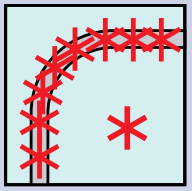

No change of probe attitude

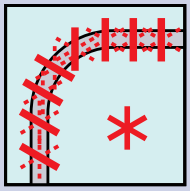

Individual beam selectable

Simultaneous measurement of top and side by concurrently scanning 3-directional laser beams

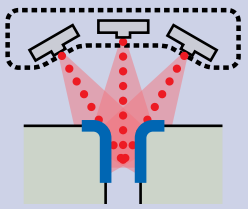

The laser beams converge from 3 directions toward a central point.



606/610/1010

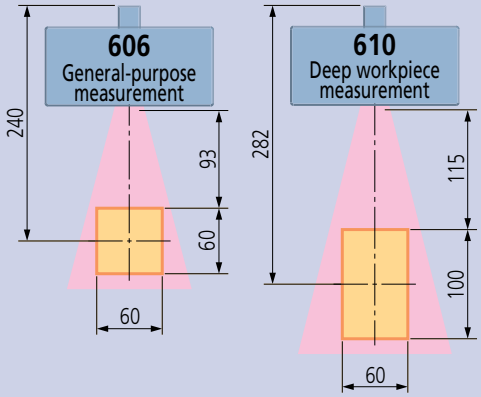

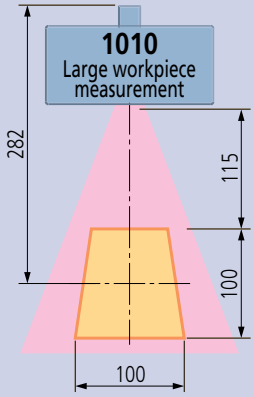



606T

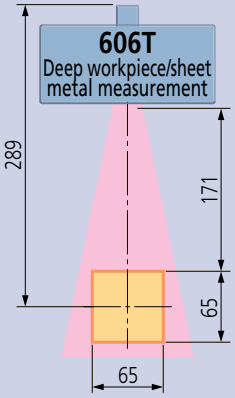

Specifications of the SurfaceMeasure Series

Mitutoyo offers an optimal choice of non-contact probes to satisfy combinations of accuracy, measuring speed and measuring range.

SPECIFICATIONS

Item/Model		SurfaceMeasure 606	SurfaceMeasure 610	SurfaceMeasure 1010	SurfaceMeasure 606T
Laser irradiation method		Line Laser (single)			Line Laser (cross)
Max. scan width		2.36" (60mm)	2.36" (60mm)	3.94" (100mm)	.2"×2.56"(3×65mm)
Max. scan depth		2.36" (60mm)	3.94" (100mm)	3.94" (100mm)	2.56" (65mm)
Working distance		3.54" (93mm)	4.53" (115mm)	4.53" (115mm)	6.85" (174mm)
Scanning error *		12µm	15µm	18µm	17µm
Max. Acquisition rate		75,000 points/sec			3×25,000 points/sec
Mass		0.95 lbs (430g)	0.88 lbs (400g)	0.88 lbs (400g)	1.06 lbs (480g)
Laser Class	EN/IEC	Class2 [EN/IEC 60825-1(2007)]			
	JIS	Class2 [JIS C 6802 : 2011]			
	Laser type	Red semiconductor			
Line Laser	Wavelength	660nm			
	Output	4mW			
Point Laser	Wavelength	635nm			—
	Output	1mW			—

*	Accuracy inspection environment	Temperature: 20℃±1℃ / Humidity: 50%±10%
	Target workpiece	Specified master ball for inspection (Diameter 30mm)
	Inspection method	According to Mitutoyo's acceptance procedure. (1σ/sphere measurement, probe alone)

Probe Features and Applications

SurfaceMeasure	Features	Applications
606	The highest-accuracy model in the SurfaceMeasure series	Powertrain parts, domestic electric parts, as well as small parts
610	Greater measuring range in the depth direction than that of series 606 to support deep workpieces	General power train parts, car body inner panels
1010	Greater measuring range in the width direction than that of series 610, thus effective at reducing measuring time	Car body inner panels
606T	Implements 3D measurement using 3 laser beams, thereby reducing the frequency of probe attitude change	Transmission cases, sheet metal, car body inner panels

Features of non-contact CMM:

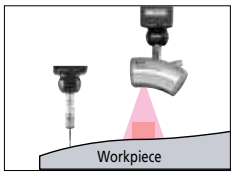

Reliability

- Based on a CMM that supports quality assurance operations.
- Allows the verification of non-contact measurement data with a contact probe.

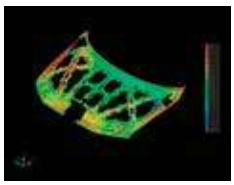

Hybrid measurement

- Visualizes a shape that was previously invisible by establishing a cutting plane from measured points.
- Allows interchange between contact and non-contact probes according to the required measuring accuracy or workpiece shape.

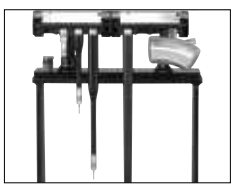

Fully automatic measurement

- Automatic probe change with a probe changing rack.
- Allows programming a series of jobs from measurement to report creation.

Mitutoyo

MSURF

Software for SurfaceMeasure Probe for CNC CMMs

MiCAT
Mitutoyo Intelligent Computer Aided Technology
the standard in world metrology software
CMM

Laser Scanning: MSURF-S

A scanning path can be created by defining a scanning start point, a scanning length and a scanning width.

- Specify the 3 points using the joystick while watching the camera view.
- When a point group or master data exists on the screen, 3 points can be defined by selecting the data using the mouse. Automation of measuring paths from start to finish reduces measuring time.
- Operating of a joystick and buttons enables configuration and execution of a scanning path, and registration to or deletion from a macro. The ability to measure without using a PC has significantly improved operational efficiency, particularly for large-sized CMMs.





Scanning paths can be registered as a measurement macro.

- The measurement conditions of a measurement macro can be partly or wholly changed by the override function.
- The sub-macro function is effective for measuring multiple identical workpieces.
- A trial calculation of measurement macro execution time is based on the measurement conditions and the specifications of the CMM.



MSURF-S can be started from MCOSMOS.

- A work coordinate system created with MCOSMOS can be used with MSURF-S. Therefore, fully automatic measurement combined with contact measurement/ non-contact measurement can be performed.

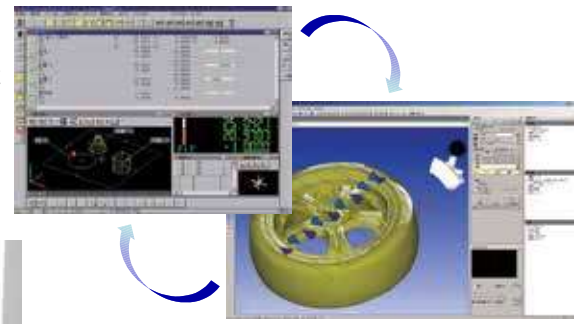



Note: If not using ACR3, probe replacement is performed manually.

MSURF software enables users to perform operations from measurement to evaluation on the same platform when the non-contact line laser probe, SurfaceMeasure, is used. Three types of software are provided according to the task:

MSURF-S: Calculates point cloud data measured by CNC CMM with SurfaceMeasure. Generates scanning paths by defining the scanning start position, length and width.

MSURF-I: Conducts analysis or comparison verification of measured point cloud data in reference to nominal data (supporting CAD data import).

MSURF-G: Primarily creates part programs (measurement procedure programs) using CAD data.

MiCAT
Mitutoyo Intelligent Computer Aided Technology
the standard in world metrology software
cmm

Inspection: MSURF-I

CAD data import

- SAT and STEP format are supported as standard.
- As an option, CATIA V4, CATIA V5, Creo, Unigraphics/NX, IGES, VDAFS, Parasolid, and Solidworks are available.

Comparison by features

- MSURF-I can detect various features from point cloud or mesh data and compare with nominal data. It also can calculate distances between features that have point data such as circle elements.
- Detectable features include basic plane, point, straight line, circle, slot, cylinder, cone, sphere, etc., and also weld bolt, weld nut, cylindrical pin, T-shaped stud and more.



Comparison of cross-sectional shape

- Cut of a point cloud, mesh data or master data allows for comparison of cross-sectional shapes and calculation of angle, distance, radius of curvature and more.
- The turbine blade analysis function enables calculation of LE thickness, TE thickness, maximum thickness, cord length, etc.

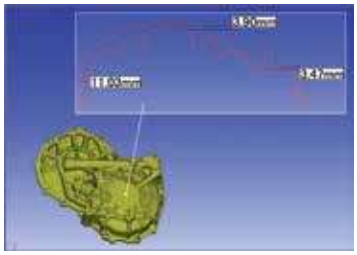

Section evaluation (dimensional calculation)



Turbine blade analysis (optional function)

Comparison of plane shape

- The plane shape error will be displayed on a color map by comparing a point cloud or mesh data with CAD data.
- Thickness can be displayed on a color map, therefore, it is not necessary to cut a real workpiece.
- Capability of defining the shape of digital calipers enables evaluation of various types of uneven gaps.
- The evaluation of surface curvature can be used for evaluating an angle R within a specified dimensional tolerance.

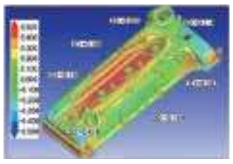

Error color map

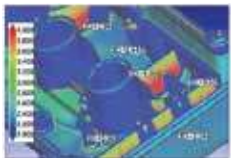

Thickness color map

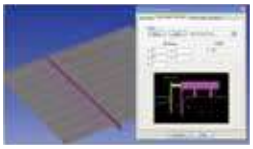

Evaluation of step/clearance



Surface curvature evaluation

Creation of operating procedure macro by automation function

- The automation function allows users to record the operating procedure including execution of a measurement macro.
- A series of operations from measurement to evaluation and report can be automated.

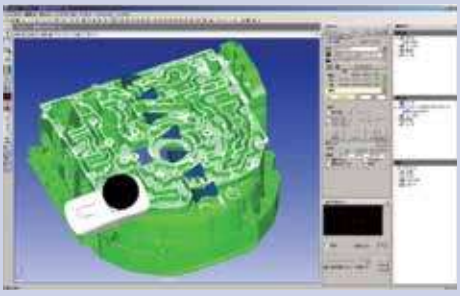

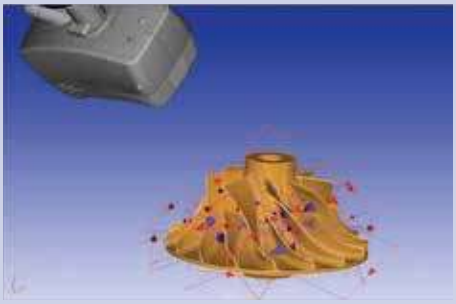

Off-line teaching: MSURF-G

MSURF-G allows users to create measurement macros using model data. Therefore, users can start measurement immediately when a real workpiece is available.
MSURF-G can improve the operating rate of your measuring instrument. Combining it with MSURF-I can reduce the man-hours from measurement to product evaluation.

- CMM time for creating measurement macros can be reduced.
- Measurement macros are created regardless of operator's skill level.
- The workflow from measurement to evaluation can be optimized.

MSURF-PLANNER

MSURF-PLANNER software automatically creates measurement macros (surface form, feature form) for the line laser probe from 3D CAD data.
Optimized data (travel path, number of probe head revolutions, etc.) of a measurement path contributes to improvements in productivity.

*MSURF-PLANNER is optional software for MSURF-S and MSURF-G.

Non-Contact CMM Probe Options

QVP Quick Vision Probe

Provides image measuring capability for coordinate measuring machines.

The QVP probe performs form measurement by image processing micro geometry that cannot be measured by a contact-type probe or flexible bodies that are easily deformed by slight measuring forces. Although the method of microscopic measurement with the centering microscope mounted on the coordinate measuring machine has been used since CMMs came into use in the industry, they have an inherent disadvantage in that the operation of identifying positions is dependent on the operator, possibly resulting in measurement errors. Even with a CNC CMM, manual measurement may still need to be performed, such as with an installed centering microscope. The QVP probe is a vision probe for CMMs and was developed based on Mitutoyo's state-of-the-art technology in order to enable full automation of image measurement with a CNC CMM. This technology was originally developed for Mitutoyo vision measuring machines.



Automatic detection of workpiece edge

The QVP-captured image will have various automatic edge detections performed by the dedicated software, Visionpak, and then various calculation processes (calculation of dimensions and geometrical deviations) will be performed with the general purpose measurement program, Geopak.



Standard provision of white LED illumination

Since the QVP is equipped with the standard co-axial light running through the lens system, as well as white-light LED ring illumination, which is bright and has a long service life, no auxiliary illumination is required. The light volume can be set to between 0 and 100% in 1% increments.

Mounting on the automatic probe changer

The QVP also can be mounted on an automatic probe changer (ACR3), allowing full-automatic measurement including both the contact and non-contact types in combination with the contact-type probes. QVP requires PH10M, PH10MQ or PH6M probe head.



QVP Specifications

QVP Main Unit	CCD Size		1/3 inch (B/W)			
	Optical tube magnification		0.375×			
	Illuminating function	Co-axial	White light LED source (built-in): Power dissipation 5W or less			
		Ring	White light LED source: Power dissipation 10W or less			
	Mass		Automatic-joint type: 315g, shank type: 390g			
	Optical magnification		0.375×	1.125×	1.875×	3.75×
	Observation range (mm)		9.6×12.8	3.2×4.3	1.9×2.6	1×1.3
	Working distance (mm)		61	72.3	61	51
Objective	Magnification		ML1×	ML3×	ML5×	ML10×
			Optional	Standard	Optional	Optional
	Numerical Aperture N.A.		0.03	0.09	0.13	0.21
	Depth of focus (μm)		306	34	16.3	6.2
	Mass		80g	55g	60g	95g
QVP I/F BOX	Supply voltage		AC100 to 240V			
	Frequency		50/60Hz			
	Power capacity		45W			
	Mass		3800g			

Objective ML1X	**375-036**
Objective ML5X	**375-034**
Objective ML10X	**375-035**



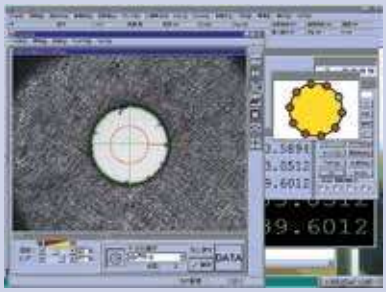

VISIONPAK
Dedicated data processing software

VISIONPAK operates using the Microsoft Windows operating system and is a general purpose measurement program for coordinate measuring machines. It displays the image window when it detects a workpiece edge. After detecting an edge, it undertakes various calculations with regular general purpose measurement programs.

Variety of image processing functions

With the powerful image processing functions (tools), it can detect various forms of edges at high speed. It can measure in the height direction by means of its auto-focus function, and save the captured image as the image data (bitmap format).

Outlier removal function

In ordinary micro-form measurement it is often difficult to remove burrs and dusts from the objective workpiece, resulting in an inevitable measurement error. In contrast, VISIONPAK can recognize, for example, the obstruction as an outlier and bypass it during measurement.

Standard-type detector

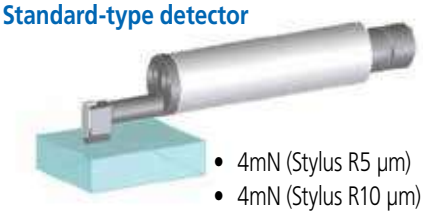

- 4mN (Stylus R5 µm)
- 4mN (Stylus R10 µm)

Small hole detector



- 4mN (Stylus R5 µm)

Extra-small hole detector



- 4mN (Stylus R5 µm)

Deep groove detector



- 4mN (Stylus R5 µm)

Gear-tooth surface detector



- 4mN (Stylus R5 µm)





Note: For new purchase of Crysta-AS700 and larger, retrofit of existing Crysta-AS CMM by request.

CMM Surface Roughness Measuring

CMM Surftest Probe

CNC CMMs can be used to measure surface roughness, eliminating workpiece changeover to a second measurement device.



Mitutoyo has developed a range of surface roughness analysis products from handheld portable units to CNC-type Surftest with broader functions and higher accuracy. By utilizing the technologies developed over the years on surface roughness measuring machines, our coordinate measuring machines can execute surface roughness analysis by implementing a Surftest Probe and the dedicated software. The Surftest probe requires PH10M or PH10MQ probe head.

FEATURES

- Can be attached to our CNC CMM. (Retro-fitting is possible depending on the model.)
- The auto joint-probe system allows probe changing automatically between scanning (SP25M) and the CMM Surftest surface analysis probe. The measurement and evaluation of size, shape and roughness, is completely automated with auto joint-probe changing.*
- PH10M(Q) allows surface roughness measurement for features requiring rotation.
- The CMM Surftest Probe is derived from the successful Mitutoyo SJ-210/310 Series of portable surface finish units.

* Requires ACR3 change rack (OPTION)

Skid Measurement Specifications

Item		Specifications
Probe (Detector specifications)	Measurement range	AUTO,25,100,360 µm
	Driving range	17.5 mm
	Measurement speed	0.25, 0.5, 0.75 mm/s
	Stylus tip radius	2,5,10*µm *Standard-type detector only
	Measuring force	4mN (Std) , 0.75mN (Opt.)
Evaluation software	Analysis software	SURFPAK-SP
	Control software	MCOSMOS
	Miscellaneous	Multi-wire autojoint probe head required (PH6M, PH10M, PH10MQ)

Skidded Measurement

In skidded measurements, surface features are measured with reference to a skid following close behind the stylus. This cannot measure waviness and stepped features exactly, but the range of movement within which measurement can be made is greater because the skid tracks the workpiece surface contour.

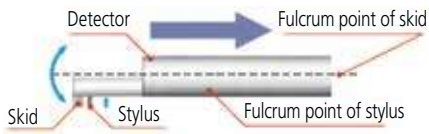

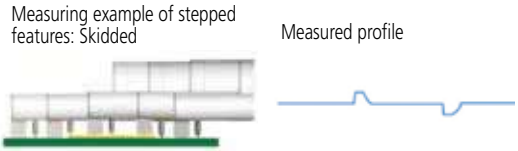

Mitutoyo

CMM Probing Accessories

Mitutoyo Styli Kits

M2



STARTER - K651376



BASIC 1 - K651377



BASIC 2 - K651354



EXPANSION - K651378



PROFESSIONAL - K651379

M3



STARTER - K651380



BASIC 1 - K651381



Carbon Fiber 1 - K651318



Carbon Fiber 2 - K651319



Carbon Fiber 3 - K651320

Materials used for spherical probes



Ruby

As the hardest of all probe element materials, ruby is the perfect all-round material. Spherical probes made of ruby have been used for most standard applications. The low specific density of ruby enables the mass of the stylus tip to be kept as small as possible. This effectively allows the elimination of false triggers caused by mass inertia when the CMM moves.



Zirconium oxide

Because of the specific surface properties of balls made of zirconium oxide - a ceramic compound – it is ideally suited for aggressive scanning of abrasive surfaces, such as workpieces made of cast iron. Zirconium oxide has virtually the same hardness and wear-resistant properties as ruby.



Silicon nitride

Silicon nitride is extremely hard and wear-resistant with the lowest surface roughness of all ball materials. Specific advantage: Silicon nitride is resistant to absorbing aluminum from workpiece surfaces.

Locating Pins 1 - K551123



Locating Pins 2 - K551124

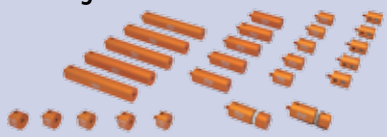

Clamping Elements 1 - K551125



Supporting Elements 1 - K551126



Supporting Elements 2 - K551127



Straight Pins - K551128

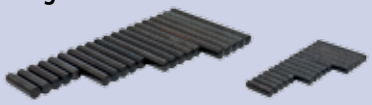

Receiver Brackets 1 - K551129



Receiver Brackets 2 - K551130



Magnet 1 - K551131



Joints 1 - K551132



CMM Accessories

Mitutoyo ECO-FIX Kit Fixture Systems

The Mitutoyo Eco-Fix Clamping System for modular CMM and vision product workholding setups work well for different part sizes/types and environments. The design combines operational modularity advances with lower-cost solutions. This can be found both in the reduction or elimination of hard fixturing costs and setup time. This system is comprised of well-marked, color-coded components designed to simplify part measurement requirements. Magnetic or threaded fastening points deliver fast, plug-and-play connectivity. First-time fixturing jobs can be established and reconfigured in a matter of minutes for quick turnaround for future part measurement. Or, as needed, fixtures can be built and stored to meet all common part measurement requirements. Base plates are hard-coated and other components are machined for durability.

The entry-level Mitutoyo Eco-Fix Kit S version is comprised of a 250mm x 250mm base plate footprint and 59 total components in the system. The Eco-Fix Kit L is a larger version and built for more complex part fixturing applications (measuring 500mm x 400mm in base plate footprint and a total of 98 total components in the system).

Eco-Fix Kit - S K551048

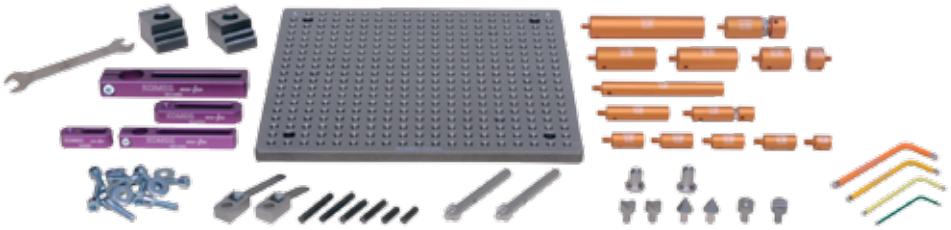

Eco-Fix Kit L - K551049

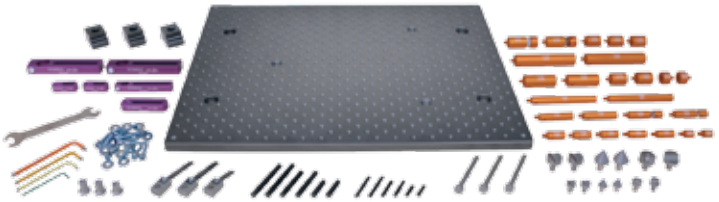

Eco-Fix MAG S - K551089

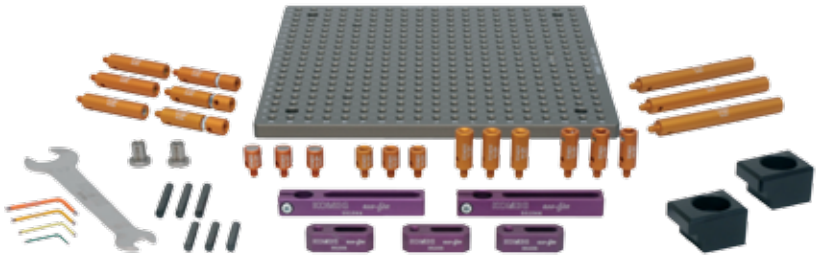

Eco-Fix MAG L - K551090

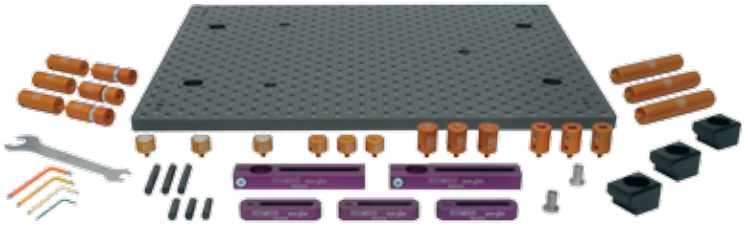

Mitutoyo

Mitutoyo Quality



People – Quality starts with our people. Our team is comprised of the best and the brightest in the industry.

Confidence – Confidence you have each time you rely on a Mitutoyo product.

Reliability – Reliability of the product that you use many times every day.

Accuracy – Accuracy you need to preserve tight machining tolerances.

Relationship – Relationship you have formed with Mitutoyo staff and distributors.

Longevity – Longevity of a tool or instrument that maintains factory specifications.

Savings – Savings that are realized by implementing metrology solutions that reduce production costs.

Feel – Feel of a caliper or micrometer that you have come to expect.

Pride – Pride you feel when you produce the best manufactured product possible.



Vision Measuring Systems

INDEX

Vision Measuring Systems	
Quick Scope Series 359 — Manual Vision Measuring System	M-2
Quick Image Series 361 — Non-contact 2-D Vision Measuring System	M-3
Quick Vision Active Compact CNC Vision Measuring Systems	M-4
QV Apex Series 363 — CNC Vision Measuring System	M-5
QV STREAM PLUS Series 363 — CNC Vision Measuring System	M-6
QV Hyper Series 363 — High-Accuracy CNC Vision Measuring System	M-7
QV HYBRID TYPE1, TYPE4 Series 365 — CNC Vision Measuring System with a Non-contact Displacement Sensor	M-8
Quick Vision WLI Series 363 — CNC Video Measuring System with White Light Interferometry	M-9
ULTRA QV Series 363 — Ultra-High Accuracy CNC Vision Measuring System	M-10
UMAP Vision System TYPE2 Series 364 — Micro-Form Measuring System	M-11
QV ACCEL Series 363 — Large-Format CNC Vision Measuring System	M-12
Quick Vision with Touch-Trigger Probe	M-13
Accessories for Quick Vision	M-14
OPTI-FIX Kits — Modular Clamping System for Vision Measuring Systems	M-15-17
Quick Guide to Precision Measuring Instruments	M-18,19

QVH4 606

Quick Vision WLI



QI-A2010C

Mitutoyo

Quick Scope

SERIES 359 — Manual Vision Measuring System

FEATURES

- Surface, contour and fiber-optic ring light illumination options enable users to configure the QS lighting to meet a variety of measurement needs.
- Powerful, Windows®-based QSPAK software offers a spectrum of measuring and analysis capabilities.
- Functions include auto-focus, measurement playback, one-click edge detection, graphic display, 48 different macros and a pattern matching function for several common part features.
- Excellent surface observation model for a variety of workpieces.
- 0.1µm resolution and 150mm Z-axis range.
- Power zoom enables quick magnification changes.
- Fine illumination capability enables lighting changes to match workpiece requirements.
- The quick release system on the stage enables instant switching between coarse and fine movements.
- Quick Navigation function enables the user to repeat measurements quickly.



Illumination

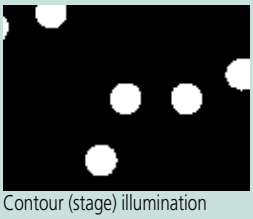

Contour (stage) illumination

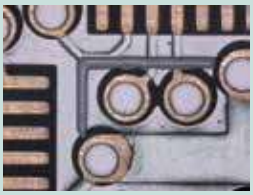

Surface (coaxial) illumination

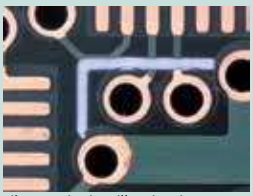

Fiber-optic ring illumination

During automatic measurement the part program provides automatic control over the illumination system, thus providing the necessary balance between user-friendliness and high efficiency.

SPECIFICATIONS

Model No.	QS-L2010ZB	QS-L3017ZB	QS-L4020ZB
Range (X-axis / Y-axis / Z-axis)	8" x 4" x 6" / 200 x 100 x 150mm	12" x 6.7" x 6" / 300 x 170 x 150mm	15.7" x 8" X 6" / 400 x 200 x 150mm
Resolution	0.1µm		
Scale type	Linear encoder		
Measuring accuracy (at 20°C and 3.0x magnification)	XY: (2.5+20L/1000)µm Z: (5+40L/1000)µm		
Image detecting unit	1/2" 3 MP Color CMOS camera		
Illumination (Halogen)	Co-axial light, fiber-optic ring light, stage light		
Stage glass size	9.84 x 5.91"(250 x 150 mm)	14.57 x 9.45"(370 x 240 mm)	17.32 x 9.45"(440 x 240 mm)
Max. workpiece height	6" / 150mm		
Max. stage loading	22 lbs / 10 kg	44 lbs / 20 kg	33 lbs / 15 kg
Dimensions (W x D x H)	25" x 30" x 28" / 624 x 769 x 722 mm	27" x 33" x 36" / 682 x 837 x 916 mm	30" x 33" x 37" / 757 x 837 x 930 mm
Mass (main unit)	158.7 lbs / 72 kg	308.6 lbs /140 kg	321.9 lbs / 146 kg

System diagram

Software options

- Measurement support software: **QS-CAD I/F**
- Shape evaluation and analysis software: **FORMPAK-QV**
- Statistical process control software: **MeasurLink**

QS-LZB

PC Set
Standard software
QSPAK

Peripheral options

- Foot switch - standard type (**937179T**)
- Calibration chart (**02AKN020**)

Stage accessory options

- Rotary table
  - ·Rotary table with fine-feed knob (A) (**176-305**)
    For 2010 size stages
  - ·Rotary table with fine-feed knob (B) (**176-306**)
    For 3017 or 4020 size stages
- Swivel center support (**172-197**)
- Holder with clamp (**176-107**)
- V-block with clamp (**172-378**)

*1 Adapter B (**176-310**) is required for 2010 models.
Adapter (**176-304**) is required for 3017 and 4020 models.
*2 Can be installed on rotary table with fine-feed knob (A).
Cannot be installed on rotary table with fine-feed knob (B).

Control Box



For **QS-LZB**

Optical system magnification ratios available for QS-LZB

Total magnification Field of View (mm)	29X 8.8x6.6	38X 6.8x5.1	49X 5.2x3.9	58X 4.4x3.3	87X 2.9x2.2	116X 2.2x1.6	145X 1.7x1.3	202X 1.2x0.9
QS-LZB Working distance (mm)	0.75X	0.98X	1.28X	1.5X 55	2.25X	3X	3.75X	5.25X

* Total magnification shown in the above table is a reference value displayed in the default window state when using 22-inch LCD.

Quick Image

SERIES 361 — Non-contact 2-D Vision Measuring System

Double-telecentric optics enable efficient measurement with a wide field of view

Batch measurement with a wide field of view 1.259″ x 0.945″(32 x 24mm) realized using a 0.2X magnification model can substantially improve measurement efficiency.
With a 0.5X magnification model, dimensions of very small workpieces and stepped workpieces easily can be measured.





Quick Image is a new concept in 2-D vision measuring instruments. It provides unique features for improving measurement efficiency.

FEATURES

- Long focal depth and wide field of view
- Telecentric optical system
- 3 mega-pixel color CCD camera
- Large quadrant LED ring light
- Single-click measurement execution
- Displays measurement results on video window
- Orientation of part is automatically detected

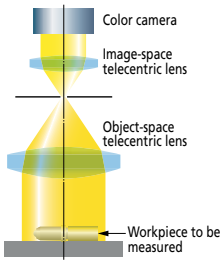



QI-A2010C



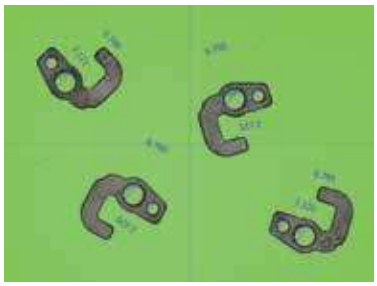

Actual image acquired with a 0.2X magnification model

SPECIFICATIONS

Model		QI-A1010C	QI-B1010C	QI-A2010C	QI-B2010C	QI-A2017C	QI-B2017C	QI-A3017C	QI-B3017C	QI-A4020C	QI-B4020C
Range	X, Y-axis	4 x 4″ / 100 x 100mm		8 x 4″ / 200 x 100mm		8 x 7″ / 200 x 170mm		12 x 7″ / 300 x 170mm		16 x 8″ / 400 x 200mm	
	Z-axis	4″ / 100mm		4″ / 100mm		4″ / 100mm		4″ / 100mm		4″ / 100mm	
Measuring mode		High-resolution mode and Normal mode									
Accuracy	Within the screen*	QI-A models: ±2µm (high-resolution mode), ±4µm (normal mode) QI-B models: ±1.5µm (high-resolution mode), ±3µm (normal mode)									
	U_{1XY}	±(3.5+0.02L)µm L = measuring length (mm)									
Repeatability within the screen (±2σ)		QI-A models: ±1µm (high-resolution mode), ±2µm (normal mode) QI-B models: ±0.7µm (high-resolution mode), ±1µm (normal mode)									
CCD camera		3 Megapixel, 1/2 inch color CCD camera									
Optical system	Magnification**	0.2X	0.5X	0.2X	0.5X	0.2X	0.5X	0.2X	0.5X	0.2X	0.5X
	Working distance	3.5″ / 90mm									
	Depth of focus	High-resolution mode: ±0.6mm (±0.6mm), Normal mode: ±11mm (±1.8mm) ( ): QI-B models									
Illumination	Contour	✔		✔		✔		✔		✔	
	Surface	✔		✔		✔		✔		✔	
	4-quadrant LED	✔		✔		✔		✔		✔	
Stage glass size		6.7 x 6.7″/170 x 170mm		9.5 x 5.5″/242 x 140mm		10.2 x 9.1″/260 x 230mm		14.2 x 9.1″/360 x 230mm		17.3 x 9.1″/440 x 232mm	
Max. stage loading		22lbs / 10kg				44lbs / 20kg				33lbs / 15kg	
Mass		154 lbs / 70kg		163 lbs / 74kg		308 lbs / 140kg		326 lbs / 148kg		340 lbs / 154kg	

*Inspected to Mitutoyo standards by focus point position.
**Double telecentric system

Mitutoyo

Quick Vision Active

Compact CNC Vision Measuring Systems

FEATURES

- High-quality zoom optics with interchangeable lenses
- High-resolution and high-speed color camera
- Compact design saves significant space—available in two sizes
- Powerful QVPAK 3D vision software
- Contact and noncontact measurement
- Touch-probe retrofittable
- Programmable LED stage, coaxial and 4-quadrant ring light



1X, 1.5X and 2X interchangeable lens



Quick Vision Active 202

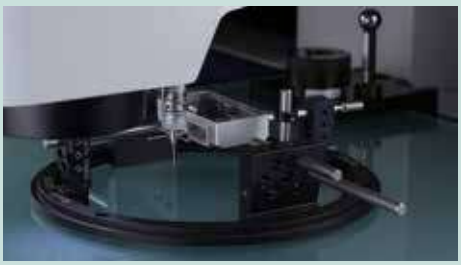

Touch-Probe System

The QV touch-probe system is available on all the models. All touch-probe systems include probes, modules, calibration articles and installed software. (See page M-13)

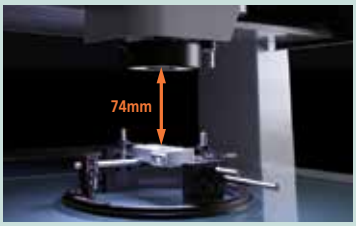

Long working distance 74mm
*when using Z-objective 1X

Optical magnification	0.5X	0.65X	0.75X	0.85X	0.98X	1X	1.28X	1.3X	1.5X	1.7X	2X	2.25X	2.5X	3X	3.5X	3.75X	4X	5X	5.25X	7X
View field (mm) Horizontal (H)	13.60	10.46	9.07	8.00	6.94	6.80	5.31	5.23	4.53	4.00	3.40	3.02	2.72	2.27	1.94	1.81	1.70	1.36	1.30	0.97
Vertical (V)	10.80	8.31	7.20	6.35	5.51	5.40	4.22	4.15	3.60	3.18	2.70	2.40	2.16	1.80	1.54	1.44	1.35	1.08	1.03	0.77

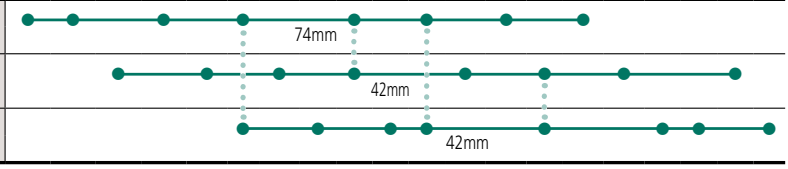

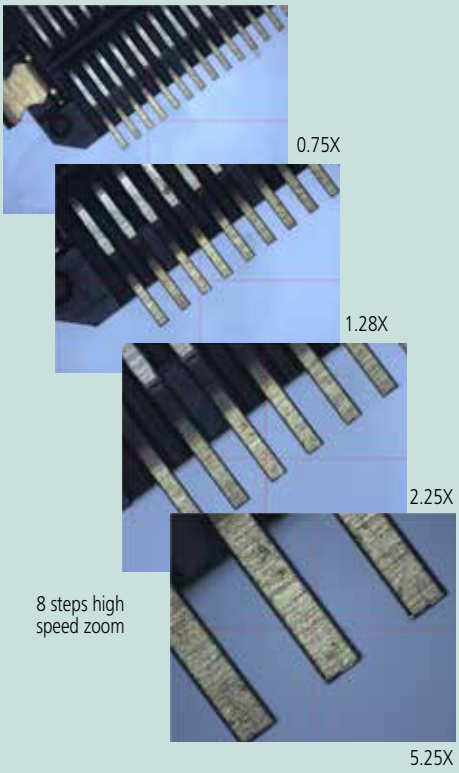

8 steps high speed zoom

SPECIFICATIONS

Name	Quick Vision Active	
Model No.	**QV ACTIVE 202 / QV ACTIVE 202 TP**	**QV ACTIVE 404 / QV ACTIVE 404 TP**
Range (X,Y,Z-axis) with vision head	9.84" x 7.87" x 5.91" 250 x 200 x 150 mm	15.75" x 15.75" x 7.87" 400 x 400 x 200 mm
Resolution	0.1 µm	
Accuracy (µm)*	$E_{1(X,Y)}$ = (2+3L/1000) $E_{1(Z)}$ = (3+5L/1000) $E_{2(X,Y)}$ = (2.5+4L/1000)	
Max. stage loading	22 lbs. (10 kg)	44 lbs. (20 kg)
Mass	265 lbs. (120 kg)	606 lbs. (275 kg)
Illumination	(White LED) Contour / Coaxial / 4-quadrant ring light	
Magnification change system	Zoom optical system with 8 positions (Standard 1.5X magnification lens)	
Sensor type	High-resolution CMOS color camera	
Optional objective lenses	1X and 2X magnification	
Factory option	Series 364 (TP) Touch-Probe option (Page M-13)	

* L is arbitrary length in mm

Image Multi-AutoFocus

The optimal focus can be selected for each surface texture and measured feature, realizing high reproducibility and reliable edge detection.



Surface focus

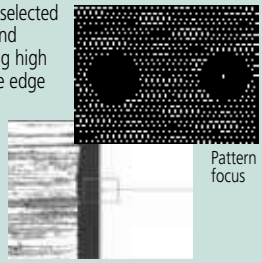

Pattern focus

Edge focus

Programmable Ring Light (PRL)

Fine control of obliquity and direction provides illumination optimal for measurement. Obliquity can be arbitrarily set in the range from 30° to 80°. This type of illumination is effective for enhancing the edge of inclined surfaces or very small steps. Illumination can be controlled independently in every direction, front and back, right and left. Measurement with edge enhancement is possible by forming a shadow with lighting from only one direction.

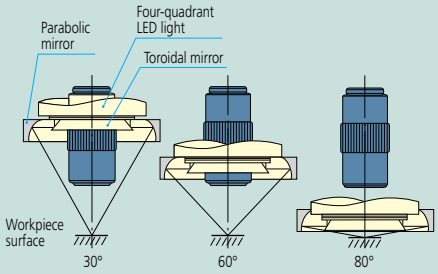

Tracking Auto Focus (TAF)

The TAF feature focuses continuously, adjusting to changes in the height of the object being measured. Automatic tracking of surface waves and warpage (in the Z axis height direction) improves measurement throughput. The feature also eliminates the hassle of focusing during manual measurement.

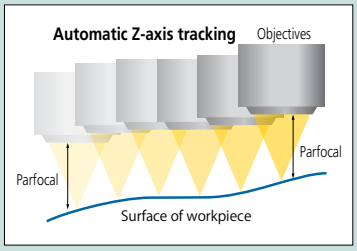

Tracking Auto Focus (TAF)

AF principle	Objective coaxial autofocusing (knife-edge method)				
Suitable objectives	QV-HR1x	QV-SL1x	QV-HR2.5x	QV-SL2.5x	QV-5x
Tracking range*2	6.3mm (±3.15mm)	6.3mm (±3.15mm)	1mm (±0.5 mm)	1mm (±0.5 mm)	0.25mm (±0.125mm)
Spot diameter*3	5.2µm	8.0µm	2.1µm	3.1µm	1.5µm
Laser source	Semiconductor laser (peak wavelength: 690nm)				
Laser power	0.9mW				
Laser safety	Class 2 (JIS C6802:2011, EN/IEC 60825-1:2007)				

*2 Varies according to workpiece surface texture and reflectance.
*3 These are design values.

Optional Accessories: Refer to page M-14.

QV Apex

SERIES 363 — CNC Vision Measuring System



QV Apex302PRO



Optional Index Table*

Automatic multi-plane measurement is possible with the optional index table. Refer to page M-14 for more details.
*Not available with QV ACCEL models



QV Apex606PRO

SPECIFICATIONS

Name		Quick Vision Apex		
Model No.		QV Apex 302 PRO	QV Apex 404 PRO	QV Apex 606 PRO
		QV Apex 302 (ISO10360-7)	QV Apex 404 (ISO10360-7)	QV Apex 606 (ISO10360-7)
		QV Apex 302 (w/TAF)	QV Apex 404 (w/TAF)	QV Apex 606 (w/TAF)
Measuring Range	X-axis	11.81" / 300mm	15.75" / 400mm	23.62" / 600mm
	Y-Axis	7.87" / 200mm	15.75" / 400mm	25.59" / 650mm
	Z-Axis	7.87" / 200mm	9.84" / 250mm	9.84" / 250mm
Resolution / Scale Unit		0.1µm / Reflective-type Linear Encoder		
Resolution Z Scale Using Tracking Autofocus (TAF)		0.3 µm		
Laser Auto Focus repeatability σ ≤		0.8 µm		
CCD camera		B & W		
Illumination Unit (LED)	Surface	White LED		
	Contour	White LED		
	Programmable Ring Light	White LED		
Max. Drive Speed	X/Y Axis	300 mm/s	400 mm/s	
	Z-Axis	300 mm/s	300 mm/s	
Measuring Accuracy*	E_{1X},E_{1Y}	(1.5+3L/1000)µm		
	E_{1Z}	(1.5+4L/1000)µm		
	E_{2XY}	(2+4L/1000)µm		
	$E_{U,MPE}$ (ISO10360-7:2011)	3+5.5L/1000, 3+6L/1000**		
	$P_{F2D,MPE}$ (ISO10360-7:2011)	2.3µm		
Magnification Change System		Programmable Power Turret (1x, 2x, 6x)		
Stage Glass Size		15.71" x 10.67" (399 x 271mm)	19.41" x 21.69" (493 x 551mm)	27.44" x 29.84" (697 x 758mm)
Maximum Stage Loading		44 lbs. (20kg)	88 lbs. (40kg)	110 lbs. (50kg)
Dimensions of Main Unit		37.44" x 33.82" x 41.06" (951 x 859 x 1043mm)	55.39" x 40.43" x 54.37" (1407 x 1027 x 1381mm)	78.15" x 51.54" x 61.81" (1985 x 1309 x 1570mm)
Mass of Main Unit (Including Machine Stand)		794 lbs. (360kg)	1276 lbs. (579kg)	3197 lbs. (1450kg)

*The measuring accuracy defined under the following conditions:
Programmable Power Turret: 2x Position; Objective Lens: 2.5x (HR or SL); L=Dimension between two arbitrary points (mm)
**Accuracy 3.5+5.5L/1000 for 20 ± 2°C, Accuracy 3+6L/1000 from 18 to 23°C

Mitutoyo

QV STREAM PLUS

SERIES 363 — CNC Vision Measuring System



QV STREAM PLUS 606

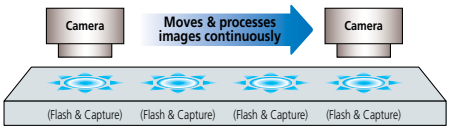

High-density mounting of ultra-high intensity LED elements

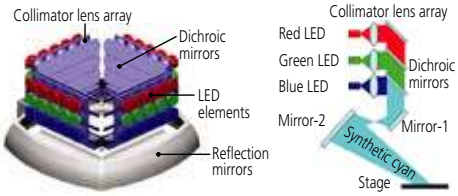

SPECIFICATIONS

Name		Quick Vision Stream Plus		
Model No.		QV Stream Plus 302 PRO	QV Stream Plus 404 PRO	QV Stream Plus 606 PRO
		QV Stream Plus 302 (w/TAF)	QV Stream Plus 404 (w/TAF)	QV Stream Plus 606 (w/TAF)
Measuring Range	X-axis	11.81" / 300mm	15.75" / 400mm	23.62" / 600mm
	Y-Axis	7.87" / 200mm	15.75" / 400mm	25.59" / 650mm
	Z-Axis	7.87" / 200mm	9.84" / 250mm	9.84" / 250mm
Resolution / Scale Unit		0.1µm / Reflective-type Linear Encoder		
Resolution Z Scale Using Tracking Autofocus (TAF)		0.3 µm		
Laser Auto Focus repeatability σ ≤		0.8 µm		
CCD camera		B & W, Progressive Scanning CCD		
Illumination Unit (C: Continuous; S: Stroboscopic; PRL: Programmable Ring Light)	Surface (C)	Red, Green, Blue & White (LED)		
	Surface (S)	Blue (LED)		
	Contour (C)	Blue (LED)		
	Contour (S)	Blue (LED)		
	PRL (C)	Red, Green, Blue & White (LED)		
	PRL (S)	Blue (LED)		
Max. Drive Speed	X/Y/Z Axis	300 mm/s		
Measuring Accuracy*	E_{1X},E_{1Y}	(1.5+3L/1000)µm		
	E_{1Z}	(1.5+4L/1000)µm		
	E_{2XY}	(2+4L/1000)µm		
Magnification Change System		Programmable Power Turret (1x, 2x, 6x)		
Stage Glass Size		15.71" x 10.67" (399 x 271mm)	19.41" x 21.69" (493 x 551mm)	27.44" x 29.84" (697 x 758mm)
Maximum Stage Loading		44 lbs. (20kg)	88 lbs. (40kg)	110 lbs. (50kg)
Dimensions of Main Unit		37.44" x 33.82" x 41.06" (951 x 859 x 1043mm)	55.39" x 40.43" x 54.37" (1407 x 1027 x 1381mm)	78.15" x 51.54" x 61.81" (1985 x 1309 x 1570mm)
Mass of Main Unit (Including Machine Stand)		794lbs. (360kg)	1276 lbs. (579kg)	3197 lbs. (1450kg)

*The measuring accuracy defined under the following conditions:
Programmable Power Turret: 2x Position; Objective Lens: 2.5x (HR or SL); L=Dimension between two arbitrary points (mm)

FEATURES



Non-stop Vision Measurement
Extreme Improvement in Throughput*
Conventional vision measuring systems endlessly repeat the cycle of stage displacement, stage stop, measurement, stage start and stage displacement. This mode of operation is a fundamental limitation on improving measurement throughput.
In contrast, the Quick Vision Stream system uses an innovative image capture technique that avoids the need to repeatedly stop the stage, thereby allowing for continuous measurement while still maintaining accuracy.

Measurement Throughput Comparison between QV STREAM and the Conventional System
STREAM PLUS series: more than 5 times faster
* Comparison of measurement throughput using a Mitutoyo sample workpiece with that of conventional Mitutoyo systems.

Newly Developed Stroboscopic Illumination System
The development of a high-intensity LED flash illuminator makes non-stop vision measurement possible. At the precise moment the stage reaches a measurement point, the illuminator creates an extremely short, high-intensity flash that effectively freezes all motion. The illuminator turns on and off so quickly that no image blur occurs, and the image is captured in full and accurate detail.
This innovative design takes full advantage of high-density, high-intensity LED arrays aided by collimating lenses and dichroic mirrors to produce ultra bright, directional and efficient illumination.

Tracking Auto Focus (TAF)

The TAF feature continuously focuses, adjusting to changes in the height of the object being measured. Automatic tracking of surface waves and warpage (in the Z axis height direction) improves measurement throughput. The feature also cuts out the hassle of focusing during manual measurement, reducing the work burden for measuring system operators.

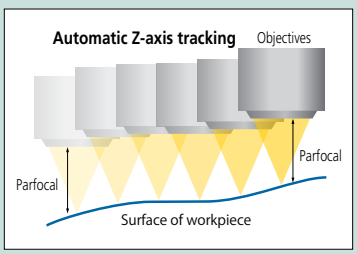

Tracking Auto Focus (TAF)

AF principle	Objective coaxial autofocusing (knife-edge method)				
Suitable objectives	QV-HR1x	QV-SL1x	QV-HR2.5x	QV-SL2.5x	QV-5x
Tracking range*2	6.3mm (±3.15mm)	6.3mm (±3.15mm)	1mm (±0.5 mm)	1mm (±0.5 mm)	0.25mm (±0.125mm)
Spot diameter*3	5.2µm	8.0µm	2.1µm	3.1µm	1.5µm
Laser source	Semiconductor laser (peak wavelength: 690nm)				
Laser power	0.9mW				
Laser safety	Class 2 (JIS C6802:2011, EN/IEC 60825-1:2007)				

*2 Varies according to workpiece surface texture and reflectance.
*3 These are design values.

Programmable Power Turret (PPT)

The three tube lens selection provides three magnification levels with the same objective lens. Replacement objective lenses allow a wide range of magnifications to support a variety of measurements.

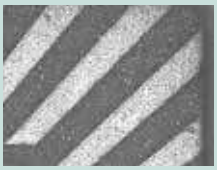

1X tube lens x 2.5X objective
View field: 2.5 x 1.88 mm



2X tube lens x 2.5X objective
View field: 1.25 x 0.94 mm



6X tube lens x 2.5X objective
View field: 0.41 x 0.31 mm

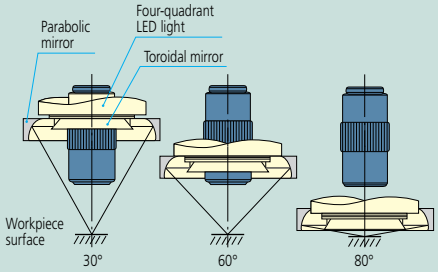

Programmable Ring Light (PRL)

Fine control of obliquity and direction provides illumination optimal for measurement. Obliquity can be arbitrarily set in the range from 30° to 80°. This type of illumination is effective for enhancing the edge of inclined surfaces or very small steps. Illumination can be controlled independently in every direction, front and back, right and left. Measurement with edge enhancement is possible by forming a shadow by lighting from only one direction.

QV Hyper

SERIES 363 — High-accuracy CNC Vision Measuring System



Hyper QV404PRO

SPECIFICATIONS

Name		Quick Vision Hyper		
Model No.		QV Hyper 302 PRO QV Hyper 302 (ISO10360-7) QV Hyper 302 (w/TAF)	QV Hyper 404 PRO QV Hyper 404 (ISO10360-7) QV Hyper 404 (w/TAF)	QV Hyper 606 PRO QV Hyper 606 (ISO10360-7) QV Hyper 606 (w/TAF)
Measuring Range	X-axis	11.81" / 300mm	15.75" / 400mm	23.62" / 600mm
	Y-Axis	7.87" / 200mm	15.75" / 400mm	25.59" / 650mm
	Z-Axis	7.87" / 200mm	9.84" / 250mm	9.84" / 250mm
Resolution / Scale Unit		0.02µm / Reflective-type Linear Encoder		
Resolution Z Scale using Tracking Autofocus (TAF)		0.26 µm		
Laser Auto Focus repeatability σ ≤		0.8 µm		
CCD Camera		B & W		
Illumination Unit (LED)	Surface	White LED		
	Contour	White LED		
	Programmable Ring Light	White LED		
Max. Drive Speed	X/Y/Z-Axis	200mm/s		
Measuring Accuracy*	E_{1X},E_{1Y}	(0.8+2L/1000)µm		
	E_{1Z}	(1.5+2L/1000)µm		
	E_{2XY}	(1.4+3L/1000)µm		
	$E_{U,MPE}$ (ISO10360-7:2011)	2.5+4L/1000, 2.5+4.5L/1000**		
	$P_{F2D,MPE}$ (ISO10360-7:2011)	1.7µm		
Magnification Change System		Programmable Power Turret (1x, 2x, 6x)		
Stage Glass Size		15.71" x 10.67" (399 x 271mm)	19.41" x 21.69" (493 x 551mm)	27.44" x 29.84" (697 x 758mm)
Maximum Stage Loading		44 lbs. (20kg)	88 lbs. (40kg)	110 lbs. (50kg)
Dimensions of Main Unit		37.44" x 33.82" x 41.06" (951 x 859 x 1043mm)	55.39" x 40.43" x 54.37" (1407 x 1027 x 1381mm)	78.15" x 51.54" x 61.81" (1985 x 1309 x 1570mm)
Mass of Main Unit (Including Machine Stand)		794 lbs. (360kg)	1276 lbs. (579kg)	3197 lbs. (1450kg)

*The measuring accuracy defined under the following conditions:
Programmable Power Turret: 2x Position; Objective Lens: 2.5x (HR or SL); L=Dimension between two arbitrary points (mm)
**Accuracy 2.5+4L/1000 for 20 ± 2°C, Accuracy 2.5+4.5L/1000 from 18 to 23°C

Mitutoyo

QV HYBRID TYPE1, TYPE4

SERIES 365 — CNC Vision Measuring System with Non-contact Displacement Sensor

FEATURES

The Quick Vision Hybrid is an advanced machine that allows vision measurement with both a CCD camera and high-speed scanning by applying a vision measurement unit in parallel with a non-contact displacement sensor.



Type 4 Displacement Sensor

QVH4 606

FEATURES: Hybrid Type1

- The focusing point method minimizes the difference in the measuring face reflectance and realizes high measurement reproducibility.
- The double pinhole method (less directivity) is employed as the measurement principle.



CLASS 1 LASER PRODUCT

Safety precautions regarding laser autofocus system (factory-installed option)

This product uses a low-power visible laser (690nm) for measurement. The laser is a CLASS 1 EN/IEC60825-1 (2007) device. A warning and explanation label, as shown above, is attached to the product as appropriate.

SPECIFICATIONS

Name			Quick Vision Hybrid 302		Quick Vision Hybrid 404		Quick Vision Hybrid 606	
Model No.			QVH Apex 302	QV Hyper 302	QVH Apex 404	QV Hyper 404	QVH Apex 606	QV Hyper 606
			QV Apex 302 (ISO10360-7)	QV Hyper 302 (ISO10360-7)	QVH Apex 404 (ISO10360-7)	QV Hyper 404 (ISO10360-7)	QVH Apex 606 (ISO10360-7)	QV Hyper 606 (ISO10360-7)
			QVH STREAM 302		QVH STREAM 404		QVH STREAM 606	
Measuring Range (XxYxZ)	Vision		11.81″ x 7.87″ x 7.87″ (300x200x200mm)		15.75″ x 15.75″ x 9.84″ (400x400x250mm)		23.62″ x 25.59″ x 9.84″ (600x650x250mm)	
	Non-contact Displacement Sensor	TYPE1	7.09″ x 7.87″ x 7.87″ (180×200×200mm)		11.02″ x 15.75″ x 9.84″ (280×400×250mm)		18.90″ x 25.59″ x 9.84″ (480×650×250mm)	
		TYPE4*1	6.92″ x 7.87″ x 7.87″ (176×200×200mm)		10.87″ x 15.75″ x 9.84″ (276×400×250mm)		18.74″ x 25.59″ x 9.84″ (476×650×250mm)	
Measuring Accuracy	(Vision)*2*3	E1X, E1Y	(1.5+3L/1000)µm	(0.8+2L/1000)µm	(1.5+3L/1000)µm	(0.8+2L/1000)µm	(1.5+3L/1000)µm	(0.8+2L/1000)µm
		E1Z	(1.5+4L/1000)µm	(1.5+2L/1000)µm	(1.5+4L/1000)µm	(1.5+2L/1000)µm	(1.5+4L/1000)µm	(1.5+2L/1000)µm
		E2XY	(2.0+4L/1000)µm	(1.4+3L/1000)µm	(2.0+4L/1000)µm	(1.4+3L/1000)µm	(2.0+4L/1000)µm	(1.4+3L/1000)µm
	(Displacement Sensor)*2*3	E1Z	(1.5+4L/1000)µm	(1.5+2L/1000)µm	(1.5+4L/1000)µm	(1.5+2L/1000)µm	(1.5+4L/1000)µm	(1.5+2L/1000)µm
	(ISO10360-7:2011)	$E_{U,MPE}$	3+5.5L/1000*4 3+6.0L/1000*5	2.5+4L/1000*4 2.5+4.5L/1000*5	3+5.5L/1000*4 3+6.0L/1000*5	2.5+4L/1000*4 2.5+4.5L/1000*5	3+5.5L/1000*4 3+6.0L/1000*5	2.5+4L/1000*4 2.5+4.5L/1000*5
		$P_{F2D,MPE}$	2.3µm	1.7µm	2.3µm	1.7µm	2.3µm	1.7µm
Scale Resolution			0.1µm	0.02µm	0.1µm	0.02µm	0.1µm	0.02µm
Max. Drive Speed		X/Y/Z Axis	300 mm/s	200 mm/s	300 mm/s	200 mm/s	300 mm/s	200 mm/s
Stage Glass Size			15.71″ x 10.67″ (399 x 271mm)		19.41″ x 10.67″ (493 x 551mm)		27.44″ x 29.84″ (697 x 758mm)	
Maximum Stage Loading			44 lbs. (20kg)		88 lbs. (40kg)		110 lbs. (50kg)	
Dimensions of Main Unit			37.44″ x 33.82″ x 41.06″ (951 x 859 x 1043mm)		55.39″ x 40.43″ x 54.37″ (1407 x 1027 x 1381mm)		78.15″ x 51.54″ x 61.81″ (1985 x 1309 x 1570mm)	
Mass of Main Unit (Including Machine Stand)			794 lbs. (360kg)		1276 lbs. (579kg)		3197 lbs. (1450kg)	

Name			Quick Vision ACCEL			
Model No.			QVH ACCEL808	QVH ACCEL 1010	QVH ACCEL 1212	QVH ACCEL 1517
Measuring Range (XxYxZ)	Vision		31.50x31.50x5.91″ (800x800x150mm)	39.37x39.37x5.91″ (1000x1000x150mm)	49.21x49.21x3.94″ (1250x1250x100mm)	59.06X68.90X3.94″ (1500x1750x100mm)
	Non-contact Displacement Sensor	TYPE1	26.77x31.50x5.91″ (680x800x150mm)	34.65x39.37x5.91″ (880x1000x150mm)	44.49X49.21X3.94″ (1130x1250x100mm)	54.33x68.90x3.94″ (1380x1750x100mm)
Measuring Accuracy	(Vision)*2*3	E1X, E1Y	(1.5+3L/1000)µm		(2.2+3L/1000)µm	
		E1Z	(1.5+4L/1000)µm		(2.5+5L/1000)µm	
		E2XY	(2.5+4L/1000)µm		(3.5+4L/1000)µm	
	(Displacement Sensor)*2*3	E1Z	(2.5+4L/1000)µm		(3.5+5L/1000)µm	
Scale Resolution			0.1µm			
Max. Drive Speed		X/Y Axis	400 mm/s		300 mm/s	
		Z Axis	150 mm/s		150 mm/s	
Stage Glass Size			34.76″x 37.72″ (883x958mm)	46.69″ x 46.69″ (1186x1186mm)	56.69″x56.69″ (1440x1440mm)	67.48″ x 77.48″ (1714x1968mm)
Maximum Stage Loading			22 lbs. (10kg)	66 lbs. (30kg)		
Dimensions of Main Unit			58.07″ x 73.23″ x 62.13″ (1475 x 1860 x 1578mm)	75.28″ x 84.29″ x 63.11″ (1912 x 2141 x 1603mm)	85.28″ x 93.31″ x 61.18″ (2166 x 2370 x 1554mm)	96.06″ x 114.09″ x 61.18″ (2440 x 2898 x 1554mm)
Mass of Main Unit			4519lbs. (2050kg)	6504 lbs. (2950kg)	7937 lbs. (3600kg)	9921 lbs. (4500kg)

Common Specifications	QV Apex	QV Hyper	QV Accel	QV Stream
CCD camera	Black & White			Black & White; Progressive Scanning
Magnification Change System	Programmable Power Turret (1x, 2x, 6x)			
Guide Method	Linear Motion Hard Bearing			
Illumination (Catalog Page Number Reference)	M-5	M-7	M-12	M-6

* Specification of QVH1 ACCEL

*1 TYPE 4 is not supported by QVH STREAM
*2 L = arbitrary measuring length (mm)
*3 Inspected by Mitutoyo standard
*4 Accuracy for 20 ± 2°C
*5 Accuracy from 18 to 23°C

FEATURES: Hybrid Type 4

- Enables detection of high inclination angles for both mirror and diffused surfaces.
- The automatic lighting adjustment function allows for high-accuracy measurements.
- Thickness measurement of thin and transparent objects such as film.

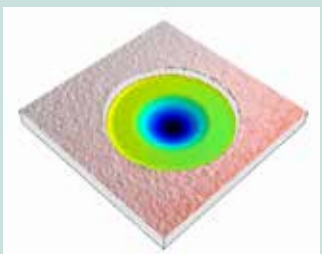
3-dimensional topographical result, data of plastic package by MCubeMAP

Quick Vision WLI

SERIES 363 — CNC Video Measuring System with White Light Interferometry



QV WLI 5x objective | QV WLI 10x objective | QV WLI 25x objective

- QV WLI can measure coordinates and dimensions and assess micro-3D forms without contact.
- High-accuracy, dual-head vision measuring system equipped with a white light interferometer.
- The white light interferometer uses a high aspect ratio to accurately measure shapes.
- The standard vision measuring function can continuously perform coordinate, dimension and 3D shape measuring.
- Large work stage accurately handles over-sized work pieces such as a PCB.

NEW-STYLE Vision Measuring Systems



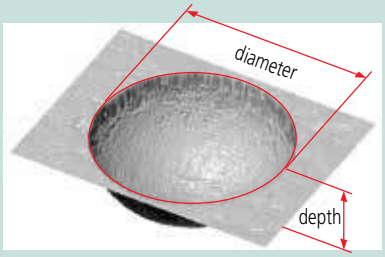

Application view of nano hole

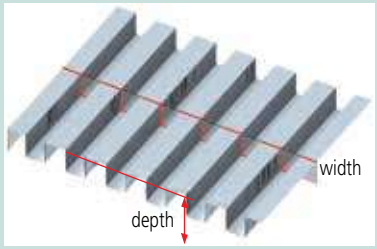

Application view of surface trace



QV - FORMPAK 2D analysis

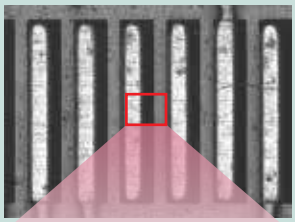

Region of interest evaluation

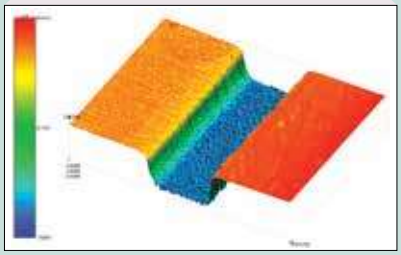

3-dimensional topographical result, data of micro-circuit

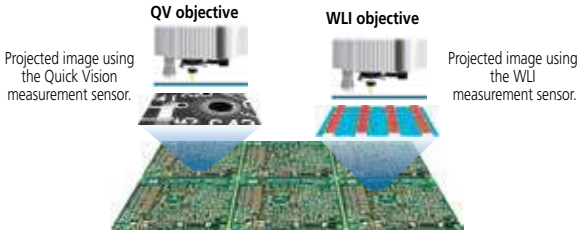

SPECIFICATIONS

Name		QV Hyper WLI 302	QV Hyper WLI 404	QV Hyper WLI 606
Model No.		**QV Hyper WLI 302 (ISO10360-7)**	**QV Hyper WLI 404 (ISO10360-7)**	**QV Hyper WLI 606 (ISO10360-7)**
Measuring Range (X×Y×Z)	Vision Measuring Area	11.81″ x 7.87″ x 7.48″ (300x200x190mm)	15.75″ x 1575″ x 9.45″ (400x400x240mm)	23.62″ x 25.59″ x 8.66″ (600x650x220mm)
	WLI Measuring Area*1	8.46″ x 7.87″ x 7.48″ (215x200x190mm)	12.40″ x 15.75″ x 9.44″ (315x400x240mm)	20.58″ x 25.59″ x 8.66″ (515x650x220mm)
WLI Optical Head Unit				
Field of View (H×V)		5X lens: approx. 0.64x0.48mm / 10X lens: approx. 0.32×0.24mm / 25X lens: approx. 0.13×0.10mm		
Illumination	Co-axial Light	Halogen		
Repeatability		2σ ≤ .08μm		
Z-axis Scanning Range*2		170μm		
Vision Optical Head Unit				
Magnification Change System		Programmable Power Turret (1X-2X-6X)		
Image Detection Method		B&W CCD camera		
Illumination	Co-axial Light	White LED		
	Transmitted Light	White LED		
	Programmable Ring Light	White LED		
Measuring Accuracy	E1X, E1Y	(0.8+2L/1000)μm		
	E1Z	(1.5+2L/1000)μm		
	E2XY	(1.4+3L/1000)μm		
	$E_{U,MPE}$ (ISO10360-7:2011)	2.5+4L/1000		
	$P_{F2D,MPE}$ (ISO10360-7:2011)	1.7μm		
Main Unit				
Resolution		0.01μm		
Max. Stage Loading		33 lbs. (15kg)	55 lbs. (25kg)	77 lbs. (35kg)
Guidance System		Linear Motion Hard Bearing		
Dimensions (W×D×H)		33.82″ x 37.40″ x 63.23″ (859x950x1606mm)	40.43″ x 55.39″ x 70.11″ (1027x1407x1781mm)	51.54″ x 78.15″ x 70.55″ (1309x1985x1792mm)
Mass (Vibration Isolator Stand Included)		Approx. 1080 lbs. (490kg)	Approx. 2557 lbs. (1160kg)	Approx. 2275 lbs. (1031kg)

*1: WLI head is moveable. Multiple fields of view can be stitched together.
*2: In standard mode. Applicable to max. 200μm by modifying scan pitch.

Mitutoyo

ULTRA QV

SERIES 363 — Ultra-high Accuracy CNC Vision Measuring System

FEATURES

- Minimizes straightness errors through the use of a precision air-bearing linear guide system.
- Utilizes a 0.01µm resolution glass scale manufactured at an ultra-precision facility located 11 meters underground.
- In order to minimize error caused by temperature fluctuations, the linear encoder scale is made of special crystallized glass with an expansion coefficient that is almost zero.
- Optimizes the mechanical structure of the main unit in Finite Element Method analysis.
- Stabilizes the geometrical accuracy (i.e. straightness of each axis and perpendicularity) to lessen thermal effects.



ULTRA QV404 PRO

SPECIFICATIONS

Model No.		QUICK VISION ULTRA 404 PRO QUICK VISION ULTRA 404 PRO (ISO10360-7:2011)	QUICK VISION ULTRA 404 PRO w/ TAF QUICK VISION ULTRA 404 PRO w/ TAF (ISO10360-7:2011)
Range	X x Y x Z	16″ x 16″ x 8″ (400x400x200mm)	
Magnification Change System		Programmable Power Turret (Selectable from Magnifications of 1X, 2X and 6X)	
Resolution / Scale Unit		0.01µm / Linear Encoder*4	
Resolution of Z-Scale Using TAF		–	0.25µm
High-sensitivity CCD Camera		B&W	
Illumination (PRL: Programmable Ring Light)	Surface	Halogen	
	Contour	Halogen	
	PRL	Halogen	
Accuracy*1 (20˚C±0.2˚C)	E1XY	(0.25+L/1000)µm	
	E1Z (50mm Stroke)*2	(1.0+2L/1000)µm	
	E1Z (Full Stroke)	(1.5+2L/1000)µm	
	E2XY Plane	(0.5+2L/1000)µm	
	$E_{U,MPE}$ (ISO10360-7:2011)	1.3+3L/1000, 1.3+3.5L/1000*5	
	$P_{F2D,MPE}$ (ISO10360-7:2011)	1.0µm	
Accuracy Assurance Environments*3	Temperature Range	20±0.2˚C	
	Temperature Variation	0.5˚C/1H	
	Temperature Gradient	1˚C/m	
Repeatability within the Visual Field		3σ=0.2µm	
Repeatability of Auto-focus		σ=0.4µm	
Stage Glass Size		19.4″ x 21.7″ (493x551mm)	
Max. Stage Loading		88lb (40kg)	
Dimensions (W x D x H)		46″ x 68″ x 75.2″ (1172x1735x1910mm)	
Mass		4464 lb (2025kg)	
Used Air Pressure		0.4MPa*6	
Supplied Air Flow Rate		150L/min*7	

*1: Accuracy when measured at the center of the video screen and in the middle of measuring stroke on a plane using the 5X objective and 1X tube lens
*2: Specified only for factory shipping inspection.
*3: Accuracy assurance environments in the case where no temperature compensation is performed. Those in the case where temperature compensation is performed are as follows.
– Accuracy-assured temperature range: 20±2˚C
– Temperature variation: 0.5˚C/H
– Temperature gradient: 1˚C/m
*4: Thermal expansion coefficient: (0±0.02)X10-6/K
*5: Accuracy 1.3+3L/1000 for 20 ± 2°C, Accuracy 1.3+3.50L/1000 from 18 to 23°C
*6: An air source is required to maintain the original air pressure between 0.5 and 0.9MPa.
*7: Indicates the flow rate under normal conditions.

Self-Suction Air Pad

If a normal air pad is used for the Y axis, it is necessary to increase the mass of the work stage to obtain appropriate rigidity. ULTRA QV (Quick Vision) employs a special air pad called a self-suction type that floats the air pad using compressed air and also generates an absorption power with a vacuum zone provided under negative pressure at the center of the pad. This achieves greater Y-axis rigidity and stage weight reduction concurrently, thus enabling stable stage drive.

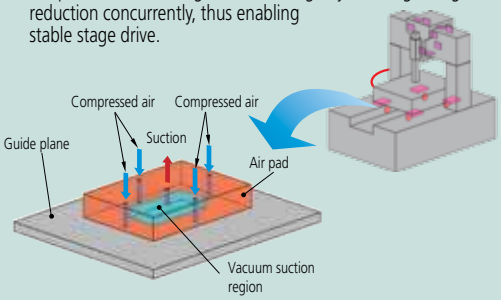

Ball Screw Floating Mechanism

ULTRA QV employs high-reliability ball screws in the floating mechanism. This floating mechanism will minimize the error due to axial fluctuation that adversely affects kinetic performance, such as straightness, and improves the driving speed.

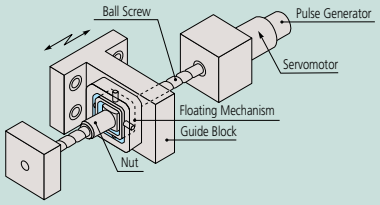



Ultra-high accuracy crystallized glass scale with virtually zero thermal expansion

The ULTRA Quick Vision is equipped with a crystallized glass scale having a resolution of 0.01µm and linear expansion coefficient of ±0.02x10^{-6}/K. Virtually zero thermal expansion means the ULTRA Quick Vision can minimize accuracy fluctuation resulting from thermal changes.

Tracking Auto Focus (TAF)

The TAF feature focuses continuously, adjusting to changes in the height of the object being measured. Automatic tracking of surface waves and warpage (in the Z axis) improves measurement throughput. The feature also cuts out the hassle of focusing during manual measurement and reduces the burden for the operator.

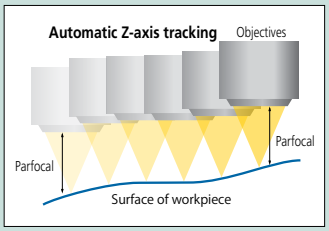

UMAP Vision System TYPE2

SERIES 364 — Micro-form Measuring System

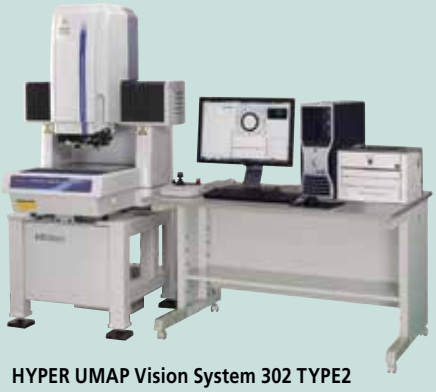

HYPER UMAP Vision System 302 TYPE2



ULTRA UMAP Vision System 404 TYPE2

FEATURES

- **Ultrasonic micro probe, UMAP**
  The ultrasonic micro probe (UMAP) has the ability to sense the amplitude variability in a micro area, and the optional contact points (15 to 300µm diameter) provide high-accuracy measurements to meet a variety of specifications.
- **High-accuracy contact and non-contact measurement capabilities in one system**
  This unit includes the UMAP and the non-contact type vision head. Until now, it was difficult to measure minute areas, but it is now possible to do both contact and non-contact measurement on a single platform.



Micro probe, UMAP

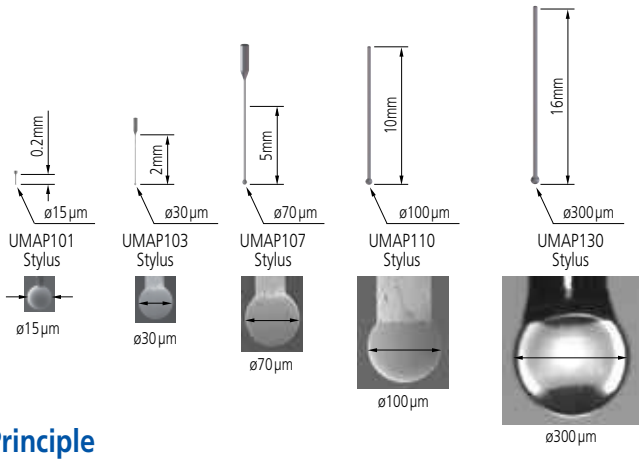

Application examples



Contour measurement of a ø0.125 hole

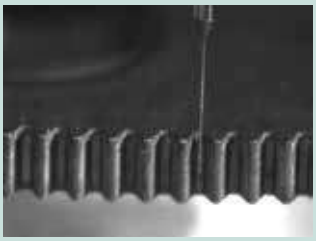

Measuring form of micro gear teeth

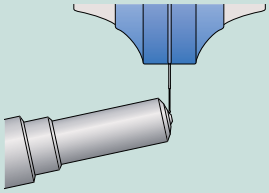

Measurement of a fuel injection nozzle hole's shape

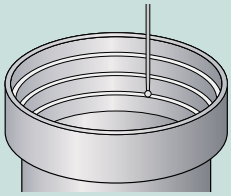

Measurement of a lens barrel's shape

Detection of Surface Principle

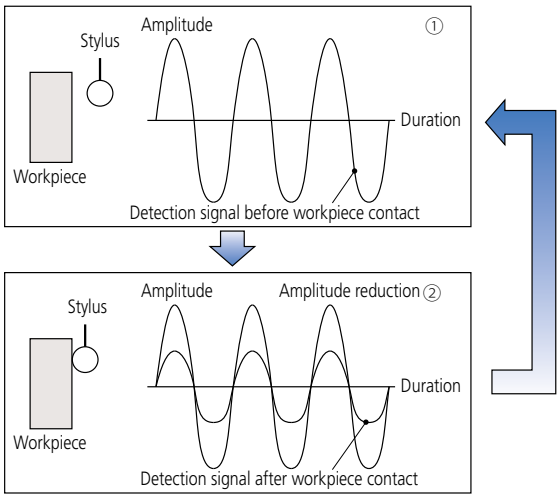

① In this drawing, the stylus is vibrating with a micro amplitude. When it does not come into contact with the workpiece, the vibration state is maintained.
② As the stylus comes into contact with the workpiece, the vibration amplitude decreases as the contact increases. When the decreasing amplitude falls below a certain level, a touch-trigger signal is generated.

SPECIFICATIONS

		TYPE2	
		Hyper UMAP302	**ULTRA UMAP404**
Measuring range (common to vision and UMAP)	X-axis × Y-axis	7.28 x 7.87" (185×200mm)	11.22 x 15.75" (285×400mm)
	Z-axis	6.89" (175mm): UMAP101/103 7.07" (180mm): UMAP107/110 7.28" (185mm): UMAP130	
Measuring accuracy (Vision)	E_{1X}, E_{1Y}	(0.8+2L/1000)µm	(0.25+L/1000)µm
	E_{1Z}	(1.5+2L/1000)µm	
Repeatability	UMAP 101/103/107	σ = 0.1µm	σ = 0.08µm
	UMAP 110/130	σ = 0.15µm	σ = 0.12µm

Mitutoyo

QV ACCEL

SERIES 363 — Large-format CNC Vision Measuring System

FEATURES

Moving-bridge type structure

Designed with primary focus on measurement efficiency, the machine drives the X and Y axes at 400mm/s (QV ACCEL808, ACCEL1010).

The moving-bridge type structure eliminates the need for a moving stage. This facilitates a more simplified design of the workpiece fixture, resulting in a significant reduction in the man-hours required for fixture fabrication and inspection.



QV ACCEL808PRO



QV ACCEL1212PRO

Image Multi-AutoFocus

The optimal focus can be selected for each surface texture and measured feature, providing high reproducibility and reliable edge detection.

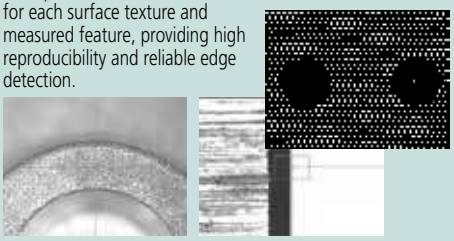

Surface focus　　Edge focus

Programmable Ring Light (PRL)

Fine control of obliquity and direction provides illumination optimal for measurement. Obliquity can be arbitrarily set in the range from 30° to 80°. This type of illumination is effective for enhancing the edge of inclined surfaces or very small steps. Illumination can be controlled independently in every direction, back and forth, right and left. Measurement with edge enhancement is possible by forming a shadow with lighting from only one direction.

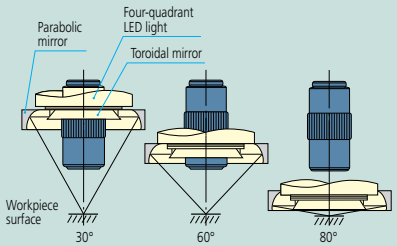

Tracking Auto Focus (TAF)

The TAF feature focuses continuously, adjusting to changes in the height of the object being measured. Automatic tracking of surface waves and warpage (in the Z axis) improves measurement throughput. The feature also removes the hassle of focusing during manual measurement.

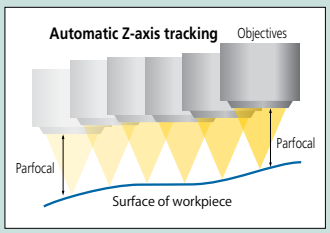

SPECIFICATIONS

Model No.		QV ACCEL808PRO	QV ACCEL1010PRO	QV ACCEL1212PRO	QV ACCEL1517PRO
Range	X-axis	32″ / 800mm	40″ / 1000mm	50″ / 1250mm	60″ / 1500mm
	Y-axis	32″ / 800mm	40″ / 1000mm	50″ / 1250mm	70″ / 1750mm
	Z-axis	6″ / 150mm	6″ / 150mm	4″ / 100mm	4″ / 100mm
Resolution		0.1µm			
Resolution of Z Scale using TAF		0.3µm			
High-sensitivity CCD camera		B&W			
Accuracy*	E1XY	(1.5+3L/1000)µm		(2.2+3L/1000)µm	
	E1Z	(1.5+4L/1000)µm		(2.5+5L/1000)µm	
	E2XY	(2.5+4L/1000)µm		(3.5+4L/1000)µm	
Max. Drive Speed	X/Y-axis	400mm/s		300mm/s	
	Z-axis	150mm/s		150mm/s	
Illumination (PRL: Programmable Ring Light)	Surface	LED, white			
	Contour	LED, white			
	PRL	LED, white (4 divisions)			
Magnification Change System		Programmable Power Turret (1X, 2x, 6x)			
Stage Glass Size		34.8″ x 37.7″ 883 x 958mm	46.7″ x 46.7″ 1186 x 1186mm	56.7″ x 56.7″ 1440 x 1440mm	67.5″ x 77.5″ 1714 x 1968mm
Dimensions (W x D x H)		58 x 67.5 x 62″ 1475x1716x1578mm	75.3 x 82 x 63″ 1912x2086x1603mm	85.3 x 92 x 61″ 2166x2340 x1554mm	96 x 113 x 61″ 2440 x 2868 x 1554mm
Max Stage Loading		22 lbs / 10kg	66.1 lbs / 30kg	66.1 lbs / 30kg	66.1 lbs / 30kg
Mass		5666 lbs / 2570kg	6504 lbs / 2950kg	7937 lbs / 3600kg	9921 lbs / 4500kg

* The measuring accuracy is defined at the following conditions, Programmable power turret: 1X, Objective lens: 2.5X (HR or SL), L = Dimension between two arbitrary points (mm)

Tracking Auto Focus (TAF)

AF principle	Objective Coaxial Autofocusing (Knife-edge method)				
Suitable Objectives	QV-HR1x	QV-SL1x	QV-HR2.5x	QV-SL2.5x	QV-5x
Tracking Range*2	6.3mm (±3.15mm)	6.3mm (±3.15mm)	1mm (±0.5 mm)	1mm (±0.5 mm)	0.25mm (±0.125mm)
Spot Diameter*3	5.2µm	8.0µm	2.1µm	3.1µm	1.5µm
Laser Source	Semiconductor laser (peak wavelength: 690nm)				
Laser Power	0.9mW				
Laser Safety	Class 2 (JIS C6802:2011, EN/IEC 60825-1:2007)				

*2 Varies according to workpiece surface texture and reflectance.
*3 Design values.

Quick Vision with Touch-Trigger Probe

QV3DCAD-Online

QV3DCAD-Online uses 3D CAD models to easily create QVPAK part programs. QV measurements can be performed by specifying an element in the CAD data. This improves program creation efficiency more than using a joystick to perform teaching.

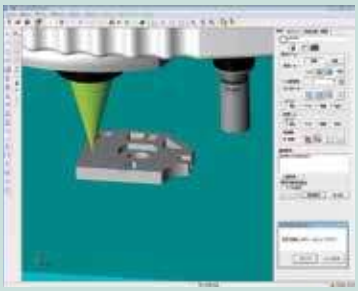

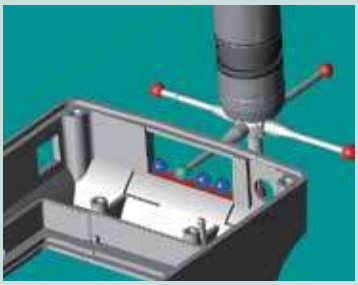

The interference check function can be used to prevent problems caused by the probe or objective lens colliding with the workpiece.

Non-contact and contact measurement with one machine

QV touch probe allows both vision measurement and touch-probe measurement.

3D workpiece measurement

Measures three-dimensional workpieces such as molded products, resin-molded products, machined products and more.

Module change rack available

Easily change between vision and touch-probe measurement with a module change rack.

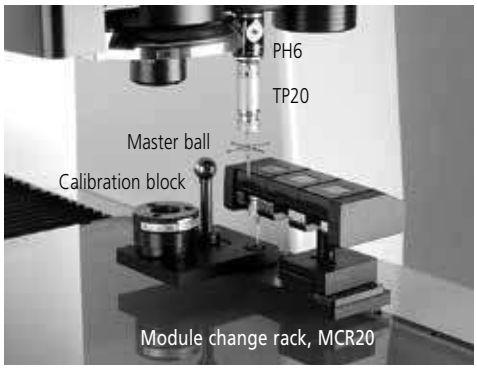

Module change rack, MCR20

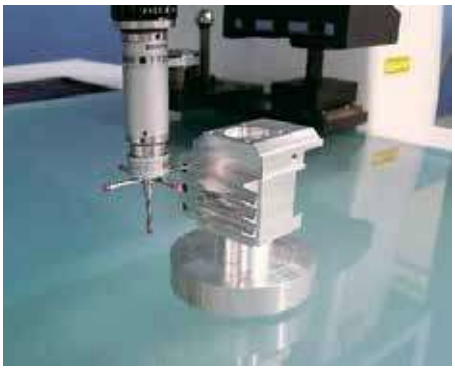

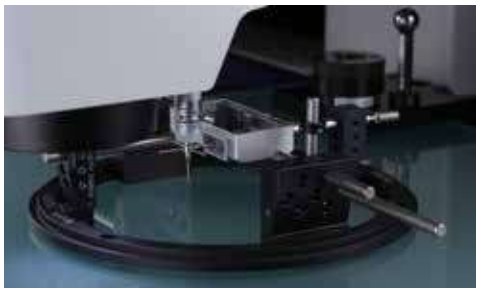

QV ACTIVE with optional Opti-fix clamping system

Supported CAD Formats

Format	Supported version
SAT	Up to version 25
IGES*	Up to version 5.3
STEP*	AP203 and AP214 (Geometry only)
Parasolid*	Version 10.0 to V26.0.151
SolidWorks*	SolidWorks 98 to 2006
Unigraphics*	V11 to V18 of Unigraphics and NX1 to NX9

*optional

Specifications with Touch-Probe Option

		QV TP Active 202	QV TP Active 404	QV TP Apex302 Hyper QV TP302	QV TP Apex404 Hyper QV TP404	QV TP Apex606 Hyper QV TP606
Measuring Range*1 (X×Y×Z)	Vision	250×200×150mm	400×400×200mm	300×200×200mm	400×400×250mm	600×650×250mm
	Touch Probe	131×200×150mm†	284×400×200mm	234×200×200mm	334×400×250mm	534×650×250mm
Measuring accuracy*2 (Touch Probe)	E_{1X}, E_{1Y}, E_{1Z}	(2.4+3L/1000)µm	(2.4 + 3L/1000)µm	QV TP Apex:(1.8+3L/1000)µm Hyper QV TP:(1.7+3L/1000)µm		

		QV TP ACCEL 808	QV TP ACCEL 1010	QV TP ACCEL 1212	QV TP ACCEL 1517
Measuring Range*1 (X×Y×Z)	Vision	800×800×150mm	1000×1000×150mm	1250×1250×100mm	1500×1750×100mm
	Touch Probe	734×800×150mm	934×1000×150mm	1184×1250×100mm	1434×1750×100mm
Measuring Accuracy*2 (Touch probe)	E_{1X}, E_{1Y}, E_{1Z}	(1.8+3L/1000)µm	(3+4L/1000)µm	(6+7L/1000)µm	

*1: When a module change rack, a master ball and a calibration ring are mounted, the measurement ranges are smaller than those in the table. Other specifications are the same as those of QV ELF, QV Apex, Hyper QV, and QV ACCEL. Please contact our sales office for more details.

*2: Inspected by Mitutoyo standard. L = length between two arbitrary points (mm)

† : With calibration ring removed.

Mitutoyo

Accessories for Quick Vision

Tracking Auto Focus (TAF)

The TAF feature focuses continuously, adjusting to changes in the height of the object being measured. Automatic tracking of surface waves and warpage (in the Z axis) improves measurement throughput. The feature eliminates the hassle of focusing during manual measurement.

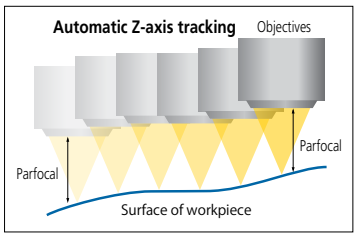

Tracking Auto Focus (TAF)

AF principle	Objective Coaxial Autofocusing (Knife-edge Method)				
Suitable Objectives	QV-HR1x	QV-SL1x	QV-HR2.5x	QV-SL2.5x	QV-5x
Tracking Range*2	6.3mm (±3.15mm)	6.3mm (±3.15mm)	1mm (±0.5 mm)	1mm (±0.5 mm)	0.25mm (±0.125mm)
Spot Diameter*3	5.2µm	8.0µm	2.1µm	3.1µm	1.5µm
Laser Source	Semiconductor laser (peak wavelength: 690nm)				
Laser Power	0.9mW				
Laser Safety	Class 2 (JIS C6802:2011, EN/IEC 60825-1:2007)				

*2 Varies according to workpiece surface texture and reflectance.
*3 Design values.

PFF (Points from Focus)

Mitutoyo-developed optical data collection method that stitches images together with high-resolution Z axis data.

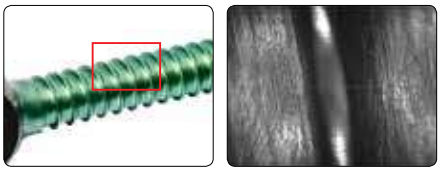

Measuring Bone Screw Thread

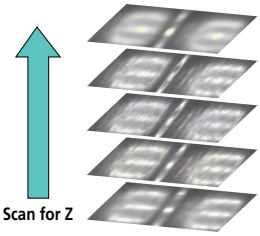

Acquire Continuously

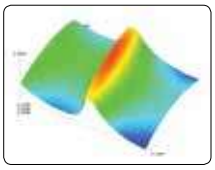

Form Data

Calibration Glass Chart No. 02AKN020 †

A calibration chart is used to compensate for the pixel size of the CCD chip, autofocus accuracy and the optical axis offset at each magnification of the variable magnification unit (PPT).



Compensation Chart No. 02AKU400*

A compensation chart is used to decrease optical distortion and errors caused by difference of the pattern and texture on the workpiece surface.



QV-Index Head*

Automatic multi-plane measurement is possible with the optional index table.



Max. workpiece diameter	5.51" / 140mm
Max. workpiece mass	4.41 lbs / 2kg
Min. rotation angle	0.1°
Positioning accuracy	±0.5°
Max. rotation speed	10rpm

Capable of Supporting ISO10360-7 Guaranteed Accuracy

Some models in the Quick Vision Series support the ISO10360-7 guaranteed accuracy specifications.

Contact Mitutoyo for details on applicable models.

Guaranteed accuracies

- Length measurement error $E_{U'MPE}$
- Probing error $P_{F2D'MPE}$

Length measurement error E

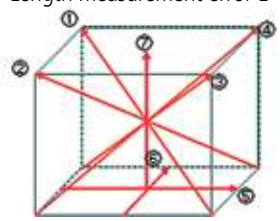

Objectives



Objective mag.	Turret lens mag.	Monitor mag.	Field of View
0.5X	1X	16X	12.54 x 9.40
	2X	32X	6.27 x 4.70
	6X	96X	2.09 x 1.56
1X	1X	32X	6.27 x 4.70
	2X	64X	3.13 x 2.35
	6X	192X	1.04 x 0.78
2.5X	1X	80X	2.50 x 1.88
	2X	160X	1.25 x 0.94
	6X	480X	0.41 x 0.31
5X	1X	160X	1.25 x 0.94
	2X	320X	0.62 x 0.47
	6X	960X	0.20 x 0.15
10X	1X	320X	0.62 x 0.47
	2X	640X	0.31 x 0.23
	6X	1920X	0.10 x 0.07
25X	1X	800X	0.25 x 0.18
	2X	1600X	0.12 x 0.09
	6X	4800X	0.04 x 0.03

Objective †

Objective	Order No.	Working Distance
QV-SL0.5X	**02AKT199**	30.5mm
QV-HR1X	**02AKT250**	40.6mm
QV-SL1X	**02ALA150**	52.5mm
QV-HR2.5X	**02AKT300**	40.6mm
QV-SL2.5X	**02ALA170**	60mm
QV-5X	**02ALA420**	33.5mm
QV-10XHR	**02AKT650**	20mm
QV-25X	**02ALG020**	13mm

The monitor magnification and field of view values are for the PRO machine.
QV-10X, QV-25X: Depending on a workpiece of illumination may be insufficient at a turret lens magnification of 2X and 6X.
QV-25X: The PRL illumination is restricted in its usable position.

Multi-Function Control Box

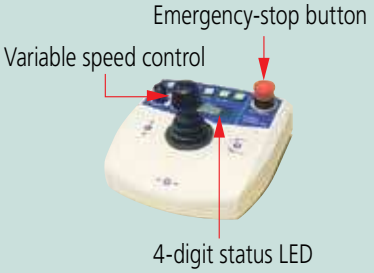

OPTI-FIX Kits

Modular Clamping System for Vision Measuring Systems

The modular opti-fix clamping system has been developed specifically for optical coordinate measuring systems.

Opti-fix guarantees safe part fixturing during measurement. This functional configuration also makes multiple part measurements considerably easier.

In order to reduce errant reflections of lighting systems and ambient light effects to a minimum, all important construction elements are anodized in flat-black or matte finish.

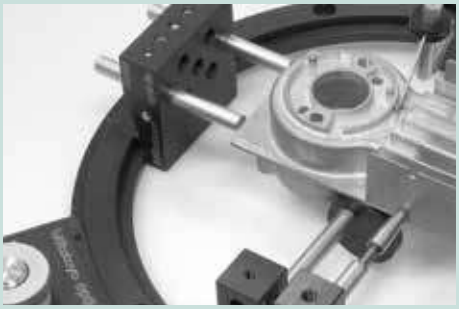

For mounting workpieces on the glass stage, different fixturing methods are available.

In the case of measuring methods using reflected, as well as transmitted light, for measurement of cubic, rotationally symmetrical and flat workpieces, the use of Opti-fix is a practical solution.

Furthermore, the spring clips and centering pins are integrated into the system to allow for tactile measuring. Opti-fix offers a large number of configurations for part fixturing, from clamping tweezers for miniature parts to a precision vice for large parts.

Fastening brackets, vacuum plates or magnetic holders for mounting the clamping system on the measuring machine, can be ordered separately.

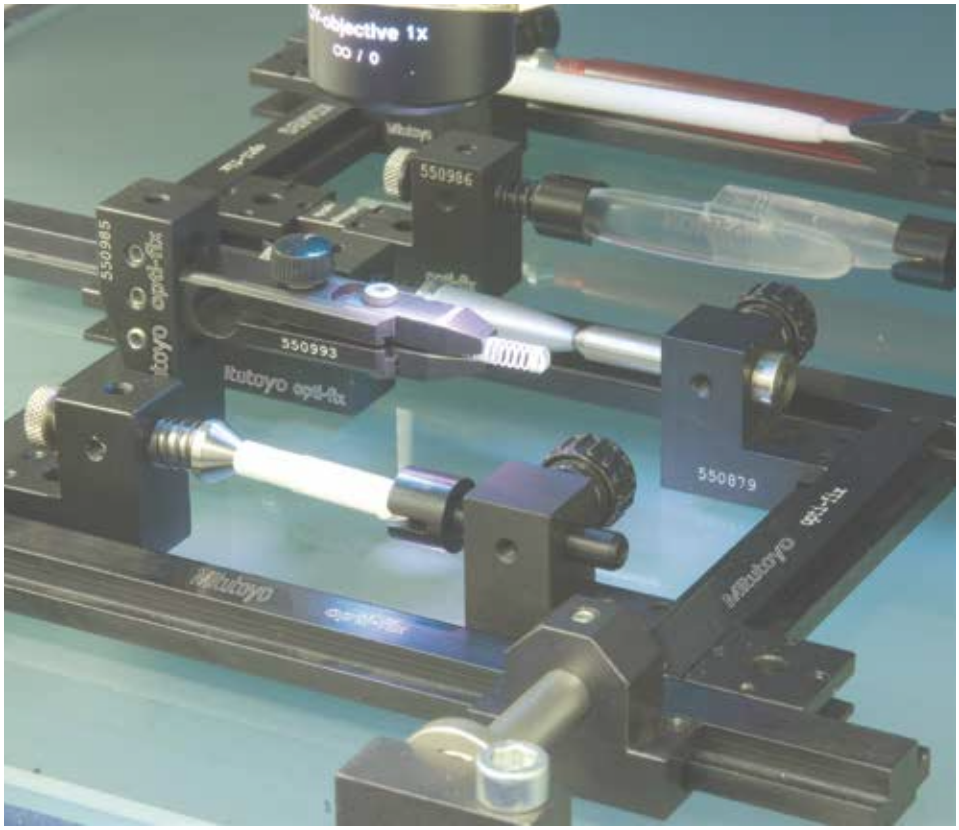

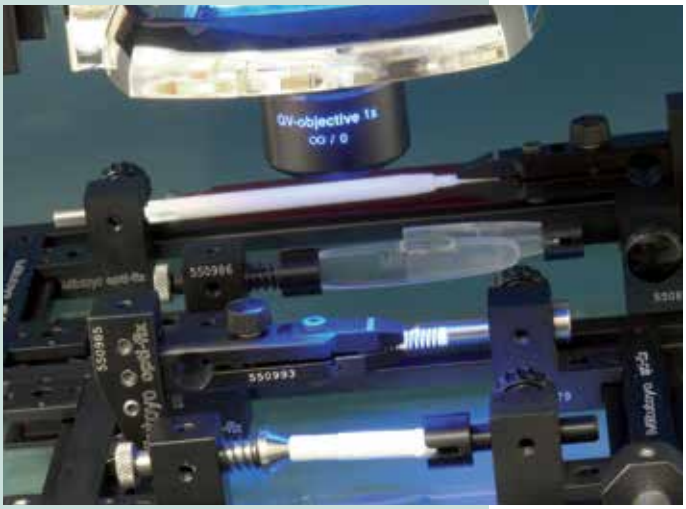

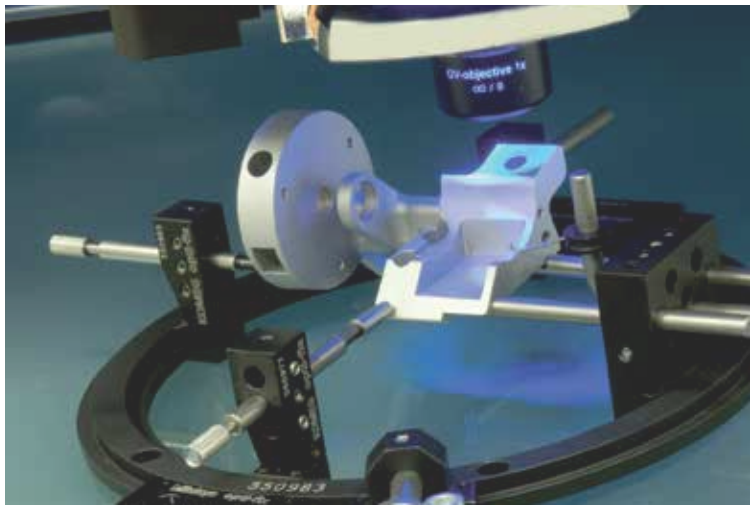

Mitutoyo

OPTI-FIX Kits

Opti-Set Start



K551056



For construction of a simple rail system with a length of 250 mm and for fixturing parts with simple part geometry. 16 parts.

Opti-Set Basic



K551057

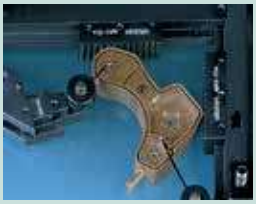



For construction of a basic frame with the dimensions of 200 mm x 100 mm and for fixturing parts with simple part geometry. 26 parts.

Opti-Set Rotation



K551058



For construction of a basic frame with the dimensions of 250 mm x 200 mm and for fixturing parts that are rotationally symmetric with and without center holes. 23 parts.

OPTI-FIX Kits

Opti-Set Advanced

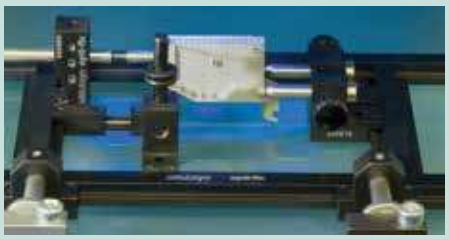



K551059

For construction of a basic frame with the dimensions of 400 mm x 250 mm and for fixturing parts with slightly more complex part geometry. 51 parts.

Opti-Set Professional

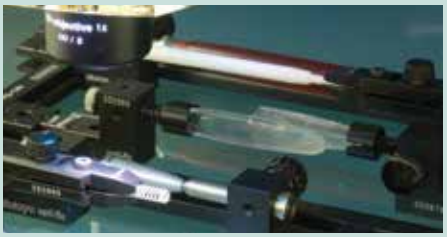



K551060

For construction of a basic frame with the dimensions of 400 mm x 250 mm and for fixturing parts with complex part geometry. The fixturing of parts with a rotational part geometry is also available. 115 parts.

Opti-Set Round





K550298

With locating and clamping elements, included adaptor plates for adaptation to the basic frame of the rail system. 18 parts.

Mitutoyo

Vision Measurement

Vision measuring machines provide the following processing capabilities.

Edge detection

Detecting/measuring edges in the XY plane



Auto focusing

Focusing and Z measurement



Pattern recognition

Alignment, positioning, and checking the presence of a feature

Image Storage

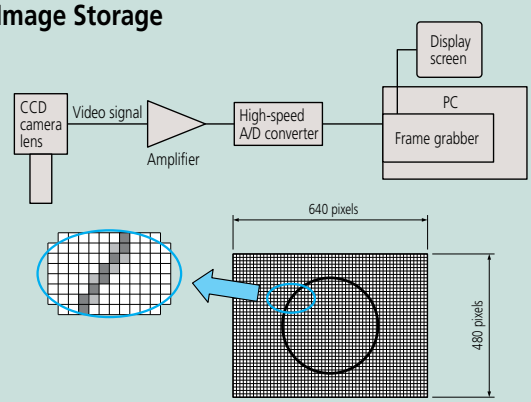

An image is comprised of a regular array of pixels, similar to the process that produces a printed image picture on fine plotting paper with each square solid-filled.

Gray Scale

A PC stores an image after internally converting it to numeric values. A numeric value is assigned to each pixel of an image. Image quality varies depending on how many levels of gray scale are defined by the numeric values. The PC provides two types of gray scale: two-level and multi-level. The pixels in an image are usually displayed as the 256-level gray scale.

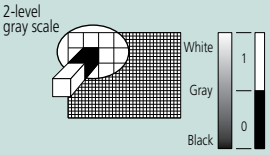

Pixels in an image brighter than a given level are displayed as white and all other pixels are displayed as black.

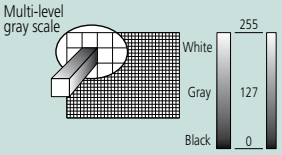

Each pixel is displayed as one of 256 levels between black and white. This allows high-fidelity images to be displayed.

Difference in Image Quality

Difference between 2-level and 256-level gray-scale images



Sample image displayed in 2-level gray scale

Sample image displayed in 256-level gray scale

Variation in Image Depending on Threshold Level



These three pictures are the same image displayed as 2-level gray scale at different slice levels (threshold levels). In a 2-level gray-scale image, different images are provided as shown above due to a difference in slice level. Therefore, the 2-level gray scale is not used for high-precision vision measurement since numeric values will change depending on the threshold level that is set.

Dimensional Measurement

An image consists of pixels. If the number of pixels in a section to be measured is counted and multiplied by the size of a pixel, then the section can be converted to a numeric value in length. For example, assume that the total number of pixels in the lateral size of a square workpiece is 300 pixels as shown in the figure below. If a pixel size is 10μm under a specific imaging magnification, the total length of the workpiece is given by 10μm x 300 pixels = 3000μm = 3mm.

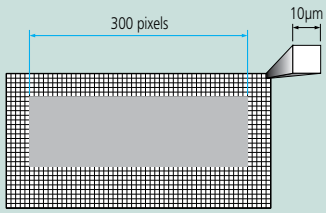

Edge Detection

How to detect a workpiece edge in an image is described using the following monochrome picture as an example. Edge detection is performed within a given domain. A symbol that visually defines this domain is referred to as a tool. Multiple tools are provided to suit various workpiece geometries or measurement data.

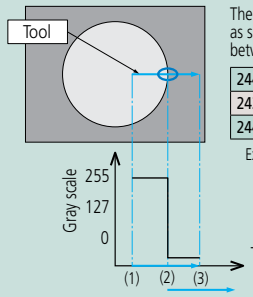

The edge-detection system scans within the tool area as shown in the figure at left and detects the boundary between light and shade.

244	241	220	193	97	76	67	52	53	53
243	242	220	195	94	73	66	54	53	55
244	246	220	195	94	75	64	56	51	50

Example of numeric values assigned to pixels on the tool

(1) Scan start position
(2) Edge detection position
(3) Scan end position

High-resolution Measurement

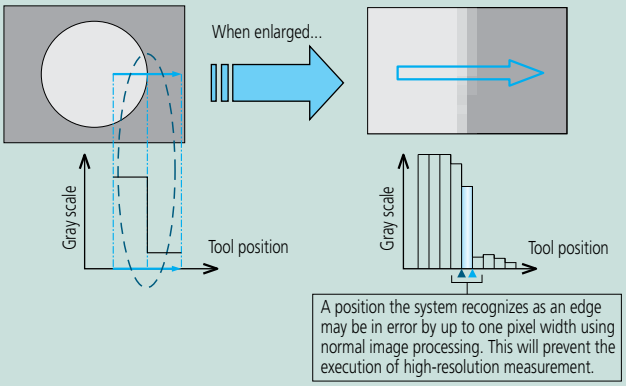

To increase the accuracy in edge detection, sub-pixel image processing is used.
An edge is detected by determining an interpolation curve from adjacent pixel data as shown below.
As a result, it allows measurement with a resolution higher than 1 pixel.

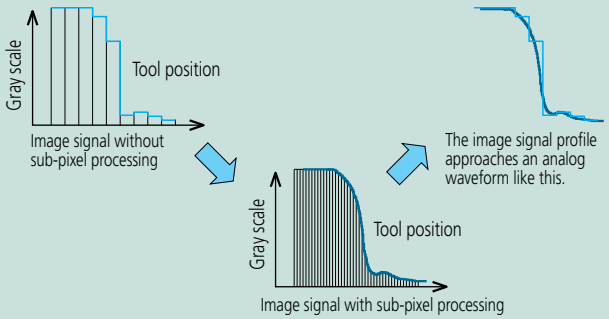

Measurement along Multiple Portions of an Image

Large features that cannot be contained on one screen have to be measured by precisely controlling the position of the CCD sensor and stage so as to locate each reference point within individual images. By this means, the system can measure even a large circle, as shown below, by detecting the edge while moving the stage across various parts of the periphery.

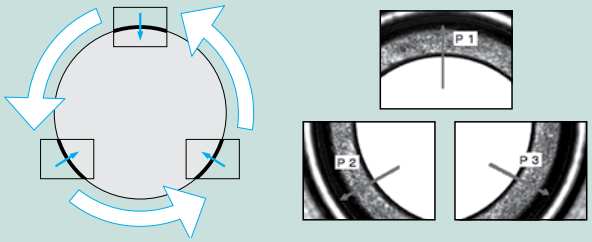

Composite Coordinates of a Point

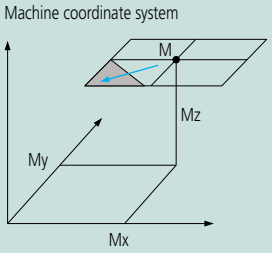

Measuring machine stage position
M = (Mx, My, Mz)

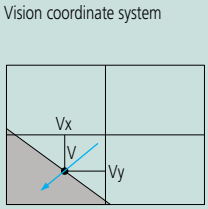

Detected edge position (from the center of vision)
V = (Vx, Vy)

Actual coordinates are given by X = (Mx + Vx), Y = (My + Vy), and Z = Mz, respectively.

Since measurement is performed while individual measured positions are stored, the system can measure dimensions that cannot be included in one screen.

Principle of Auto Focusing

The system can perform XY-plane measurement, but cannot perform height measurement using only the CCD camera image. The system is commonly provided with the Auto Focus (AF) mechanism for height measurement. The following explains the AF mechanism that uses a common image, although some systems may use an AF laser.

The AF system analyzes an image while moving the CCD in the Z axis. In the analysis of image contrast, an image in sharp focus will show a peak contrast and one out of focus will show a low contrast. Therefore, the height at which the image contrast peaks is the just-in-focus height.

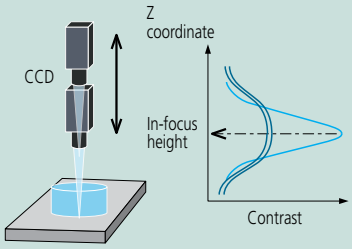

Variation in Contrast Depending on the Focus Condition

Edge contrast is low due to out-of-focus edges.

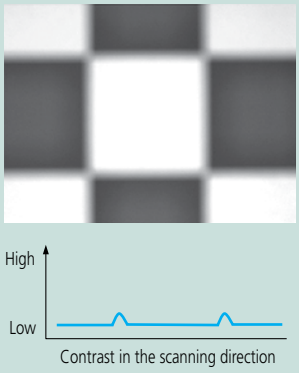

Edge contrast is high due to sharp, in-focus edges.

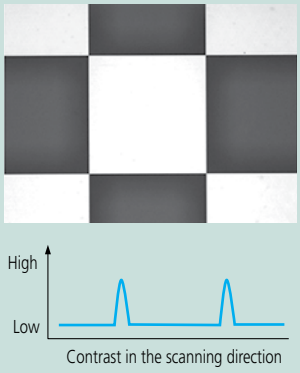

Notices and Disclaimers

Warranties

Mitutoyo America Corporation warrants all of its products sold and shipped in the United States and Canada for one year from the date of shipment to the original purchaser. The description as shown below is not a warranty by itself and is for general information only. For warranty terms and conditions as they pertain to a specific product, contact the Mitutoyo America Corporation service center.

Mitutoyo America Corporation warrants the products and software it manufactures and sells directly or through an authorized distributor, if the product or software is in the possession of the original purchaser. Except for software, Mitutoyo America Corporation will, at its option, repair or replace any part or parts, which upon examination, are found to be defective in workmanship or material, provided the product is returned to Mitutoyo America Corporation and the purchaser can prove that the product has been used and maintained and, where applicable, installed in accordance with Mitutoyo America Corporation instructions and has not been subject to abuse. For software, Mitutoyo America Corporation will replace defective media or make a warranted program operate or replace the program with a functionally equivalent program as warranted, provided there is satisfactory documentation that the software has been installed, used and maintained in accordance with Mitutoyo America Corporation instructions in the User Manual and provided further that the customer can satisfactorily show that a defect exists.

Mitutoyo America Corporation does not accept liability or responsibility for repairs, additions, or modifications made to the product, including those made by others, without Mitutoyo America Corporation's written consent.

The warranties Mitutoyo America Corporation provides do not adversely affect Mitutoyo America Corporation's right to modify or change the design of products, without notice, including any of its specifications or materials.

Export Compliance

All products in this catalog are subject to the Foreign Exchange and Foreign Trade Control laws of Japan, US Export Administration Regulations (EAR) or the Canadian Export and Import Permits Act. Re-export or relocation of any of these products may require prior approval by an appropriate governing authority. If a purchased product is exported or re-exported, even if it is not considered a regulated item by a governing authority, Mitutoyo would like to be made aware, as the customer service available for that product may be affected. If you have any questions, please consult your local Mitutoyo sales office.

Safety Caution

Carefully read the specifications and functions in this catalog before selecting products.
Safety may be compromised if you use products for purposes other than those stated here.
Feel free to contact your nearest Mitutoyo sales center if you wish to use a product for other purposes or in a special environment.

Appearance and Specifications

Appearance and specifications are subject to change without prior notice for product improvement.
The product names in this catalog are registered trademarks or trademarks of Mitutoyo or their respective companies.

APPLICATIONS INDEX

STANDARDS

	Page
Bore Gage Checker	C-29
CERA Caliper Checker	D-49
Check Master	E-29
Depth Micro Checker	D-51
Gage Blocks	E-2- E-19
Height Master	E-25
High-Precision Squares	E-33
Inside Micro Checker	C-19
Micrometer Stands	B-48
Optical Flats	B-50
Optical Parallels	B-50
Setting Rings	C-29 - C-30
Square Master	E-31
Standard Scales	E-32
Universal Height Master	E-28
Working Standard Scales	E-32

MEASUREMENT OF INSIDE DIMENSIONS

	Page
■ ONE-DIMENSIONAL	
ABSOLUTE Digimatic Bore Gage	C-27
ABSOLUTE Digimatic Calipers	D-2 -D-7, D-15, D-17-D-31
Bore Gages	C-20 - C-26, C-28
Borematic	C-8 - C-9
Dial Caliper Gages	F-56 - F-58
Dial Calipers	D-8 - D-9
Digimatic Holtest	C-2 - C-3
Groove Micrometers	B-46
Holtest	C-4 - C-5
Inside Micro Checker	C-19
Inside Micrometers	C-13, C-18
Small-Hole Gage Set	B-47
Telescoping Gage Set	B-47
Vernier Calipers	D-10 - D-14
■ TWO-DIMENSIONAL	
Measuring Microscopes	I-15 - I-20
Profile Projectors	I-2 - I-11
QM-Data200	I-23 - I-24
Quick Image Series	M-3
Toolmakers' Microscopes	I-14
Vision Unit	I-25
■ THREE-DIMENSIONAL	
Coordinate Measuring Machines (CMM)	L-3 - L-15
Micro-Form Measuring System	M-11
Quick Scope Series	M-2
Quick Vision Series	M-4 - M-12

MEASUREMENT OF OUTSIDE DIMENSIONS

	Page
■ ONE-DIMENSIONAL	
Calipers	D-2 - D-32
Dial Caliper Gages	F-56 - F-58
Dial Snap Gages	F-60
Dial Thickness Gages	F-51 - F-52
Digimatic Micrometers	B-2 - B-8, B-15, B-18, B-20 - B-24, B-27 - B-36, B-38
Digimatic Thickness Gages	F-50 - F-52
Digit Outside Micrometers	B-42
Litematic	G-27
Litematic Head	G-27
Outside Micrometers	B-11 - B-19
Quickmike	B-8
Steel Rules	E-35 - E-36
Working Standard Scales	E-32
■ TWO-DIMENSIONAL	
Measuring Microscopes	I-15 - I-20
Profile Projectors	I-2 - I-11
QM-Data200	I-23 - I-24
Quick Image Series	M-3
Toolmakers' Microscopes	I-14
Vision Unit	I-25
■ THREE-DIMENSIONAL	
Coordinate Measuring Machines (CMM)	L-3 - L-15
Micro-Form Measuring System	M-11
Quick Scope Series	M-2
Quick Vision Series	M-4 - M-12

ANGLE MEASUREMENT

	Page
■ ONE-DIMENSIONAL	
Bevel Protractor	E-39
Digital Universal Protractor	E-42
Universal Bevel Protractor	E-39
■ TWO-DIMENSIONAL	
Measuring Microscopes	I-15 - I-20
Profile Projectors	I-2 - I-11
QM-Data200	I-23 - I-24
Quick Image Series	M-3
Toolmakers' Microscopes	I-14
Vision Unit	I-25
■ THREE-DIMENSIONAL	
Coordinate Measuring Machines (CMM)	L-3 - L-15
Micro-Form Measuring System	M-11
Quick Scope Series	M-2
Quick Vision Series	M-4 - M-12

Mitutoyo

APPLICATIONS INDEX

DEPTH MEASUREMENT

	Page
■ ONE-DIMENSIONAL	
ABSOLUTE Digimatic Calipers	D-2 -D-7, D-15, D-17-D-31
ABSOLUTE Digimatic Depth Gages	D-52, D-55
Depth Base Attachment (Vernier Caliper)	D-33
Depth Micrometers	D-50 - D-51
Dial Calipers	D-8 - D-9
Dial Depth Gage	D-56 - D-58
Digimatic Depth Micrometers	D-50
Extension Bases (Optional Accessory for Depth Gage)	D-56
Vernier Calipers	D-14, D-10,11, D-12, D-13
Vernier Depth Gages	D-54 - D-55
■ TWO-DIMENSIONAL	
Linear Height	D-36 - D-37
Measuring Microscope	I-15 - I-20
Vision Unit	I-25
■ THREE-DIMENSIONAL	
Coordinate Measuring Machines (CMM)	L-3 - L-15
Micro-Form Measuring System	M-11
Quick Vision Series	M-4 - M-12

HEIGHT MEASUREMENT

	Page
■ ONE-DIMENSIONAL	
Black Granite Surface Plates	E-45
Dial Height Gages	D-42
Digimatic Height Gages	D-40 - D-41, D-43 - D-44
Height Master	E-25
QM-Height	D-38 - D-39
Universal Height Master	E-28
Vernier Height Gages	D-45 - D-46
■ TWO-DIMENSIONAL	
Linear Height	D-36 - D-37
Measuring Microscopes	I-15 - I-20
Vision Unit	I-25
■ THREE-DIMENSIONAL	
Coordinate Measuring Machines (CMM)	L-3 - L-15
Micro-Form Measuring System	M-11
Quick Scope Series	M-2
Quick Vision Series	M-4 - M-12

MEASUREMENT OF COMPLEX 3D PARTS

	Page
■ THREE-DIMENSIONAL	
Coordinate Measuring Machines (CMM)	L-3 - L-15
Micro-Form Measuring System	M-11
Quick Scope Series	M-2
Quick Vision Series	M-4 - M-12

COMPARISON MEASUREMENT

	Page
■ ONE-DIMENSIONAL	
ABSOLUTE Digimatic Calipers	D-2 -D-7, D-15, D-17-D-31
Bore Gages	C-20 - C-26, C-28
Borematic	C-8 - C-9
Calibration Tester	F-49
Comparator Stands	F-65
Dial Gage Stands	F-62
Dial Indicators	F-15 - F-32
Dial Snap Gages	F-60
Dial Snap Meters	B-44
Dial Test Indicators	F-40 - F-46
Digimatic Height Gages	D-40 - D-41, D-43 - D-44
Digimatic Holtest	C-2 - C-3
Digimatic Indicators	F-2 - F-13
Digimatic Micrometers	B-2 - B-8, B-15, B-18, B-20 - B-24, B-27 - B-36, B-38
Gage Block Comparator	E-24
Gage Blocks	E-2- E-19
Height Master	E-25
Indicating Micrometers	B-43
Laser Scan Micrometers	G-36 - G-45
Linear Gages	G-4 - G-18
Litematic	G-27
Litematic Head	G-27
Mu-Checker (In-Process Measurement)	G-30 - G-33
QM-Height	D-38 - D-39
Telescoping Gage Set	B-47
■ TWO-DIMENSIONAL	
Linear Height	D-36 - D-37
Measuring Microscopes	I-15 - I-20
Profile Projectors	I-2 - I-11
QM-Data200	I-23 - I-24
Quick Image Series	M-3
Toolmakers' Microscopes	I-14
Vision Unit	I-25
■ THREE-DIMENSIONAL	
Coordinate Measuring Machines (CMM)	L-3 - L-15
Micro-Form Measuring System	M-11
Quick Vision Series	M-4 - M-12

STEP MEASUREMENT

	Page
■ ONE-DIMENSIONAL	
ABSOLUTE Digimatic Calipers	D-2 -D-7, D-15, D-17-D-31
Dial Calipers	D-8 - D-9
Dial Height Gages	D-42
Dial Indicators	F-15 - F-32
Dial Test Indicators	F-40 - F-46
Digimatic Height Gages	D-40 - D-41, D-43 - D-44
Digimatic Indicators	F-2 - F-13
Linear Gages	G-4 - G-18
Mu-Checker (In-Process Measurement)	G-30 - G-33
QM-Height	D-38 - D-39
Uni-Mike	B-29
Vernier Calipers	D-10 -D-14
Vernier Height Gages	D-45 - D-46
■ TWO-DIMENSIONAL	
Linear Height	D-36 - D-37
■ THREE-DIMENSIONAL	
Coordinate Measuring Machines (CMM)	L-3 - L-15
Micro-Form Measuring System	M-11
Quick Scope Series	M-2
Quick Vision Series	M-4 - M-12

MEASUREMENT OF ELASTIC PARTS

	Page
■ ONE-DIMENSIONAL	
ABSOLUTE Low Force Caliper	D-28
Litematic	G-27
Litematic Head	G-27
■ TWO-DIMENSIONAL	
Measuring Microscopes	I-15 - I-20
Profile Projectors	I-2 - I-11
Quick Image Series	M-3
Toolmakers' Microscopes	I-14
■ THREE-DIMENSIONAL	
Coordinate Measuring Machines (CMM)	L-3 - L-15
Micro-Form Measuring System	M-11
Quick Scope Series	M-2
Quick Vision Series	M-4 - M-12

MEASUREMENT OF SHEET METALS

	Page
Laser Scan Micrometers	G-36 - G-45
Sheet Metal Micrometers	B-30

NON-CONTACT MEASUREMENT

	Page
■ ONE-DIMENSIONAL	
Laser Scan Micrometers	G-36 - G-45
■ TWO-DIMENSIONAL	
Measuring Microscopes	I-15 - I-20
Profile Projectors	I-2 - I-11
Toolmakers' Microscopes	I-14
■ THREE-DIMENSIONAL	
Micro-Form Measuring System	M-11
Quick Scope Series	M-2
Quick Vision Series	M-4 - M-12

MULTI-POINT MEASUREMENT

	Page
Dial Indicators	F-15 - F-32
Digimatic Indicators	F-2 - F-13
Linear Gage Counter (EC, EG, EB, EV)	G-20 - G-23
Linear Gages	G-4 - G-18
Mu-Checker	G-30 - G-33

MEASURING INSTRUMENTS TO BE USED AS SENSORS

	Page
2D Image Correlation Encoder	H-18
ABSOLUTE Digimatic Scale Units	H-2 - H-5
Dial Indicators	F-15 - F-32
Dial Test Indicators	F-40 - F-46
Digimatic Indicators	F-2 - F-13
Laser Scan Micrometers	G-36 - G-45
Linear Gages	G-4 - G-18
Linear Scale	H-10 - H-32
Mu-Checker (In-Process Measurement)	G-30 - G-33

MEASUREMENT OF FORM (SURFACE ROUGHNESS, ROUNDNESS), SQUARENESS, AND PARALLELISM

	Page
Bench Centers	E-44
Black Granite Surface Plates	E-45
Contracer	J-28 - J-31
Coordinate Measuring Machines (CMM)	L-3 - L-15
Dial Test Indicators	F-40 - F-46
Formtracer	J-14 - J-21
High-Precision Squares	E-33
Mu-Checker (Use Together with Height Gages, etc.)	G-30 - G-33
Optical Flats	B-50
Optical Parallels	B-50
Precision Levels	E-37
Roundtest	J-39 - J-46
Square Master	E-32
Surftest	J-2 - J-13

APPLICATIONS INDEX

MEASUREMENT OF CENTER-TO-CENTER DISTANCES

	Page
■ ONE-DIMENSIONAL	
ABSOLUTE Digimatic and Vernier Calipers (Offset)	D-15
Black Granite Surface Plates	E-45
QM-Height	D-38 - D-39
■ TWO-DIMENSIONAL	
Linear Height	D-36 - D-37
Measuring Microscopes	I-15 - I-20
Profile Projectors	I-2 - I-11
QM-Data200	I-23 - I-24
Quick Image Series	M-3
Toolmakers' Microscopes	I-14
Vision Unit	I-25
■ THREE-DIMENSIONAL	
Coordinate Measuring Machines (CMM)	L-3 - L-15
Micro-Form Measuring System	M-11
Quick Scope Series	M-2
Quick Vision Series	M-4 - M-12

SCREW THREAD MEASUREMENT

	Page
■ ONE-DIMENSIONAL	
3-Wire Units	B-39
Digimatic Micrometers	B-2 - B-8, B-15, B-18, B-20 - B-24, B-27 - B-36, B-38
Digit Outside Micrometers	B-42
Outside Micrometers	B-11 - B-19
Point Micrometers	B-21
Screw Thread Micrometers	B-37 - B-38
Thread Pitch Gages	E-40
V-Anvil Micrometers	B-23 - B-24
■ TWO-DIMENSIONAL	
Contracer	J-28 - J-31
Measuring Microscopes	I-15 - I-20
Profile Projectors	I-2 - I-11
QM-Data200	I-23 - I-24
Quick Image Series	M-3
Toolmakers' Microscopes	I-14
Vision Unit	I-25
■ THREE-DIMENSIONAL	
Coordinate Measuring Machines (CMM)	L-3 - L-15
Micro-Form Measuring System	M-11
Quick Scope Series	M-2
Quick Vision Series	M-4 - M-12

MEASUREMENT OF GEARS

	Page
■ ONE-DIMENSIONAL	
Disk Micrometers	B-32 - B-35
Gear Tooth Micrometers	B-36
■ TWO-DIMENSIONAL	
Measuring Microscopes	I-15 - I-20
Profile Projectors	I-2 - I-11
QM-Data200	I-23 - I-24
Quick Image Series	M-3
Toolmakers' Microscopes	I-14
Vision Unit	I-25
■ THREE-DIMENSIONAL	
Coordinate Measuring Machines (CMM)	L-3 - L-15
Micro-Form Measuring System	M-11
Quick Scope Series	M-2
Quick Vision Series	M-4 - M-12

HARDNESS MEASUREMENT

	Page
Durometers	K-13 - K-15
Hardness Testing Machines	K-3 - K-10

MEASUREMENT ASSOCIATED WITH SEMICONDUCTOR/LCD FABRICATION

	Page
■ ONE-DIMENSIONAL	
ABSOLUTE Digimatic Calipers	D-2 -D-7, D-15, D-17-D-31
Dial Calipers	D-8 - D-9
Dial Indicators	F-15 - F-32
Dial Test Indicators	F-40 - F-46
Digimatic Indicators	F-2 - F-13
Digimatic Micrometers	B-2 - B-8, B-15, B-18, B-20 - B-24, B-27 - B-36, B-38
Digit Outside Micrometers	B-42
Linear Gages	G-4 - G-18
Litematic	G-27
Mu-Checker	G-30 - G-33
Outside Micrometers	B-11 - B-19
Vernier Calipers	D-10 - D-14
■ TWO-DIMENSIONAL	
FS Objective Lens	I-28 - I-32
FS-70 Series	I-26
Measuring Microscopes	I-15 - I-20
Profile Projectors	I-2 - I-11
QM-Data200	I-23 - I-24
Quick Image Series	M-3
Toolmakers' Microscopes	I-14
Vision Unit	I-25
VMU	J-27
Wide VMU	J-27
■ THREE-DIMENSIONAL	
Micro-Form Measuring System	M-11
Quick Scope Series	M-2
Quick Vision Series	M-4 - M-12

DIGITAL READOUT AND POSITION FEEDBACK OF MACHINE TOOLS

	Page
ABSOLUTE Digimatic Scale Units	H-2 - H-5
Linear Gages	G-4 - G-18
Linear Scale	H-10 - H-32

STATISTICAL PROCESS CONTROL

	Page
Digimatic Mini-Processor DP-1VR	A-18
Input Tool	A-11
MeasurLink	A-2 - A-10
Multiplexer MIG8USB, MIG4USB	A-16
USB Input Tool Direct: USB-ITN	A-12 - A-13
U-Wave System	A-14 - A-15

MEASUREMENT IN ROLL FORMING

	Page
■ ONE-DIMENSIONAL	
ABSOLUTE Digimatic Calipers	D-2 -D-7, D-15, D-17-D-31
Black Granite Surface Plates	E-45
Bore Gages	C-20 - C-26, C-28
Dial Calipers	D-8 - D-9
Dial Height Gages	D-42
Dial Indicators	F-15 - F-32
Dial Test Indicators	F-40 - F-46
Digimatic Height Gages	D-40 - D-41, D-43 - D-44
Digimatic Indicators	F-2 - F-13
Digimatic Micrometers	B-2 - B-8, B-15, B-18, B-20 - B-24, B-27 - B-36, B-38
Digit Outside Micrometers	B-42
Laser Scan Micrometers	G-36 - G-45
Linear Gages	G-4 - G-18
Mu-Checker	G-30 - G-33
Outside Micrometers	B-11 - B-19
QM-Height	D-38 - D-39
Vernier Calipers	D-10 - D-14
Vernier Height Gages	D-45 - D-46
■ TWO-DIMENSIONAL	
Linear Height	D-36 - D-37
■ THREE-DIMENSIONAL	
Coordinate Measuring Machines (CMM)	L-3 - L-15
Micro-Form Measuring System	M-11
Quick Vision Series	M-4 - M-12
Roundtest	J-39 - J-46
Surftest	J-2 - J-13

Mitutoyo

NUMERICAL INDEX

Series No.	Description	Page
0-99		
0	Dial Indicators	F-16
1	Dial Indicators	F-17-19
1	Back-Plunger Dial Indicators	F-31,32
2	Dial Indicators	F-20-27
2	Special Dial Indicators	F-22
2	Back-Plunger Dial Indicators	F-31,32
3	Dial Indicators	F-28,29
4	Dial Indicators	F-30
7	Dial Gage Stands	F-62
7	Dial / Test Indicator & Magnetic Stand Sets	F-61
7	Magnetic Stands	F-61
7	Micro Jack	B-73
7	ABSOLUTE Digimatic / Dial Depth Gage	D-57,58
7	Thickness Gages	F-50-52
100-199		
101	Ratchet-Thimble Micrometer	B-10
101	Outside Micrometers	B-9
102	Ratchet-Thimble Micrometer	B-10
102	Outside Micrometers	B-11
103	Outside Micrometers	B-12
103	Outside Micrometers-Inch Models	B-13
103	Outside Micrometers-Inch Sets	B-14
104	Outside Micrometers-Inch	B-15
104	Outside Micrometers-Metric	B-16
105	Outside Micrometers	B-17
107	Outside Micrometers	B-19
110	Micrometer Heads	B-69
111	Spline Micrometers	B-20
112	Crimp Height Micrometers	B-22
112	Point Micrometers	B-21
113	Limit Micrometers	B-25
114	V-Anvil Micrometers	B-23
115	Spherical Face Micrometers	B-27
115	Tube Micrometers	B-28
116	Pana Micrometers	B-26
117	Uni-Mike	B-29
118	Sheet Metal Micrometers	B-30
119	Sheet Metal Micrometers	B-30
122	Blade Micrometers	B-31
123	Disk Micrometers	B-32,33
124	Gear-Tooth Micrometers	B-36
125	Screw Thread Micrometers	B-37
126	Screw Thread Micrometers	B-38
128	Depth Micrometer	D-51
129	Depth Micrometer	D-50
133	Tubular Inside Micrometers	C-11,12
137	Tubular Inside Micrometers	C-15
139	Tubular Inside Micrometers	C-16
140	Tubular Inside Micrometers	C-17
141	Inside Micrometers	C-13
142	Crimp Height Micrometers	B-22
142	Point Micrometers	B-21

Series No.	Description	Page
143	Caliper-Type Micrometers	B-45
145	Inside Micrometers	C-18
146	Groove Micrometers	B-46
147	Can Seam Micrometers	B-40
147	Hub Micrometers	B-41
147	Wire Micrometers	B-41
148	Micrometer Heads	B-58-63
149	Micrometer Heads	B-64
150	Micrometer Heads	B-65
151	Micrometer Heads	B-66
152	Micrometer Heads	B-68
152	Micrometer Heads	B-70
152	Micrometer Heads for Profile Projectors and Toolmakers' Microscopes	I-12
153	Micrometer Heads	B-67
153	Micrometer Heads	B-71
154	Small-Hole Gage Set	B-47
155	Telescoping Gage Set	B-47
156	Micrometer Stands	B-48
157	Optical Parallels	B-50
158	Optical Flats	B-50
160	Vernier Calipers	D-14
160	ABSOLUTE Digimatic & Vernier Caliper	D-15
164	Digimatic Micrometer Heads	B-56
164	Digital Micrometer Heads	B-72
167	Micrometer Standards	B-51
167	Standards for Screw Thread Micrometers	B-52
167	Standards for V-Anvil Micrometers	B-52
169	Paper Thickness Micrometers	B-33
169	Disk Micrometers	B-34,35
170	i-Checker	F-48
170	UDT-2 Dial Gage Testers	F-49
172	Accessories for Profile Projectors	I-12
172	PH-3515F	I-10,11
172	PH-A14	I-8,9
172	Workpiece Fixtures for Profile Projectors and Measuring Microscopes	I-13
174	KA-200 Counter	H-7-8
174	KLD200 Counter	H-7-8
176	MF	I-15,16
176	MF Motorized	I-17
176	MF-U	I-18,19
176	MF-U Motorized	I-20
176	TM-505B / 1005B	I-14
177	Setting Rings	C-29,30
178	Surftest Extreme SV-3000CNC	J-12
178	Surftest Extreme SV-M3000CNC	J-13
178	Surftest SJ-210	J-2
178	Surftest SJ-210 / SJ-310 Optional Accessories	J-4,5
178	Surftest SJ-310	J-3
178	Surftest SJ-410	J-6,7
178	Surftest SJ-500/P, SV-2100	J-8,9
178	Surftest SV-3300	J-10,11
180	Combination Square Set	E-34

Series No.	Description	Page
181	Magnetic V-Block	F-59
181	V-Block Sets	F-59
182	Semi-Flexible Rules	E-36
182	Standard Scales	E-32
182	Steel Rules	E-35
182	Steel Rules	E-36
182	Working Standard Scales	E-32
183	Clear Loupe	I-37
183	Pocket Comparators	I-37
183	Pocket Magnifiers	I-37
183	Zoom Loupe	I-37
184	Thickness Gages	E-37
186	Radius Gages	E-40
186	Radius Gages-Sets	E-41
187	Bevel Protractor	E-39
187	Digital Universal Protractor	E-38
187	Universal Bevel Protractor	E-39
188	Pitch Gages	E-40
191	CRYSTA-Apex EX 1200T	L-7
191	CRYSTA-Apex EX 500T / 700T / 900T	L-6
191	Crysta-Apex S 500 / 700 / 900	L-4
191	Crysta-Apex S 900 / 1200	L-5
191	CRYSTA-Apex S 1600 / 2000	L-8
192	Dial Height Gage	D-42
192	Digimatic Height Gage	D-40,41
193	Digital Outside Micrometers	B-42
196	CRYSTA-Plus M Series	L-3
197	Micrometer Heads	B-71

200-299

201	Dial Snap Gages	F-60
209	Dial Caliper Gages	F-56-58
209	Digimatic Caliper Gages	F-54,55
211	Roundtest Extreme RA-2200CNC / RA-H5200CNC	J-47,48
211	Roundtest RA-120 / 120P	J-39,40
211	Roundtest RA-1600 / 1600M	J-41,42
211	Roundtest RA-2200AS / DS / AH / DH	J-43,44
211	Roundtest RA-H5200AS / AH	J-45,46
215	Comparator Stands	F-65
215	Granite Comparator Stands	F-64
218	Contracer CV-2100	J-28,29
218	Contracer CV-3200 / CV-4500	J-30,31
223	Disk Micrometers	B-32
227	ABSOLUTE Digimatic Micrometers	B-7
227	Disk Micrometers	B-34,35
250	Micrometer Heads	B-72
264	DP-1VR	A-18
264	Input Tools	A-11
264	QM-Data200	I-23,24
293	Coolant-Proof Micrometers	B-2,3
293	Digimatic Micrometers	B-4
293	Digimatic Micrometer- MDC- Lite	B-4
293	MDH Micrometer	B-5
293	QuantuMike	B-6
293	Quickmike	B-8

Series No.	Description	Page
295	Spherical Face Micrometers	B-27
295	Tube Micrometers	B-28

300-399

302	PJ-A3000	I-2,3
303	PJ-H30	I-4,5
304	PV-5110	I-6,7
311	CERA Straight Master SM-C	E-30
311	High-Precision Square	E-33
311	Square Master	E-31
314	V-Anvil Micrometers	B-24
317	Uni-Mike	B-29
318	Litematic	G-27
323	Disk Micrometers	B-32
324	Gear-Tooth Micrometers	B-36
326	Screw Thread Micrometers	B-38
329	Depth Micrometer	D-50
331	Spline Micrometers	B-20
337	Digimatic Tubular Inside Micrometers	C-14
339	Digimatic Tubular Inside Micrometers	C-14
340	Outside Micrometers-Inch	B-15
340	Outside Micrometers-Metric	B-16
342	Crimp Height Micrometers	B-22
342	Point Micrometers	B-21
343	Caliper-Type Micrometers	B-45
345	Inside Micrometers	C-18
350	Digimatic Micrometer Heads	B-57
355	CARBapex / CARBstrato	L-15
355	FALCIO-Apex 2000 / 3000	L-11
355	STRATO-Apex 1600	L-10
355	STRATO-Apex 500 / 700 / 900	L-9
356	LEGEX 500 / 700 / 900 / 1200	L-12
359	Quick Scope Series 359 — CNC / Manual Vision Measuring System	M-14
359	Vision Unit	I-25
360	MACH KO-GA-ME	L-14
360	MACH-3A 653	L-13
360	MACH-V9106	L-13
361	Quick Image Series 361 — Non-contact 2-D Vision Measuring System	M-15
363	Hyper QV Series 363 — CNC Vision Measuring System	M-5
363	Quick Vision WLI Series 363 — CNC Video Measuring System with White Light Inferometry	M-7
363	QV ACCEL Series 363 — CNC Vision Measuring System	M-10
363	QV Apex QV Series 363 — CNC Vision Measuring System	M-3
363	QV STREAM PLUS Series 363 — CNC Vision Measuring System	M-4
363	ULTRA QV Series 363 — Ultra-High Accuracy CNC Vision Measuring System	M-9
364	UMAP Vision System TYPE2 Series 364- Micro-Form Measuring System	M-8
365	QV HYBRID TYPE1, TYPE4 SERIES 365 — CNC Vision Measuring System	M-6
368	Holtest	C-4,5
368	Holtest (Type II)	C-6,7
368	Holtest/Digimatic Holtest/Boremetic	C-10
369	Disk Micrometers	B-34,35

Mitutoyo

NUMERICAL INDEX

Series No.	Description	Page
377	MSM-400	I-33
377	MSM-400	I-34-36
378	Eyepieces	I-28
378	FS-70	I-26
378	Objectives	I-28-32
378	VMU	I-27
389	Sheet Metal Micrometers	B-30
395	Spherical Face Micrometers	B-27
395	Tube Micrometers	B-28
400-499		
406	Outside Micrometers	B-18
422	Blade Micrometers	B-31
468	Digimatic Holtest	C-2,3
468	Holtest / Digimatic Holtest / Borematic	C-10
500-599		
500	ABSOLUTE Coolant-Proof Caliper	D-4,5
500	ABSOLUTE Digimatic Caliper	D-6,7
500	ABSOLUTE Solar Caliper	D-3
500	Super Caliper-Solar Powered	D-2
505	Dial Caliper	D-8,9
506	Vernier Height Gage	D-46
510	Indicating Micrometers	B-43
511	ABSOLUTE Digimatic Bore Gage	C-27
511	Bore Gages	C-20-26
513	Contact Points and Clamp Holders	F-47
513	Dial Test Indicators	F-39-43
513	Dial Test Indicators	F-46
513	Pocket Dial Test Indicators	F-44,45
514	Vernier Height Gage	D-45
515	Auxiliary Block Kit	E-27
515	Bore Gage Zero Checker	C-29
515	CERA Caliper Checker	D-49
515	Depth Micro Checker	D-51
515	Digital Height Master	E-26
515	Height Master	E-25
515	High-Accuracy Check Master HMC-H	E-29
515	Inside Micro Checker	C-19
515	Riser Blocks	E-27
515	Universal Height Master	E-28
516	Bore Gage Calibration Kit	E-8
516	Gage Block	E-2-4
516	Inch Rectangular Gage Block Set	E-7
516	Inch Square Gage Block Set	E-17
516	Individual Inch Rectangular Gage Block	E-11
516	Individual Metric Rectangular Gage Block	E-9,10
516	Maintenance Kit for Gage Block	E-22
516	Metric Rectangular Gage Block Set	E-5,6
516	Metric Square Gage Block Set	E-16
516	Micrometer Inspection Gage Block Sets	E-8
516	Rectangular Gage Block Accessories	E-13-15
516	Square Gage Block Accessories	E-20,21
516	Step Master	E-23
517	Black Granite Surface Plate	E-45
517	Granite Surface Plate Accessories	E-44
517	Precision Granite Stands	F-66
517	Steel Stands	E-46
518	Linear Height LH-600E	D-36,37
518	QM-Height	D-38,39
519	Mu-Checker	G-30-33
519	Transfer Stands	F-63
521	Calibration Testers	F-49
523	Dial Snap Meters	B-44
523	Snap Meters	B-43
525	Formtracer CS-3200	J-18,19
525	Formtracer Extreme CS-5000CNC / CS-H5000CNC	J-20,21
525	Formtracer Extreme SV-C4500CNC	J-16,17
525	Formtracer SV-C3200 / SV-C4500	J-14,15
526	Bore Gages	C-28
527	Dial Depth Gage	D-56
527	Vernier Depth Gage	D-54,55
530	Vernier Caliper	D-10,11
531	Vernier Caliper	D-12
532	Vernier Caliper	D-13
534	Long-Jaw Vernier Caliper	D-16
536	ABSOLUTE Inside Caliper	D-30,31
536	Blade Caliper	D-25
536	Neck Caliper	D-26
536	Offset Caliper	D-22
536	Offset Centerline Caliper	D-23
536	Point Caliper	D-24
536	Scribing Caliper	D-29
536	Tube Thickness Caliper	D-27
539	Linear Scales ABS AT500	H-15
539	Linear Scales ABS AT715	H-14
539	Linear Scales AT103	H-19
539	Linear Scales AT112-F	H-21
539	Linear Scales AT113	H-20
539	Linear Scales AT116	H-22
539	Linear Scales AT181	H-16
539	Linear Scales AT203	H-24
539	Linear Scales AT211-A / AT211-B	H-26
539	Linear Scales AT216-T / AT217-TL	H-25
539	Linear Scales AT402	H-23
539	Pulse Signal Interface Unit PSU-200	H-33
542	EB Counter	G-22
542	EC Counter	A-17
542	EC Counter	F-14
542	EC Counter	G-20
542	EG Counter	G-21
542	EH Counter	G-19
542	EV Counter	G-23
542	EV Counter	G-24
542	Laser Hologage LGH-High Resolution, High Accuracy	G-17-18
542	Linear Gage LGB2-High Resolution	G-16
542	Linear Gage LGB2-Slim	G-9
542	Linear Gage LGB2-Slim w/Clamp Nut	G-8
542	Linear Gage LGB-Slim	G-7

Series No.	Description	Page
542	Linear Gage LGF	G-5
542	Linear Gage LGF-High Resolution	G-15
542	Linear Gage LGF-Z	G-6
542	Linear Gage LGK	G-4
542	Linear Gage LG-Long Range	G-10
542	Linear Gage LG-Long Range, Motorized	G-11
543	ABSOLUTE Digimatic Indicator ID-C	F-56
543	ABSOLUTE Digimatic Indicator ID-C Bore Gage	F-9
543	ABSOLUTE Digimatic Indicator ID-C Calculation Type	F-7
543	ABSOLUTE Digimatic Indicator ID-C Go/No-Go Signal Output Function	F-10
543	ABSOLUTE Digimatic Indicator ID-C Max./Min. Value Holding Type	F-8
543	ABSOLUTE Digimatic Indicator ID-F	F-12
543	ABSOLUTE Digimatic Indicator ID-H	F-11
543	ABSOLUTE Digimatic Indicator ID-N / B	F-13
543	ABSOLUTE Digimatic Indicator ID-S	F-3
543	ABSOLUTE Solar Digimatic Indicator ID-S	F-2
544	Laser Scan Micrometer Application Example	G-35
544	Laser Scan Micrometer LSM-500S	G-37
544	Laser Scan Micrometer LSM-501S	G-38
544	Laser Scan Micrometer LSM-503S	G-39
544	Laser Scan Micrometer LSM-506S	G-40
544	Laser Scan Micrometer LSM-512S	G-41
544	Laser Scan Micrometer LSM-516S	G-42
544	Laser Scan Micrometer LSM-902 / 6900	G-36
544	Laser Scan Micrometer LSM-9506	G-43
544	LSM-5200 Display Unit	G-45
544	LSM-6200 Display Unit	G-44
544	Optional Accessories for LSM	G-46-50
546	Dial Tension Gages	F-59
547	ABSOLUTE Digimatic / Dial Depth Gage	D-57,58
547	Thickness Gages	F-50-52
549	MICSYS	H-18
550	ABSOLUTE Digimatic & Vernier Caliper	D-15
551	ABSOLUTE Digimatic Caliper	D-17
552	ABSOLUTE Coolant-Proof Carbon-Fiber Caliper	D-20
552	Digimatic Carbon-Fiber Caliper	D-18,19
559	Linear Scales AT-1100	H-12
565	Gage Block Comparator GBCD-100A	E-24
565	Gage Block Comparator GBCD-250	E-24
568	Borematic	C-8,9
568	Holtest / Digimatic Holtest / Borematic	C-10
570	ABSOLUTE Digimatic Height Gage	D-43,44
571	ABSOLUTE Digimatic Depth Gage	D-55
571	ABSOLUTE Digimatic Depth Gage	D-54
571	Tire Tread Depth Gage	D-53
572	ABSOLUTE Digimatic Scale Units	H-4,5
572	SD ABSOLUTE Digimatic Scale Units	H-2
573	ABSOLUTE Back-Jaw Centerline Caliper	D-21
573	ABSOLUTE Low-Force Caliper	D-28
573	ABSOLUTE Snap Caliper	D-28
573	ABSOLUTE Inside Caliper	D-30,31
573	Blade Caliper	D-25
573	Neck Caliper	D-26
573	Offset Caliper	D-22
573	Offset Centerline Caliper	D-23
573	Point Caliper	D-24
573	Scribing Caliper	D-29
573	Tube Thickness Caliper	D-27
575	ABSOLUTE Digimatic Indicator ID-U	F-4
575	Linear Gage LGD	G-12,13
575	Linear Gage LGS	G-14
579	Fiber Scale ST-F11	H-31-32
579	Linear Scales ABS ST700	H-16
579	Linear Scales ABS AT300	H-13
579	Linear Scales ST24	H-27
579	Linear Scales ST36	H-30
579	Linear Scales ST422	H-28
579	Linear Scales ST46-EZA	H-29
700-799		
700	MyCAL-Lite	D-32
700	Quick-Mini	F-53
800-899		
810	Hardmatic HH-411	K-13
810	HM-200 Series with AVPAK Software	K-4
810	HM-210 / 220 Type A	K-3
810	HR-521(L) / 523(L)	K-9
810	HV-110 / 120	K-6,7
810	MZT-500	K-5
811	Hardmatic HH-300	K-14
900-999		
950	Digital Protractor	E-42
950	Spring Dividers and Calipers	E-33
950	Pitch Gages	E-40
950	Thickness Gages	E-37
960	Precision Levels	E-37
963	HR-320MS / 430MR / 430MS	K-10
967	Bench Center	E-44
982	Digital Hand Tachometers	E-43
982	Multiplexers – MIG-8USB, MIG-4USB	A-16
7000	Dial Indicator Crystal Setter	F-38
7000	Dial Indicator Repair Tool Kit	F-38

Mitutoyo

ALPHABETICAL INDEX

Description	Series No.	Page
A		
ABSOLUTE Back-Jaw Centerline Caliper	573	D-21
ABSOLUTE Coolant-Proof Caliper	500	D-4,5
ABSOLUTE Coolant-Proof Carbon-Fiber Caliper	552	D-20
ABSOLUTE Digimatic & Vernier Caliper	550,160	D-15
ABSOLUTE Digimatic Bore Gage	511	C-27
ABSOLUTE Digimatic Caliper	500	D-6,7
ABSOLUTE Digimatic Caliper	551	D-17
ABSOLUTE Digimatic Depth Gage	571	D-52
ABSOLUTE Digimatic Depth Gage	571	D-55
ABSOLUTE Digimatic Height Gage	570	D-43,44
ABSOLUTE Digimatic Indicator ID-C	543	F-5-10
ABSOLUTE Digimatic Indicator ID-C Bore Gage	543	F-9
ABSOLUTE Digimatic Indicator ID-C Calculation Type	543	F-7
ABSOLUTE Digimatic Indicator ID-C Go / No-Go Signal Output Function	543	F-10
ABSOLUTE Digimatic Indicator ID-C Max. /Min. Value Holding Type	543	F-8
ABSOLUTE Digimatic Indicator ID-F	543	F-12
ABSOLUTE Digimatic Indicator ID-H	543	F-11
ABSOLUTE Digimatic Indicator ID-N / B	543	F-13
ABSOLUTE Digimatic Indicator ID-S	543	F-3
ABSOLUTE Digimatic Indicator ID-U	575	F-4
ABSOLUTE Digimatic Micrometers	227	B-7
ABSOLUTE Digimatic Scale Units	572	H-4,5
ABSOLUTE Digimatic / Dial Depth Gage	547,7	D-57,58
ABSOLUTE Digimatic / Dial Depth Gage	547,7	D-58
ABSOLUTE Inside Caliper	573,536	D-30,31
ABSOLUTE Low-Force Caliper	573	D-28
ABSOLUTE Snap Caliper	573	D-28
ABSOLUTE Solar Caliper	500	D-3
ABSOLUTE Solar Digimatic Indicator ID-S	543	F-2
Accessories for Measuring Microscope		I-21,22
Accessories for Profile Projectors	172	I-12
Accessories for Quick Vision		M-14
Auxiliary Block Kit	515	E-27
B		
Back-Plunger Dial Indicators	1,2	F-31,32
Backs-Optional Accessory for Digimatic and Dial Indicators		F-33
Bench Center	967	E-44
Bevel Protractor	187	E-39
Black Granite Surface Plate	517	E-45
Blade Micrometers	422,122	B-31
Blade Caliper	573,536	D-25
Bore Gage Calibration Kit	516	E-8
Bore Gage Zero Checker	515	C-29
Bore Gages	511	C-20-26
Bore Gages	526	C-28
Borematic	568	C-8,9

Description	Series No.	Page
C		
Calibration Testers	521	F-49
Caliper-Type Micrometers	343,143	B-45
Can Seam Micrometers	147	B-40
CARBapex/CARBstrato	355	L-15
Carbide-Tipped Scriber		D-47
Center-Line Gage		D-33
CERA Caliper Checker	515	D-49
CERA Straight Master SM-C	311	E-30
Ceraston		E-22
Clear Loupe	183	I-37
CMM Probes & Change Rack Options-Motorized Probe Heads	Probes	L-21
CMM Probes & Change Rack Options-Touch-Trigger System	Probes	L-20
CMM Probing Accessories Mitutoyo ECO-FIX Kit Fixture Systems	Accessories	L-29
CMM Probing Accessories Mitutoyo Styli Kits	Accessories	L-28
CMM Surface Roughness Measuring	Probes	L-27
Color Ratchet & Color Speeder		B-49
Color Spindle Caps		F-37
Combination Square Set	180	E-34
Comparator Stands	215	F-65
Contact Points		F-34,35
Contact Points and Clamp Holders	513	F-47
Contracer CV-2100	218	J-28,29
Contracer CV-3200 / CV-4500	218	J-30,31
Coolant-Proof Micrometers	293	B-2,3
Crimp Height Micrometers	342,142,112	B-22
CRYSTA-Apex EX 1200R	191	L-7
CRYSTA-Apex EX 500T / 700T / 900T	191	L-6
Crysta-Apex S 500 / 700 / 900	191	L-4
Crysta-Apex S 900 / 1200	191	L-5
Crysta-Apex S 1600 / 2000	191	L-8
CRYSTA-Plus M Series	196	L-3
D		
Depth Base Attachment		D-33
Depth Micro Checker	515	D-51
Depth Micrometer	128	D-51
Depth Micrometer	329,129	D-50
D-EV Display Unit		G-25
Dial Caliper	505	D-8,9
Dial Caliper Gages	209	F-56,58
Dial Depth Gage	527	D-56
Dial Gage Stands	7	F-62
Dial Height Gage	192	D-42
Dial Indicator Crystal Setter	7000	F-38
Dial Indicator Repair Tool Kit	7000	F-38
Dial Indicators	0	F-16
Dial Indicators	1	F-17-19

Description	Series No.	Page
Dial Indicators	2	F-20-27
Dial Indicators	3	F-28,29
Dial Indicators	4	F-30
Dial Indicators	S	F-15
Dial Snap Gages	201	F-60
Dial Snap Meters	523	B-44
Dial Tension Gages	546	F-59
Dial Test Indicators	513	F-39-43
Dial Test Indicators	513	F-46
Dial / Test Indicator & Magnetic Stand Sets	7	F-61
Digimatic Caliper Gages	209	F-54
Digimatic Caliper Gages	209	F-55
Digimatic Carbon-Fiber Caliper	552	D-18
Digimatic Carbon-Fiber Caliper	552	D-19
Digimatic Height Gage	192	D-40
Digimatic Height Gage	192	D-41
Digimatic Holtest	468	C-2
Digimatic Holtest	468	C-3
Digimatic Micrometer	293	B-4
Digimatic Micrometer Heads	164	B-56
Digimatic Micrometer Heads	350	B-57
Digimatic Micrometer- MDC- Lite	293	B-4
Digimatic Tubular Inside Micrometers	337,339	C-14
Digit Outside Micrometers	193	B-42
Digital Hand Tachometers	982	E-43
Digital Height Master	515	E-26
Digital Micrometer Heads	164	B-72
Digital Protractor	950	E-42
Digital Readout / DRO Packages 2-3 Axis Travel		H-10
Digital Universal Protractor	187	E-38
Disk Micrometers	323,223,123	B-32,33
Disk Micrometers	369,227,169	B-34
Disk Micrometers	369,227,169	B-35
DP-1VR	264	A-18
E		
EB Counter	542	G-22
EC Counter	542	A-17
EC Counter	542	G-20
EC Counter	542	F-14
Eco-Fix Kit Form - S & L		J-52
EG Counter	542	G-21
EH Counter	542	G-19
EV Counter	542	G-23,24
Extension Bases		D-56
Eyepieces	378	I-28
F		
FALCIO-Apex 2000 / 3000	355	L-11
Fiber Scale ST-F11	579	H-31-32
Fixtures for Micrometer Heads		B-75,75
Formtracer CS-3200	525	J-18,19
Formtracer Extreme CS-5000CNC / CS-H5000CNC	525	J-20,21
Formtracer Extreme SV-C4500CNC	525	J-16,17
Formtracer SV-C3200 / SV-C4500	525	J-14,15
FS-70	378	I-26
G		
Gage Blocks	516	E-2-4
Gage Block Comparator GBCD-100A	565	E-24
Gage Block Comparator GBCD-250	565	E-24
Gage Selector 3		A-15
Gear-Tooth Micrometers	324,124	B-36
Granite Comparator Stands	215	F-64
Granite Surface Plate Accessories	517	E-44
Groove Micrometers	146	B-46
H		
Hardmatic HH-300	811	K-14
Hardmatic HH-300 Test Block Set		K-15
Hardmatic HH-411	810	K-13
Height Master	515	E-25
High-Accuracy Check Master HMC-H	515	E-29
High-Precision Square	311	E-33
HM-200 Series with AV Pak Software	810	K-4
HM-210 / 220 Type A	810	K-3
Holtest	368	C-4,5
Holtest (Type II)	368	C-6,7
Holtest / Digimatic Holtest / Borematic	368,468,568	C-10
HR-320MS / 430MR / 430MS	963	K-10
HR-521(L) / 523(L)	810	K-9
Hub Micrometers	147	B-41
HV-110 / 120	810	K-6,7
Hyper QV SERIES 363 — CNC Vision Measuring System	363	M-5
I		
i-Checker	170	F-48
Inch Rectangular Gage Block Set	516	E-7
Inch Square Gage Block Set	516	E-17
Indicating Micrometers	510	B-43
Individual Inch Rectangular Gage Block	516	E-11
Individual Inch Square Gage Block		E-19
Individual Metric Rectangular Gage Block	516	E-9,10
Individual Metric Square Gage Block		E-18
Input Tools	264	A-11
Inside Micro Checker	515	C-19
Inside Micrometers	141	C-13

Mitutoyo

ALPHABETICAL INDEX

Description	Series No.	Page
Inside Micrometers	345,145	C-18
K		
KA-200 Counter	174	H-7-8
KLD200 Counter	174	H-7-8
L		
Laser Hologage LGH-High Resolution, High Accuracy	542	G-17-18
Laser Scan Micrometer Application Example	544	G-35
Laser Scan Micrometer LSM-500S	544	G-37
Laser Scan Micrometer LSM-501S	544	G-38
Laser Scan Micrometer LSM-503S	544	G-39
Laser Scan Micrometer LSM-506S	544	G-40
Laser Scan Micrometer LSM-512S	544	G-41
Laser Scan Micrometer LSM-516S	544	G-42
Laser Scan Micrometer LSM-902 / 6900	544	G-36
Laser Scan Micrometer LSM-9506	544	G-43
Laser Scan Micrometer Selection Guide		G-34
LEGEX 500 / 700 / 900 / 1200	356	L-12
Limit Micrometers	113	B-25
Limit Stickers		F-37
Linear Gage / Display Selection Guide		G-2,3
Linear Gage LGB2-High Resolution	542	G-16
Linear Gage LGB2-Slim	542	G-9
Linear Gage LGB2-Slim w/Clamp Nut	542	G-8
Linear Gage LGB-Slim	542	G-7
Linear Gage LGD	575	G-12,13
Linear Gage LGF	542	G-5
Linear Gage LGF-High Resolution	542	G-15
Linear Gage LGF-Z	542	G-6
Linear Gage LGK	542	G-4
Linear Gage LG-Long Range	542	G-10
Linear Gage LG-Long Range, Motorized	542	G-11
Linear Gage LGS	575	G-14
Linear Height LH-600E	518	D-36,37
Linear Scale Counter Functions		H-8
Linear Scale System Guide		H-10-11
Linear Scales ABS AT300	579	H-13
Linear Scales ABS AT500	539	H-15
Linear Scales ABS AT715	539	H-14
Linear Scales ABS ST700	579	H-16
Linear Scales AT103	539	H-19
Linear Scales AT1100	559	H-12
Linear Scales AT1300	579	H-17
Linear Scales AT112-F	539	H-21
Linear Scales AT113	539	H-20
Linear Scales AT116	539	H-22
Linear Scales AT181	539	H-16
Linear Scales AT203	539	H-24
Linear Scales AT211-A / AT211-B	539	H-26
Linear Scales AT216-T / AT217-TL	539	H-25
Linear Scales AT402E	539	H-23
Linear Scales ST24	579	H-27
Linear Scales ST36	579	H-30
Linear Scales ST422	579	H-28
Linear Scales ST46-EZA	579	H-29
Lineup of Hardness Testing Machines		K-2
Litematic	318	G-27
Long-Jaw Vernier Caliper	534	D-16
LSM-5200 Display Unit	544	G-45
LSM-6200 Display Unit	544	G-44
M		
MACH KO-GA-ME	360	L-14
MACH-3A 653	360	L-13
MACH-V9106	360	L-13
Made-to-Order Block & Reference		E-23
Magnetic Stands	7	F-61
Magnetic V-Block	181	F-59
Maintenance Kit for Gage Block	516	E-22
MCOSMOS- Software for Manual / CNC Coordinate Measuring Machine		L-16,17
MDH Micrometer	293	B-5
MeasurLink®		A-2,3
MeasurLink®		A-5-10
MeasurLink®-Real Time		A-4,5
Metric Rectangular Gage Block Set	516	E-5
Metric Rectangular Gage Block Set	516	E-6
Metric Square Gage Block Set	516	E-16
MF	176	I-15,16
MF Motorized	176	I-17
MF-U	176	I-18,19
MiCAT Planner Automatic Measurement Program Generation Software		L-18,19
MF-U Motorized	176	I-20
Micro Jack	7	B-73
Micrometer Head Selection Guide		B-55
Micrometer Heads	110	B-69
Micrometer Heads	148	B-58-63
Micrometer Heads	149	B-64
Micrometer Heads	150	B-65
Micrometer Heads	151	B-66
Micrometer Heads	152	B-68
Micrometer Heads	152	B-70
Micrometer Heads	153	B-67
Micrometer Heads	153	B-71
Micrometer Heads	197	B-71
Micrometer Heads	250	B-72
Micrometer Heads for Profile Projectors and Toolmakers' Microscopes	152	I-12
Micrometer Inspection Gage Block Sets	516	E-8
Micrometer Oil		B-49
Micrometer Standards	167	B-51

Description	Series No.	Page
Micrometer Stands	156	B-48
MICSYS	549	H-18
Mitutoyo CMM Accuracy Statements		L-2
MSM-400	377	I-33-36
MSURF Software		L-24,25
Mu-Checker	519	G-30-33
Multiplexers – MIG-8USB, MIG-4USB	982	A-16
MyCAL-Lite	700	D-32
MZT-500	810	K-5
N		
Neck Caliper	573,536	D-26
Non-Contact CMM Probe Options QVP Quick Vision Probe		L-26
Non-Contact CMM Probe Options SurfaceMeasure 606 / 610 / 1010 / 606T		L-22,23
O		
Objectives	378	I-28-32
Offset Caliper	573,536	D-22
Offset Centerline Caliper	573,536	D-23
Optical Flats	158	B-50
Opti-Fix Kits		M-15-17
Optical Parallels	157	B-50
Optional Accessories for Automatic Measurement		J-24
Optional Accessories for Automatic Measurement		J-35
Optional Accessories for Contracer / Formtracer		J-36
Optional Accessories for Height Gage		D-44
Optional Accessories for LSM	544	G-42
Optional Accessories for Rockwell/Rockwell Superficial Hardness Testing Machine		K-11,12
Optional Accessories for Roundtest		J-50,51
Optional Accessories for Surftest / Formtracer		J-25
Optional Accessories Micro-Vickers / Vickers Hardness Testing Machine		K-8
Optional Arms and Styli for Contour Measurement		J-32-34
Optional Arms and Styli for Contour Measurement		J-37,38
Optional Styli for Roundtest		J-49
Optional Styli for Surface Roughness Measurement		J-22,23
Outside Micrometers	101	B-9
Outside Micrometers	102	B-11
Outside Micrometers	103	B-12
Outside Micrometers	105	B-17
Outside Micrometers	107	B-19
Outside Micrometers	406	B-18
Outside Micrometers-Inch	340,104	B-15
Outside Micrometers-Inch Models	103	B-13
Outside Micrometers-Inch Sets	103	B-14
Outside Micrometers-Metric	340,104	B-16
P		
Pana Micrometers	116	B-26
Paper Thickness Micrometers	169	B-33
PH-3515F	172	I-10,11
PH-A14	172	I-8,9
Pitch Gages	188,950	E-40
PJ-A3000	302	I-2,3
PJ-H30	303	I-4,5
Pocket Comparators	183	I-37
Pocket Magnifiers	183	I-37
Pocket Dial Test Indicators	513	F-44,45
Point Caliper	573,536	D-24
Point Micrometers	342,142,112	B-21
Precision Granite Stands	517	F-66
Precision Lead Screw		B-73
Precision Levels	960	E-37
Pulse Signal Interface Unit PSU-200	539	H-33
PV-5110	304	I-6,7
Q		
QM-Data200	264	I-23,24
QM-Height	518	D-38,39
QuantuMike	293	B-6
Quick Guide to Precision Measuring Instruments- Surftest		J-26,27
Quick Guide to Precision Measuring Instruments- Contour		J-37,38
Quick Guide to Precision Measuring Instruments- Roundtest		J-53,54
Quick Guide to Precision Measuring Instruments- Hardness Testing Machines		K-16-17
Quick Guide to Precision Measuring Instruments- Laser Scan Micrometers		G-51
Quick Guide to Precision Measuring Instruments- Linear Gages		G-28-29
Quick Guide to Precision Measuring Instruments- Linear Scales		H-34
Quick Guide to Precision Measuring Instruments- Vision Measuring Machines		M-18,19
Quick Guide to Precision Measuring Instruments- Calipers		D-34,35
Quick Guide to Precision Microscopes		I-38-40
Quick Image Series 361 — Non-Contact 2-D Vision Measuring System	361	M-3
Quick Scope Series 359 — CNC / Manual Vision Measuring System	359	M-2
Quick Vision Active Compact CNC Vision Measuring Systems		M-4
Quick Vision with Touch-Trigger Probe		M-13
Quick Vision WLI SERIES 363 — CNC Video Measuring System with White Light Inferometry	363	M-9
Quickmike	293	B-8
Quick-Mini	700	F-53
Quill Kit with ABSOLUTE Encoder		H-6
QV ACCEL Series 363 — CNC Vision Measuring System	363	M-12
QV Apex QV Series 363 — CNC Vision Measuring System	363	M-5
QV HYPER Series 363 — High-Accuracy CNC Vision Measuring System	363	M-7
QV HYBRID TYPE1, TYPE4 Series 365 — CNC Vision Measuring System	365	M-8
QV STREAM PLUS SERIES 363 — CNC Vision Measuring System	363	M-6

Mitutoyo

ALPHABETICAL INDEX

Description	Series No.	Page
R		
Radius Gages	186	E-40
Radius Gages-Sets	186	E-41
Ratchet Thimble Micrometer	101,102	B-10
Rectangular Gage Block Accessories	516	E-13-15
Rectangular Gage Block with CTE		E-12
Riser Blocks	515	E-27
Roundtest Extreme RA-2200CNC / RA-H5200CNC	211	J-47,48
Roundtest RA-120 / 120P	211	J-39,40
Roundtest RA-1600 / 1600M	211	J-41,42
Roundtest RA-2200AS / DS / AH / DH	211	J-43,44
Roundtest RA-H5200AS / AH	211	J-45,46
S		
Screw Thread Micrometers	125	B-37
Screw Thread Micrometers	326,126	B-38
Scribing Caliper	573,536	D-29
SD ABSOLUTE Digimatic Scale Units	572	H-2
Semi-Flexible Rules	182	E-36
SENSORPAK		G-26
Setting Rings	177	C-29,30
Sheet Metal Micrometers	389,119,118	B-30
Small-Hole Gage Set	154	B-47
Snap Meters	523	B-43
SPC Connecting Cables		A-19
Special Dial Indicators	2	F-22
Spherical Face Micrometers	395,295,115	B-27
Spindle Attachment Tip		B-49
Spindle Lifting Lever and Cable		F-36
Spline Micrometers	331,111	B-20
Spring Dividers and Calipers	950	E-33
Square Gage Block Accessories	516	E-20,21
Square Master	311	E-31
Standard Scales	182	E-32
Standards for Screw Thread Micrometers	167	B-52
Standards for V-Anvil Micrometers	167	B-52
Steel Rules	182	E-35
Steel Rules	182	E-36
Steel Stands	517	E-46
Step Master	516	E-23
STRATO-Apex 1600	355	L-10
STRATO-Apex 500/700/900	355	L-9
Super Caliper-Solar Powered	500	D-2
Surftest Extreme SV-3000CNC	178	J-12
Surftest Extreme SV-M3000CNC	178	J-13
Surftest SJ-210	178	J-2
Surftest SJ-210 / SJ-310 Optional Accessories	178	J-4,5
Surftest SJ-310	178	J-3
Surftest SJ-410	178	J-6,7
Surftest SJ-500/P, SV-2100	178	J-8,9
Surftest SV-3200	178	J-10,11
T		
Telescoping Gage Set	155	B-47
Thickness Gages	950,184	E-37
Thickness Gages	547,7	F-50-52
Tire-Tread Depth Gage	571	D-53
TM-505B / 1005B	176	I-14
Tool Kits		B-53,54
Transfer Stands	519	F-63
Tube Micrometers	395,295,115	B-28
Tube Thickness Caliper	573,536	D-27
Tubular Inside Micrometers	133	C-11
Tubular Inside Micrometers	133	C-12
Tubular Inside Micrometers	137	C-15
Tubular Inside Micrometers	139	C-16
Tubular Inside Micrometers	140	C-17
U		
UDT-2 Dial Gage Testers	170	F-49
ULTRA QV Series 363 — Ultra-High Accuracy CNC Vision Measuring System	363	M-10
UMAP Vision System TYPE2 Series 364- Micro-Form Measuring System	364	M-11
Uni-Mike	317,117	B-29
Universal Bevel Protractor	187	E-39
Universal Height Master	515	E-28
USB Input Tool Direct: USB-ITN		A-12,13
U-WAVE		A-14,15
V		
V-Anvil Micrometers	314,114	B-23,24
V-Block Sets	181	F-59
Vernier Caliper	160	D-14
Vernier Caliper	530	D-10,11
Vernier Caliper	531	D-12
Vernier Caliper	532	D-13
Vernier Depth Gage	527	D-54,55
Vernier Height Gage	506	D-46
Vernier Height Gage	514	D-45
Vision Unit	359	I-25
VMU	378	I-27
W		
Wire Micrometers	147	B-41
Working Standard Scales	182	E-32
Workpiece Fixtures for Profile Projectors and Measuring Microscopes	172	I-13
Z		
Zoom Loupe	183	I-37
3-Wire Thread Measuring System		B-39



In the Spirit of Mitutoyo

To become a complete man, one must acquire Wisdom, Benevolence and Valor. With Wisdom only, one tends to be cold. Benevolence alone makes one weaker. With valor only, one may reach beyond his capabilities. When the three qualities are combined, however, one will become a complete man. Similarly, success in enterprise lies in the knowledge of Heaven, Earth and Man. Business will succeed only when these factors, "heavensent" chances, natural opportunities, and harmony of man are present. Without even one factor, success is remote. In Buddhism, Butsu (Buddha), Po (Doctrine) and So (Priest) are three principle treasures for its promotion of the teaching. In Christianity, God, Bible and Minister.

The word MITUTOYO signifies three abundances. "Mitsu" means three, while "Toyo" stands for a state of abundance. The name MITUTOYO was selected, with a sincere wish to see more complete men, to create a prosperous enterprise and to introduce righteous religion to all, along with the lasting wish for a peaceful world and fulfillment of meaningful life.



Mitutoyo Quality

Mitutoyo America Corporation

965 Corporate Blvd.
Aurora, Illinois 60502
Phone: (630) 820-9666
Fax: (630) 978-3501
Email: info@mitutoyo.com
www.mitutoyo.com

For customer support call toll free:
1-888-MITUTOYO (1-888-648-8869)

© 2016 Mitutoyo America Corporation

Distributed by: